HOW TO USE THIS MANUAL

IN001–08

GENERAL INFORMATION

1. INDEX

An INDEX is provided on the first page of each section to guide you to the item to be repaired. To assist you in finding your way through the manual, the Section Title and major heading are given at the top of every page.

2. GENERAL DESCRIPTION

At the beginning of each section, a General Description is given that pertains to all repair operations contained in that section.

Read these precautions before starting any repair task.

3. TROUBLESHOOTING

TROUBLESHOOTING tables are included for each system to help you diagnose the problem and find the cause. The fundamentals of how to proceed with troubleshooting are described on page IN–8.

Be sure to read this before performing troubleshooting.

4. PREPARATION

Preparation lists the SST (Special Service Tools), recommended tools, equipment, lubricant and SSM (Special Service Materials) which should be prepared before beginning the operation and explains the purpose of each one.

5. REPAIR PROCEDURES

Most repair operations begin with an overview illustration. It identifies the components and shows how the parts fit together.

Example:

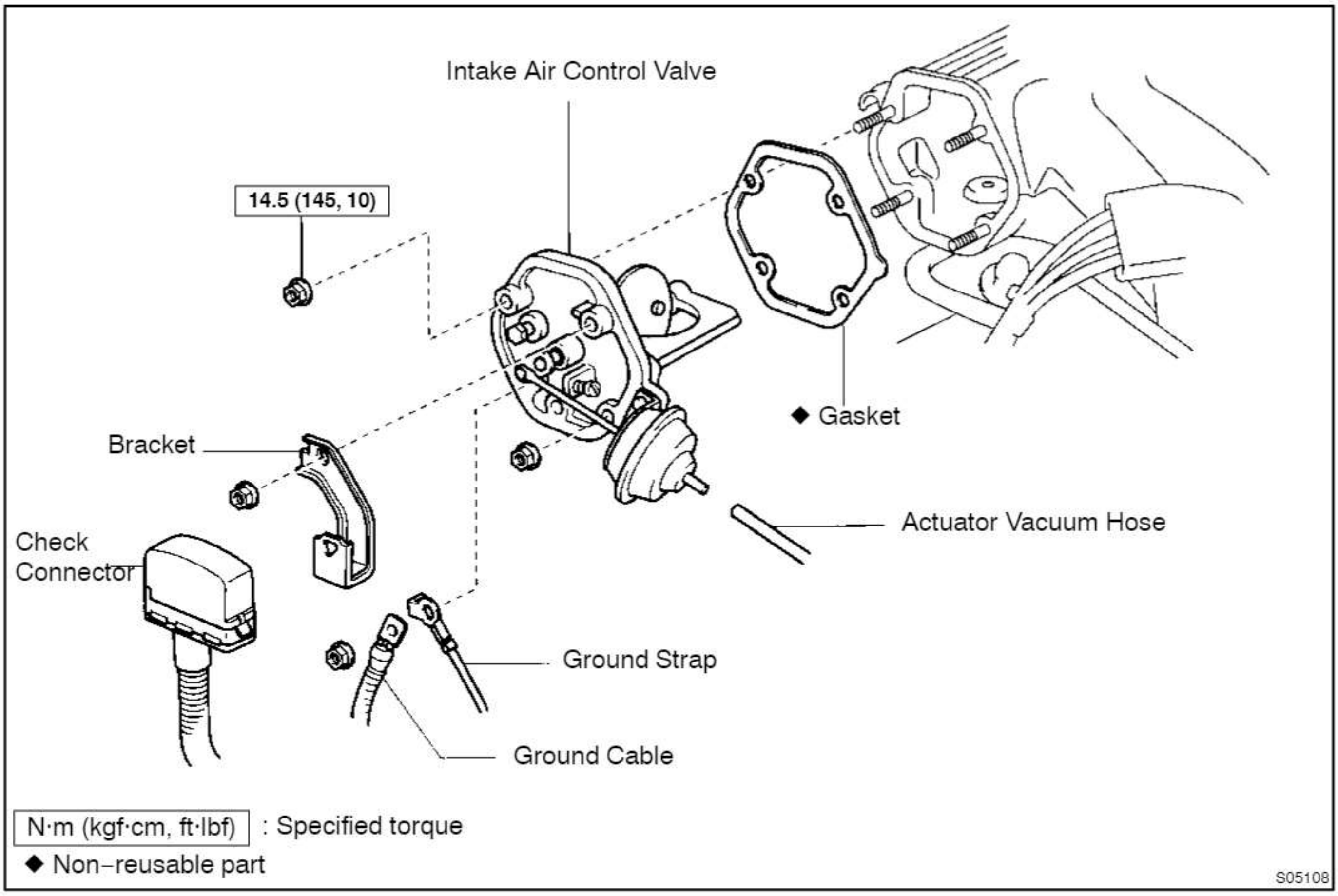

The procedures are presented in a step–by–step format:

- The illustration shows what to do and where to do it.
- The task heading tells what to do.
- The detailed text tells how to perform the task and gives other information such as specifications and warnings.

Example:

Illustration:
what to do and where

Task heading : what to do

21. CHECK PISTON STROKE OF OVERDRIVE BRAKE

(a) Place SST and a dial indicator onto the overdrive brake Piston as shown in the illustration.

SST 09350–30020 (09350–06120)

Set part No. *Component part No.*

Detailed text : how to do task

(b) Measure the stroke applying and releasing the compressed air (392 — 785 kPa, 4 — 8 kgf/cm^2 or 57 — 114 psi) as shown in the illustration.

Piston stroke: 1.40 — 1.70 mm (0.0551 — 0.0669 in.)

Specification

This format provides the experienced technician with a FAST TRACK to the information needed. The upper case task heading can be read at a glance when necessary, and the text below it provides detailed information. Important specifications and warnings always stand out in bold type.

6. REFERENCES

References have been kept to a minimum. However, when they are required you are given the page to refer to.

7. SPECIFICATIONS

Specifications are presented in bold type throughout the text where needed. You never have to leave the procedure to look up your specifications. They are also found in Service Specifications section for quick reference.

8. CAUTIONS, NOTICES, HINTS:

- CAUTIONS are presented in bold type, and indicate there is a possibility of injury to you or other people.
- NOTICES are also presented in bold type, and indicate the possibility of damage to the components being repaired.
- HINTS are separated from the text but do not appear in bold. They provide additional information to help you perform the repair efficiently.

9. SI UNIT

The UNITS given in this manual are primarily expressed according to the SI UNIT (International System of Unit), and alternately expressed in the metric system and in the English System.

Example:

Torque: 30 N·m (310 kgf·cm, 22 ft·lbf)

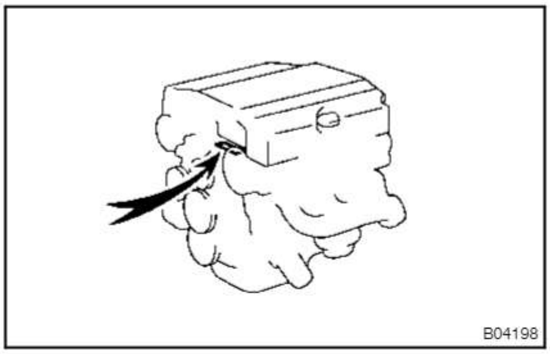

IDENTIFICATION INFORMATION

IN00Q–06

ENGINE SERIAL NUMBER

The engine serial number is stamped on the engine block as shown.

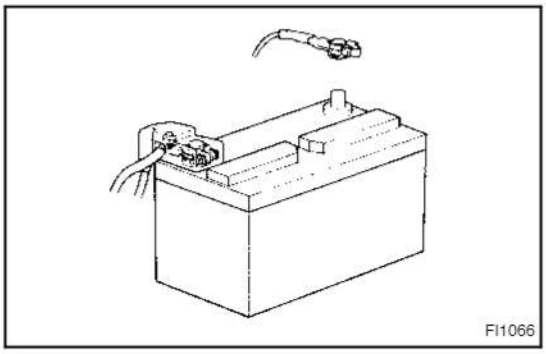

REPAIR INSTRUCTIONS

GENERAL INFORMATION

IN0BX–01

BASIC REPAIR HINT

(a) Use fender, seat and floor covers to keep the vehicle clean and prevent damage.

(b) During disassembly, keep parts in the appropriate order to facilitate reassembly.

(c) Observe the following:

(1) Before performing electrical work, disconnect the negative (–) terminal cable from the battery.

(2) If it is necessary to disconnect the battery for inspection or repair, always disconnect the negative (–) terminal cable which is grounded to the vehicle body.

(3) To prevent damage to the battery terminal, loosen the cable nut and raise the cable straight up without twisting or prying it.

(4) Clean the battery terminals and cable ends with a clean shop rag. Do not scrape them with a file or other abrasive objects.

(5) Install the cable ends to the battery terminals with the nut loose, and tighten the nut after installation. Do not use a hammer to tap the cable ends onto the terminals.

(6) Be sure the cover for the positive (+) terminal is properly in place.

(d) Check hose and wiring connectors to make sure that they are secure and correct.

(e) Non–reusable parts

(1) Always replace cotter pins, gaskets, O–rings and oil seals etc. with new ones.

(2) Non–reusable parts are indicated in the component illustrations by the "◆" symbol.

(f) Precoated parts

Precoated parts are bolts and nuts, etc. that are coated with a seal lock adhesive at the factory.

(1) If a precoated part is retightened, loosened or caused to move in any way, it must be recoated with the specified adhesive.

(2) When reusing precoated parts, clean off the old adhesive and dry with compressed air. Then apply the specified seal lock adhesive to the bolt, nut or threads.

(3) Precoated parts are indicated in the component illustrations by the "★" symbol.

(g) When necessary, use a sealer on gaskets to prevent leaks.

(h) Carefully observe all specifications for bolt tightening torques. Always use a torque wrench.

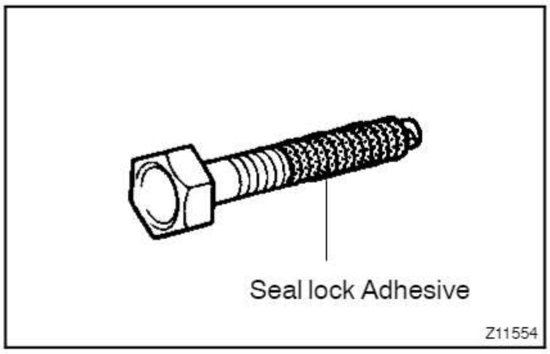

(i) Use of special service tools (SST) and special service materials (SSM) may be required, depending on the nature of the repair. Be sure to use SST and SSM where specified and follow the proper work procedure. A list of SST and SSM can be found in section PP (Preparation) in this manual.

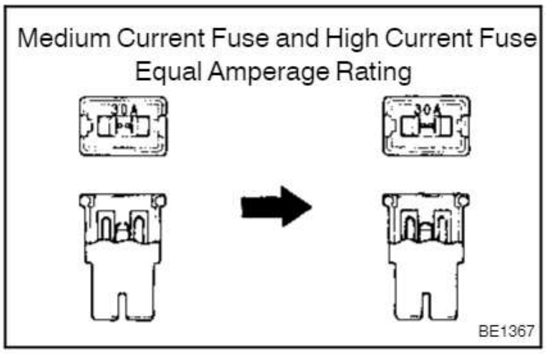

BE1367

(j) When replacing fuses, be sure the new fuse has the correct amperage rating. DO NOT exceed the rating or use one with a lower rating.

Illustration	Symbol	Part Name	Abbreviation
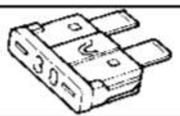 BE5594	 IN0365	FUSE	FUSE
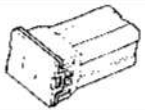 BE5595	 IN0366	MEDIUM CURRENT FUSE	M–FUSE
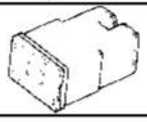 BE5596	 IN0367	HIGH CURRENT FUSE	H–FUSE
 BE5597	 IN0367	FUSIBLE LINK	FL
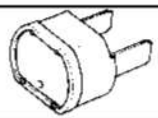 BE5598	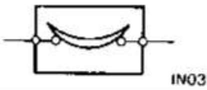 IN0368	CIRCUIT BREAKER	CB

V00076

(k) Care must be taken when jacking up and supporting the vehicle. Be sure to lift and support the vehicle at the proper locations.
  (1) If the vehicle is to be jacked up only at the front or rear end, be sure to block the wheels at the opposite end in order to ensure safety.
  (2) After the vehicle is jacked up, be sure to support it on stands. It is extremely dangerous to do any work on a vehicle raised on a jack alone, even for a small job that can be finished quickly.

(l) Observe the following precautions to avoid damage to the following parts:
   (1) Do not open the cover or case of the ECU unless absolutely necessary. (If the IC terminals are touched, the IC may be destroyed by static electricity.)

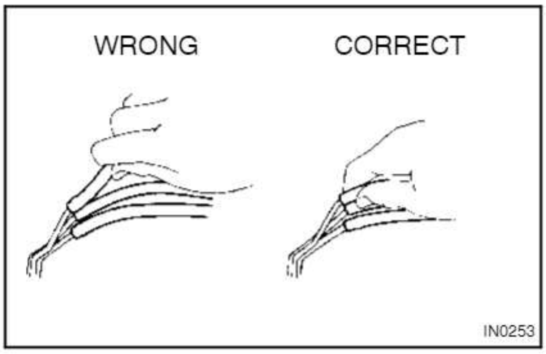

IN0253

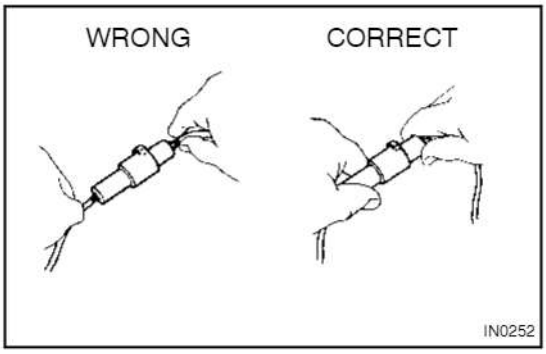

IN0252

   (2) To disconnect vacuum hoses, pull on the end, not the middle of the hose.
   (3) To pull apart electrical connectors, pull on the connector itself, not the wires.
   (4) Be careful not to drop electrical components, such as sensors or relays. If they are dropped on a hard floor, they should be replaced and not reused.
   (5) When steam cleaning an engine, protect the electronic components, air filter and emissions–related components from water.
   (6) Never use an impact wrench to remove or install temperature switches or temperature sensors.
   (7) When checking continuity at the wire connector, insert the tester probe carefully to prevent terminals from bending.
   (8) When using a vacuum gauge, never force the hose onto a connector that is too large. Use a step–down adapter instead. Once the hose has been stretched, it may leak.

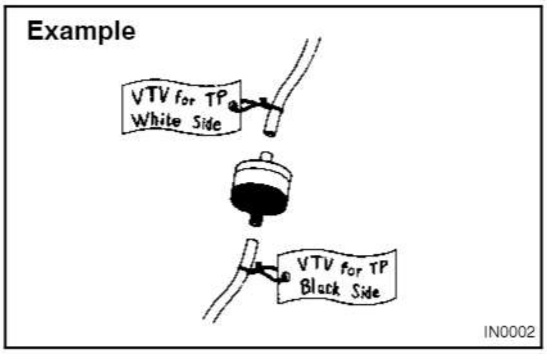

IN0002

(m) Tag hoses before disconnecting them:
   (1) When disconnecting vacuum hoses, use tags to identify how they should be reconnected.
   (2) After completing a job, double check that the vacuum hoses are properly connected. A label under the hood shows the proper layout.

(n) Unless otherwise stated, all resistance is measured at an ambient temperature of 20°C (68°F). Because the resistance may be outside specifications if measured at high temperatures immediately after the vehicle has been running, measurements should be made when the engine has cooled down.

FOR ALL OF VEHICLES

PRECAUTION

1. FOR VEHICLES EQUIPPED WITH A CATALYTIC CONVERTER

CAUTION:

If large amounts of unburned gasoline flow into the converter, it may overheat and create a fire hazard. To prevent this, observe the following precautions and explain them to your customer.

(a) Use only unleaded gasoline

(b) Avoid prolonged idling
Avoid running the engine at idle speed for more than 20 minutes.

(c) Avoid spark jump test
  (1) Perform spark jump test only when absolutely necessary. Perform this test as rapidly as possible.
  (2) While testing, never race the engine.

(d) Avoid prolonged engine compression measurement
Engine compression tests must be done as rapidly as possible.

(e) Do not run engine when fuel tank is nearly empty
This may cause the engine to misfire and create an extra load on the converter.

(f) Avoid coasting with ignition turned off and prolonged braking

(g) Do not dispose of used catalyst along with parts contaminated with gasoline or oil

2. IF VEHICLE IS EQUIPPED WITH MOBILE COMMUNICATION SYSTEM

For vehicles with mobile communication systems such as two–way radios and cellular telephones, observe the following precautions.

  (1) Install the antenna as far as possible away from the ECU and sensors of the vehicle's electronic system.
  (2) Install the antenna feeder at least 20 cm (7.87 in.) away from the ECU and sensors of the vehicle's electronics systems. For details about ECU and sensors locations, refer to the section on the applicable component.
  (3) Do not wind the antenna feeder together with the other wiring. As much as possible, also avoid running the antenna feeder parallel with other wire harnesses.
  (4) Confirm that the antenna and feeder are correctly adjusted.
  (5) Do not install powerful mobile communications system.

3. FOR USING HAND–HELD TESTER

CAUTION:

Observe the following for safety reasons:

- **Before using the hand–held tester, the hand–held tester's operator manual should be read throughly.**
- **Be sure to route all cables securely when driving with the hand–held tester connected to the vehicle. (i.e. Keep cables away from feet, pedals, steering wheel and shift lever.)**
- **Two persons are required when test driving with the hand–held tester, one person to drive the vehicle and one person to operate the hand–held tester.**

HOW TO TROUBLESHOOT ECU CONTROLLED SYSTEMS

IN005–05

GENERAL INFORMATION

A large number of ECU controlled systems are used in the LAND CRUISER (Station Wagon). In general, the ECU controlled system is considered to be a very intricate system requiring a high level of technical knowledge and expert skill to troubleshoot. However, the fact is that if you proceed to inspect the circuits one by one, troubleshooting of these systems is not complex. If you have adequate understanding of the system and a basic knowledge of electricity, accurate diagnosis and necessary repair can be performed to locate and fix the problem. This manual is designed through emphasis of the above standpoint to help service technicians perform accurate and effective troubleshooting, and is compiled for the following major ECU controlled systems:

System	Page
1. Engine	DI–1
2. Sub Fuel Tank System	DI–131

The troubleshooting procedure and how to make use of it are described on the following pages.

HOW TO PROCEED WITH TROUBLESHOOTING

Carry out troubleshooting in accordance with the procedure on the following page. Here, only the basic procedure is shown. Details are provided in each section, showing the most effective methods for each circuit. Confirm the troubleshooting procedures first for the relevant circuit before beginning troubleshooting of that circuit.

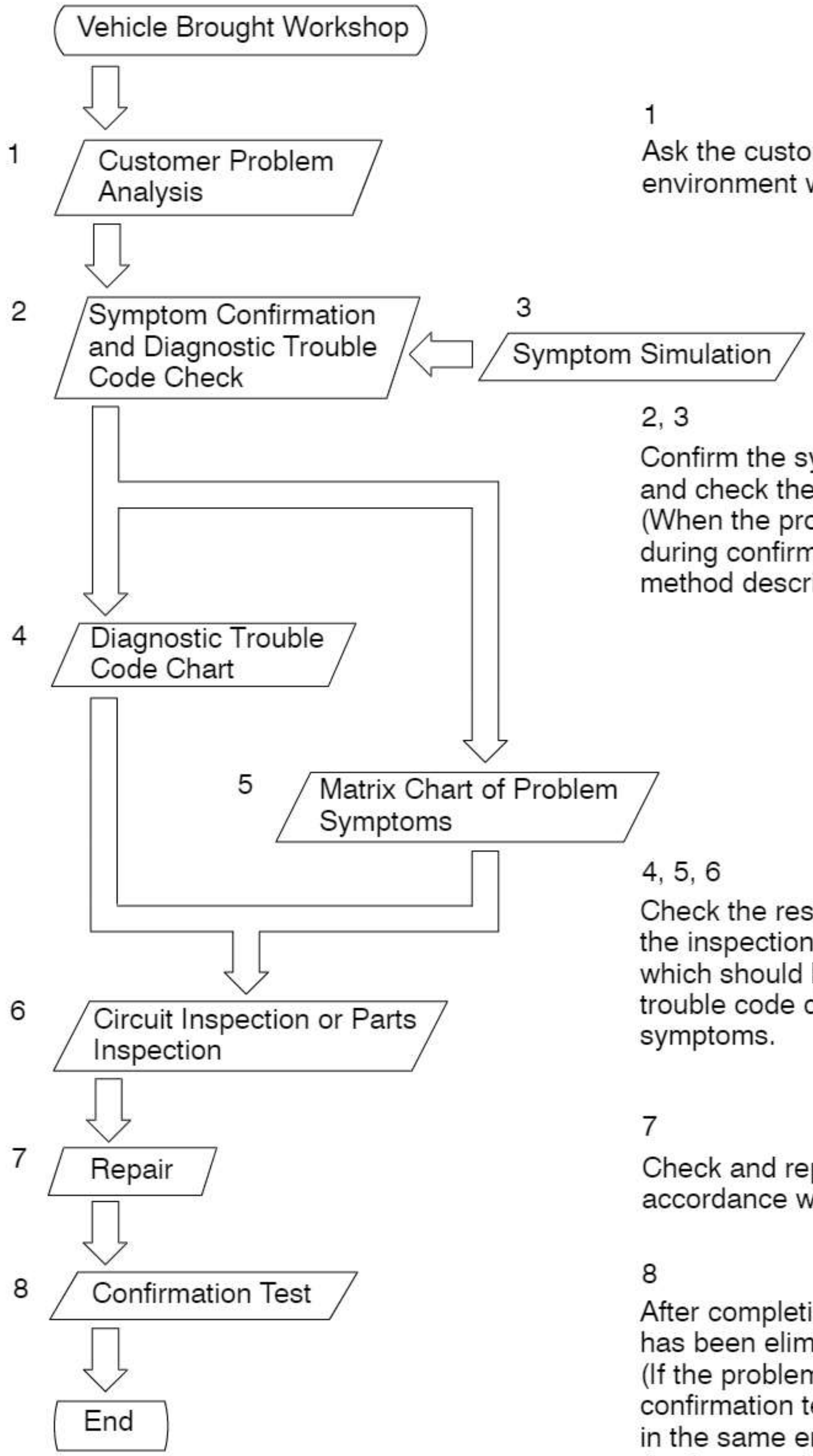

1

Ask the customer about the conditions and the environment when the problem occurred.

2, 3

Confirm the symptoms and the problem conditions, and check the diagnostic trouble codes.
(When the problem symptoms do not appear during confirmation, use the symptom simulation method described later on.)

4, 5, 6

Check the results obtain in Step 2, then confirm the inspection procedure for the system or the part which should be checked using the diagnostic trouble code chart or the matrix chart of problem symptoms.

7

Check and repair the affected system or part in accordance with the instructions in Step 6.

8

After completing repairs, confirm that the problem has been eliminated.
(If the problem is not reproduced, perform the confirmation test under the same conditions and in the same environment as when it occurred for the first time.)

1. CUSTOMER PROBLEM ANALYSIS

In troubleshooting, the problem symptoms must be confirmed accurately and all preconceptions must be cleared away in order to give an accurate judgment. To ascertain just what the problem symptoms are, it is extremely important to ask the customer about the problem and the conditions at the time it occurred.

Important Point in the Problem Analysis:

The following 5 items are important points in the problem analysis. Past problems which are thought to be unrelated and the repair history, etc. may also help in some cases, so as much information as possible should be gathered and its relationship with the problem symptoms should be correctly ascertained for reference in troubleshooting. A customer problem analysis table is provided in the troubleshooting section for each system for your use.

Important Points in the Customer Problem Analysis

- What ––––– Vehicle model, system name
- When ––––– Date, time, occurrence frequency
- Where ––––– Road conditions
- Under what conditions? ––––– Running conditions, driving conditions, weather conditions
- How did it happen? ––––– Problem symptoms

(Sample) Engine control system check sheet.

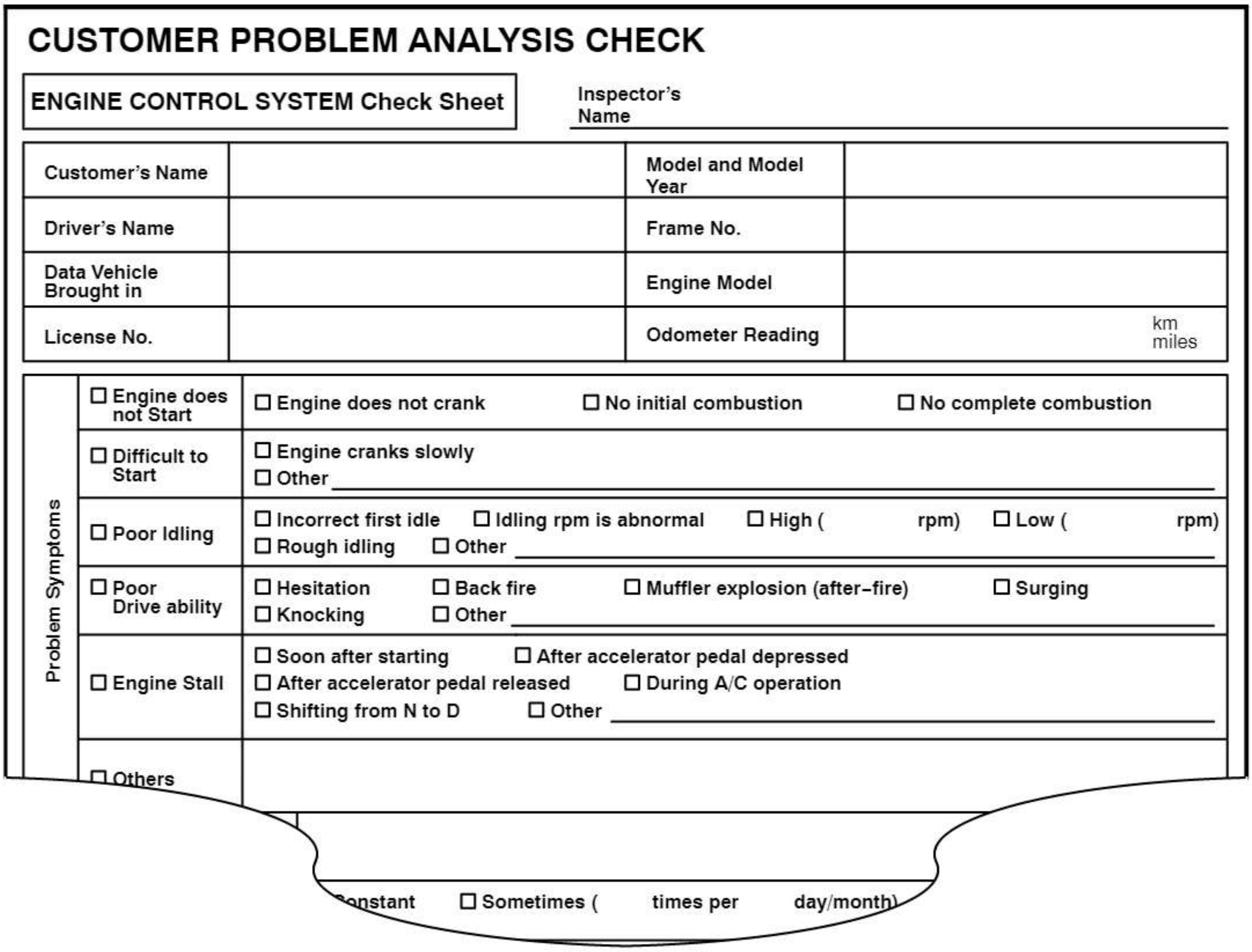

CUSTOMER PROBLEM ANALYSIS CHECK

ENGINE CONTROL SYSTEM Check Sheet

Inspector's Name

Customer's Name		**Model and Model Year**	
Driver's Name		**Frame No.**	
Data Vehicle Brought in		**Engine Model**	
License No.		**Odometer Reading**	km miles

Problem Symptoms	☐ **Engine does not Start**	☐ **Engine does not crank** ☐ **No initial combustion** ☐ **No complete combustion**
	☐ **Difficult to Start**	☐ **Engine cranks slowly** ☐ **Other**
	☐ **Poor Idling**	☐ **Incorrect first idle** ☐ **Idling rpm is abnormal** ☐ **High (rpm)** ☐ **Low (rpm)** ☐ **Rough idling** ☐ **Other**
	☐ **Poor Drive ability**	☐ **Hesitation** ☐ **Back fire** ☐ **Muffler explosion (after–fire)** ☐ **Surging** ☐ **Knocking** ☐ **Other**
	☐ **Engine Stall**	☐ **Soon after starting** ☐ **After accelerator pedal depressed** ☐ **After accelerator pedal released** ☐ **During A/C operation** ☐ **Shifting from N to D** ☐ **Other**
	☐ **Others**	

onstant ☐ **Sometimes (times per day/month)**

2. SYMPTOM CONFIRMATION AND DIAGNOSTIC TROUBLE CODE CHECK

The diagnostic system in the LAND CRUISER fulfills various functions. The first function is the Diagnostic Trouble Code Check in which a malfunction in the signal circuits to the ECU is stored in code in the ECU memory at the time of occurrence, to be output by the technician during troubleshooting. Another function is the Input Signal Check which checks if the signals from various switches are sent to the ECU correctly. By using these check functions, the problem areas can be narrowed down quickly and troubleshooting can be performed effectively. Diagnostic functions are incorporated in the following systems in the LAND CRUISER.

System	Diagnostic Trouble Code Check	Input Signal Check (Sensor Check)	Other Diagnosis Function
Engine	○ (with Check Mode)	○	Diagnostic Test Mode
Sub Fuel Tank System	○		

In diagnostic trouble code check, it is very important to determine whether the problem indicated by the diagnostic trouble code is still occurring or occurred in the past but returned to normal at present. In addition, it must be checked in the problem symptom check whether the malfunction indicated by the diagnostic trouble code is directly related to the problem symptom or not. For this reason, the diagnostic trouble codes should be checked before and after the symptom confirmation to determine the current conditions, as shown in the table below. If this is not done, it may, depending on the case, result in unnecessary troubleshooting for normally operating systems, thus making it more difficult to locate the problem, or in repairs not pertinent to the problem. Therefore, always follow the procedure in correct order and perform the diagnostic trouble code check.

DIAGNOSTIC TROUBLE CODE CHECK PROCEDURE

Diagnostic Trouble Code Check (Make a note of and then clear)	**Confirmation of Symptoms**	**Diagnostic Trouble Code Check**	**Problem Condition**
Diagnostic Trouble Code Display	Problem symptoms exist	Same diagnostic trouble code is displayed	Problem is still occurring in the diagnostic circuit
		Normal code is displayed	The problem is still occurring in a place other than in the diagnostic circuit. (The diagnostic trouble code displayed first is either for a past problem or it is a secondary problem.)
	No problem symptoms exist		The problem occurred in the diagnostic circuit in the past.
Normal Code Display	Problem symptoms exist	Normal code is displayed	The problem is still occurring in a place other than in the diagnostic circuit.
	No problem symptoms exist	Normal code is displayed	The problem occurred in a place other than in the diagnostic circuit in the past.

Taking into account the above points, a flow chart showing how to proceed with troubleshooting using the diagnostic trouble code check is shown below. This flow chart shows how to utilize the diagnostic trouble code check effectively, then by carefully checking the results, indicates how to proceed either to diagnostic trouble code troubleshooting or to troubleshooting of problem symptoms.

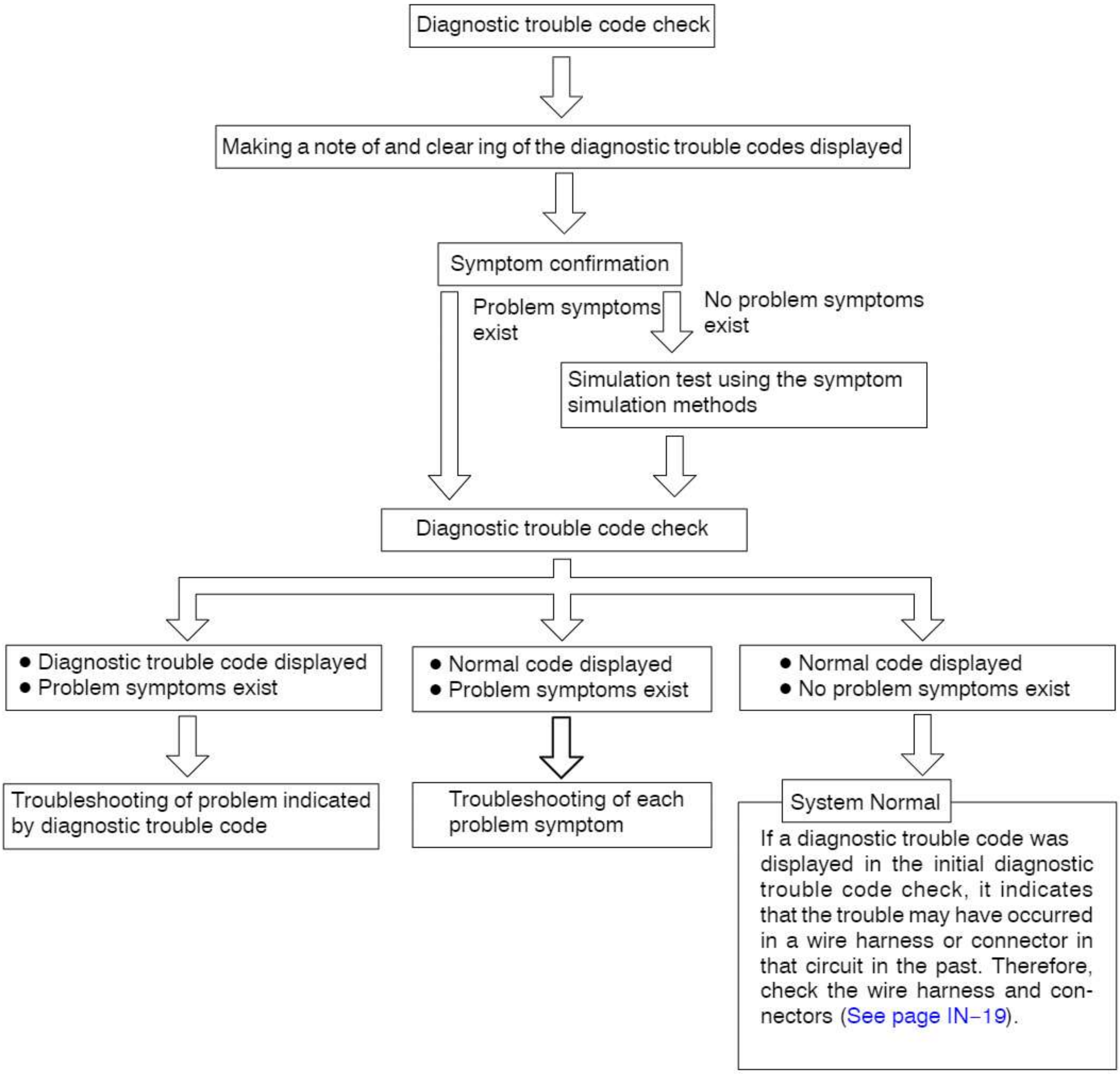

If a diagnostic trouble code was displayed in the initial diagnostic trouble code check, it indicates that the trouble may have occurred in a wire harness or connector in that circuit in the past. Therefore, check the wire harness and connectors (See page IN–19).

3. SYMPTOM SIMULATION

The most difficult case in troubleshooting is when there are no problem symptoms occurring. In such cases, a thorough customer problem analysis must be carried out, then simulate the same or similar conditions and environment in which the problem occurred in the customer's vehicle. No matter how much experience a technician has, or how skilled he may be, if he proceeds to troubleshoot without confirming the problem symptoms he will tend to overlook something important in the repair operation and make a wrong guess somewhere, which will only lead to a standstill. For example, for a problem which only occurs when the engine is cold, or for a problem which occurs due to vibration caused by the road during driving, etc., the problem can never be determined so long as the symptoms are confirmed with the engine hot condition or the vehicle at a standstill. Since vibration, heat or water penetration (moisture) are likely causes for problems which are difficult to reproduce, the symptom simulation tests introduced here are effective measures in that the external causes are applied to the vehicle in a stopped condition.

Important Points in the Symptom Simulation Test:

In the symptom simulation test, the problem symptoms should of course be confirmed, but the problem area or parts must also be found out. To do this, narrow down the possible problem circuits according to the symptoms before starting this test and connect a tester beforehand. After that, carry out the symptom simulation test, judging whether the circuit being tested is defective or normal and also confirming the problem symptoms at the same time. Refer to the matrix chart of problem symptoms for each system to narrow down the possible causes of the symptom.

1	**VIBRATION METHOD: When vibration seems to be the major cause.**
CONNECTORS Slightly shake the connector vertically and horizontally. **WIRE HARNESS** Slightly shake the wire harness vertically and horizontally. The connector joint, fulcrum of the vibration, and body through portion are the major areas to be checked thoroughly.	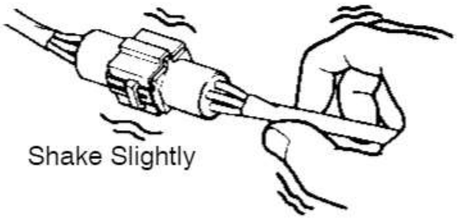 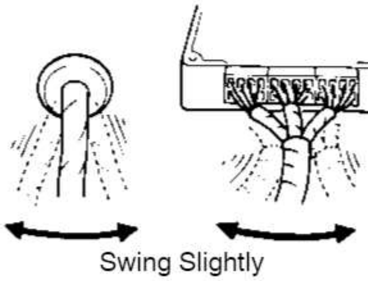 F12331 F12332
PARTS AND SENSOR Apply slight vibration with a finger to the part of the sensor considered to be the problem cause and check if the malfunction occurs. HINT: Applying strong vibration to relays may result in open relays.	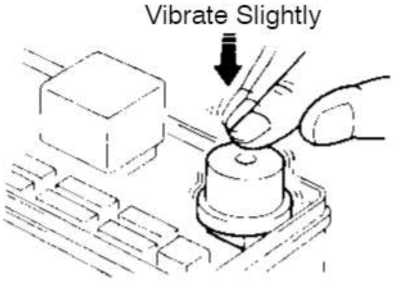 F12334

V07268

2 HEAT METHOD: When the problem seems to occur when the suspect area is heated.

Heat the component that is the likely cause of the malfunction with a hair dryer or similar object. Check to see if the malfunction occurs.

NOTICE:

(1) Do not heat to more than 60°C (140°F). (Temperature limit that no damage is done to the component.)

(2) Do not apply heat directly to parts in the ECU.

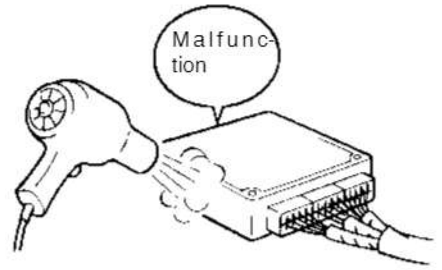

FI2334

3 WATER SPRINKLING METHOD: When the malfunction seems to occur on a rainy day or in a high–humidity condition.

Sprinkle water onto the vehicle and check to see if the malfunction occurs.

NOTICE:

(1) Never sprinkle water directly into the engine compartment, but indirectly change the temperature and humidity by applying water spray onto the radiator front surface.

(2) Never apply water directly onto the electronic components.

(Service hint)

If a vehicle is subject to water leakage, the leaked water may contaminate the ECU. When testing a vehicle with a water leakage problem, special caution must be used.

FI6649

4 OTHER: When a malfunction seems to occur when electrical load is excessive.

Turn on all electrical loads including the heater blower, head lights, rear window defogger, etc. and check to see if the malfunction occurs.

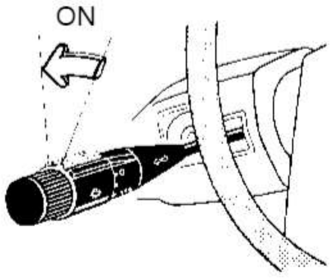

FI2336

4. DIAGNOSTIC TROUBLE CODE CHART

The inspection procedure is shown in the table below. This table permits efficient and accurate troubleshooting using the diagnostic trouble codes displayed in the diagnostic trouble code check. Proceed with troubleshooting in accordance with the inspection procedure given in the diagnostic chart corresponding to the diagnostic trouble codes displayed. The engine diagnostic trouble code chart is shown below as an example.

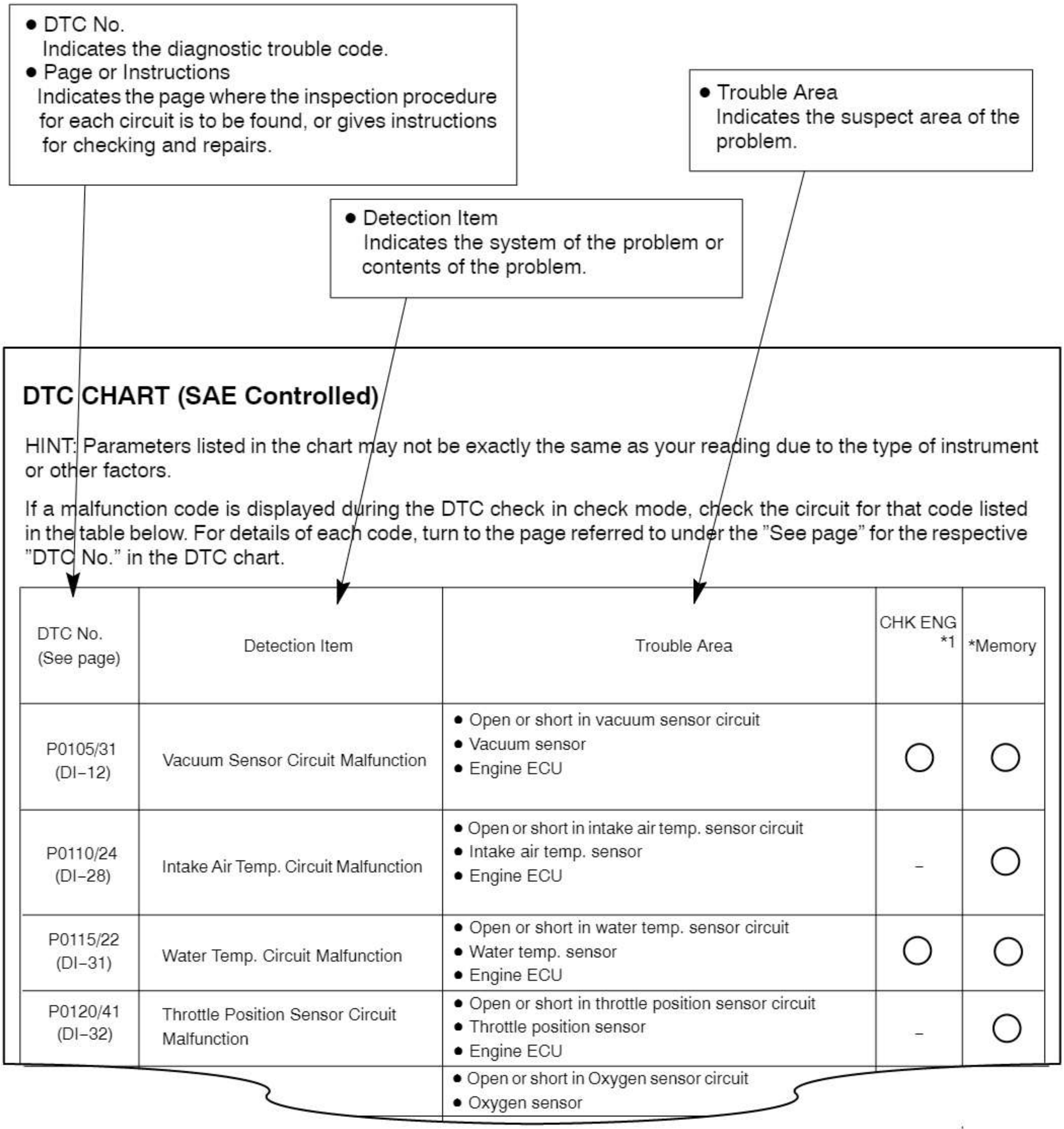

- DTC No.
  Indicates the diagnostic trouble code.
- Page or Instructions
  Indicates the page where the inspection procedure for each circuit is to be found, or gives instructions for checking and repairs.

- Trouble Area
  Indicates the suspect area of the problem.

- Detection Item
  Indicates the system of the problem or contents of the problem.

DTC CHART (SAE Controlled)

HINT: Parameters listed in the chart may not be exactly the same as your reading due to the type of instrument or other factors.

If a malfunction code is displayed during the DTC check in check mode, check the circuit for that code listed in the table below. For details of each code, turn to the page referred to under the "See page" for the respective "DTC No." in the DTC chart.

DTC No. (See page)	Detection Item	Trouble Area	CHK ENG *1	*Memory
P0105/31 (DI–12)	Vacuum Sensor Circuit Malfunction	• Open or short in vacuum sensor circuit • Vacuum sensor • Engine ECU	○	○
P0110/24 (DI–28)	Intake Air Temp. Circuit Malfunction	• Open or short in intake air temp. sensor circuit • Intake air temp. sensor • Engine ECU	–	○
P0115/22 (DI–31)	Water Temp. Circuit Malfunction	• Open or short in water temp. sensor circuit • Water temp. sensor • Engine ECU	○	○
P0120/41 (DI–32)	Throttle Position Sensor Circuit Malfunction	• Open or short in throttle position sensor circuit • Throttle position sensor • Engine ECU	–	○
		• Open or short in Oxygen sensor circuit • Oxygen sensor		

5. PROBLEM SYMPTOMS TABLE

The suspect circuits or parts for each problem symptom are shown in the table below. Use this table to troubleshooting the problem when a "Normal" code is displayed in the diagnostic trouble code check but the problem is still occurring. Numbers in the table indicate the inspection order in which the circuits or parts should be checked.

HINT:

When the problem is not detected by the diagnostic system even though the problem symptom is present, it is considered that the problem is occurring outside the detection range of the diagnostic system, or that the problem is occurring in a system other than the diagnostic system.

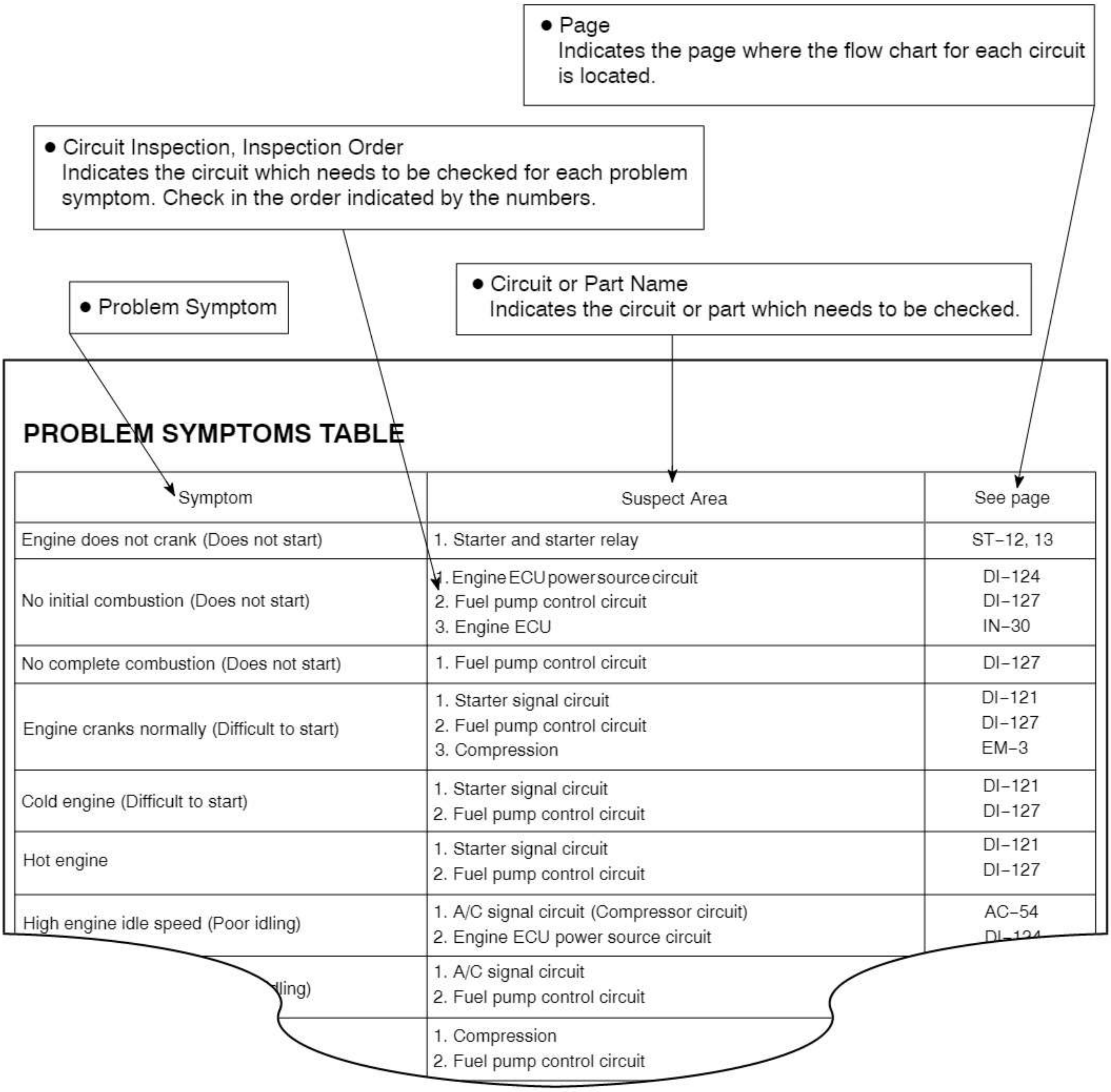

- Page
  Indicates the page where the flow chart for each circuit is located.
- Circuit Inspection, Inspection Order
  Indicates the circuit which needs to be checked for each problem symptom. Check in the order indicated by the numbers.
- Problem Symptom
- Circuit or Part Name
  Indicates the circuit or part which needs to be checked.

PROBLEM SYMPTOMS TABLE

Symptom	Suspect Area	See page
Engine does not crank (Does not start)	1. Starter and starter relay	ST–12, 13
No initial combustion (Does not start)	1. Engine ECU power source circuit 2. Fuel pump control circuit 3. Engine ECU	DI–124 DI–127 IN–30
No complete combustion (Does not start)	1. Fuel pump control circuit	DI–127
Engine cranks normally (Difficult to start)	1. Starter signal circuit 2. Fuel pump control circuit 3. Compression	DI–121 DI–127 EM–3
Cold engine (Difficult to start)	1. Starter signal circuit 2. Fuel pump control circuit	DI–121 DI–127
Hot engine	1. Starter signal circuit 2. Fuel pump control circuit	DI–121 DI–127
High engine idle speed (Poor idling)	1. A/C signal circuit (Compressor circuit) 2. Engine ECU power source circuit	AC–54 DI–124
ling)	1. A/C signal circuit 2. Fuel pump control circuit	
	1. Compression 2. Fuel pump control circuit	

6. CIRCUIT INSPECTION

How to read and use each page is shown below.

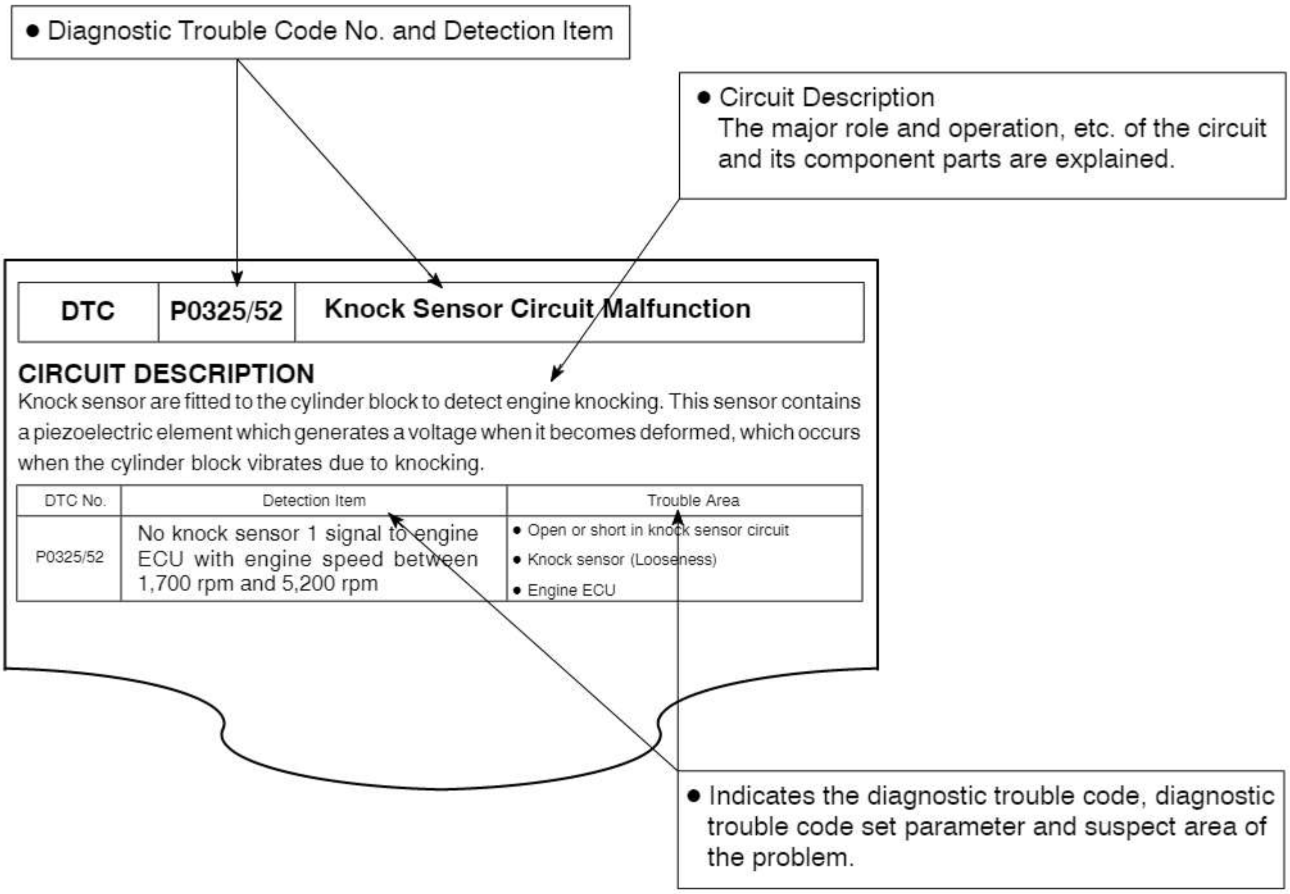

- Diagnostic Trouble Code No. and Detection Item

- Circuit Description
  The major role and operation, etc. of the circuit and its component parts are explained.

DTC	P0325/52	Knock Sensor Circuit Malfunction

CIRCUIT DESCRIPTION

Knock sensor are fitted to the cylinder block to detect engine knocking. This sensor contains a piezoelectric element which generates a voltage when it becomes deformed, which occurs when the cylinder block vibrates due to knocking.

DTC No.	Detection Item	Trouble Area
P0325/52	No knock sensor 1 signal to engine ECU with engine speed between 1,700 rpm and 5,200 rpm	• Open or short in knock sensor circuit • Knock sensor (Looseness) • Engine ECU

- Indicates the diagnostic trouble code, diagnostic trouble code set parameter and suspect area of the problem.

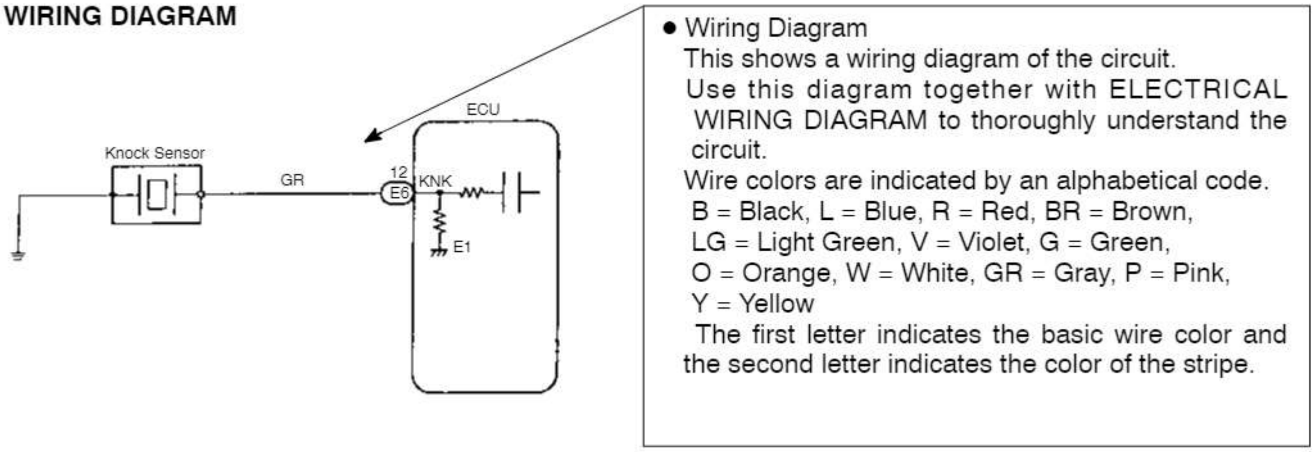

WIRING DIAGRAM

- Wiring Diagram
  This shows a wiring diagram of the circuit.
  Use this diagram together with ELECTRICAL WIRING DIAGRAM to thoroughly understand the circuit.
  Wire colors are indicated by an alphabetical code.
  B = Black, L = Blue, R = Red, BR = Brown,
  LG = Light Green, V = Violet, G = Green,
  O = Orange, W = White, GR = Gray, P = Pink,
  Y = Yellow
  The first letter indicates the basic wire color and the second letter indicates the color of the stripe.

V08423

- Indicates the position of the ignition switch during the check.

LOCK Ignition Switch LOCK (OFF)	ON Ignition Switch ON
START Ignition Switch START	ACC Ignition Switch ACC

- Inspection Procedure
  Use the inspection procedure to determine if the circuit is normal or abnormal, and , if it is abnormal, use it to determine whether the problem is located in the sensors, actuators, wire harness or ECU.

INSPECTION PROCEDURE

1 Check continuity between terminal KNK of ECU connector and body ground.

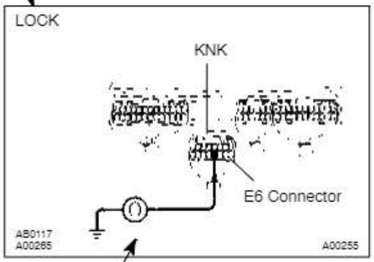

PREPARATION:

(a) Remove the glove compartment (See page FI–37).
(b) Disconnect the E6 connector of ECU.

CHECK:

Measure resistance between terminal KNK of ECU connector and body ground.

OK:

Resistance: 1 MΩ or higher

OK → **Go to step 3.**

NG

2 Check knock sensor (See page FI–34).

OK → **Replace knock sensor.**

- Indicates the place to check the voltage or resistance.
- Indicates the connector position to checked, from the front or back side.

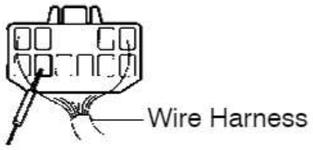

Check from the connector back side.
(with harness)

Check from the connector front side. (without harness)
In this case, care must be taken not to bend the terminals.

- Indicates the condition of the connector of ECU during the check.

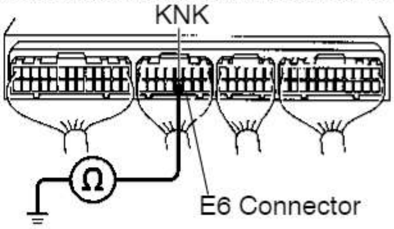

Connector being checked is connected.

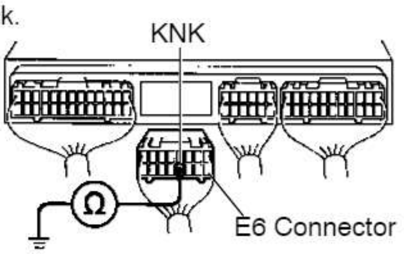

Connector being checked is disconnected.

V08425

HOW TO USE THE DIAGNOSTIC CHART AND INSPECTION PROCEDURE

1. CONNECTOR CONNECTION AND TERMINAL INSPECTION

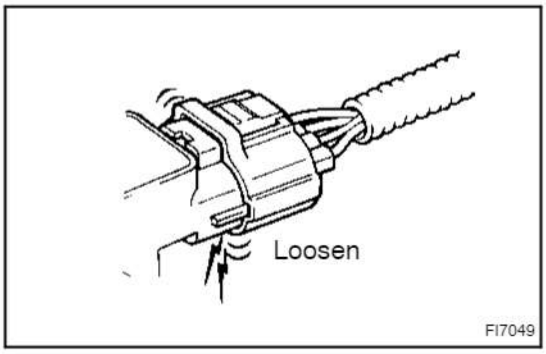

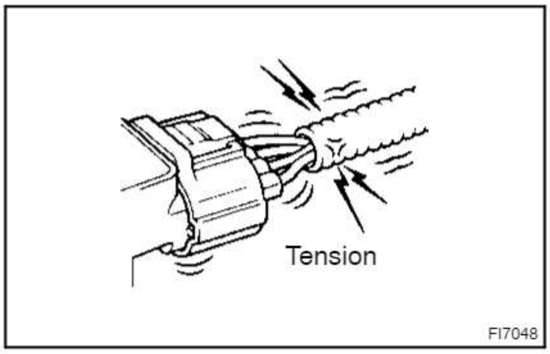

- For troubleshooting, diagnostic trouble code charts or problem symptom charts are provided for each circuit with detailed inspection procedures on the following pages.
- When all the component parts, wire harnesses and connectors of each circuit except the ECU are found to be normal in troubleshooting, then it is determined that the problem is in the ECU. Accordingly, if diagnosis is performed without the problem symptoms occurring, the instruction will be to check and replace the ECU, even if the problem is not in the ECU. So always confirm that the problem symptoms are occurring, or proceed with inspection while using the symptom simulation method.
- The instructions ”Check wire harness and connector” and ”Check and replace ECU” which appear in the inspection procedure, are common and applicable to all diagnostic trouble codes. Follow the procedure outlined below whenever these instructions appear.

OPEN CIRCUIT:

This could be due to a disconnected wire harness, faulty contact in the connector, a connector terminal pulled out, etc.

HINT:

- It is rarely the case that a wire is broken in the middle of it. Most cases occur at the connector. In particular, carefully check the connectors of sensors and actuators.
- Faulty contact could be due to rusting of the connector terminals, to foreign materials entering terminals or a drop in the contact pressure between the male and female terminals of the connector. Simply disconnecting and reconnecting the connectors once changes the condition of the connection and may result in a return to normal operation. Therefore, in troubleshooting, if no abnormality is found in the wire harness and connector check, but the problem disappears after the check, then the cause is considered to be in the wire harness or connectors.

SHORT CIRCUIT:

This could be due to a short circuit between the wire harness and the body ground or to a short inside the switch etc.

HINT:

When there is a short between the wire harness and body ground, check thoroughly whether the wire harness is caught in the body or is clamped properly.

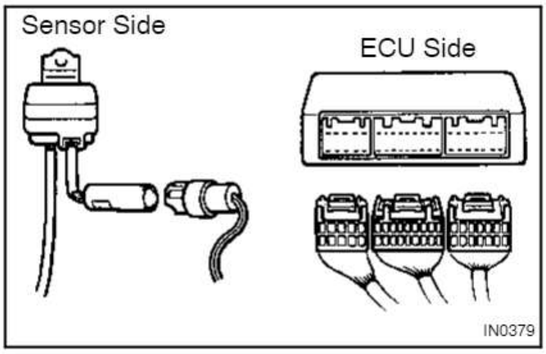

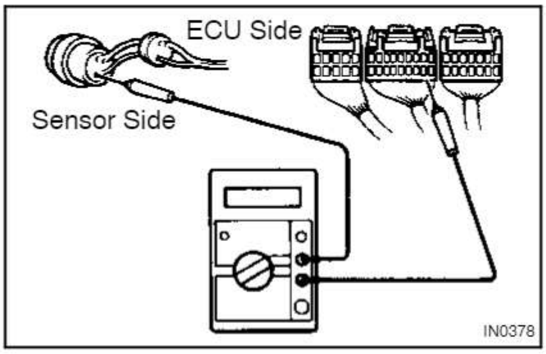

2. CONTINUITY CHECK (OPEN CIRCUIT CHECK)

(a) Disconnect the connectors at both ECU and sensor sides.

(b) Measure the resistance between the applicable terminals of the connectors.

Resistance: 1 Ω or less

HINT:

- Measure the resistance while lightly shaking the wire harness vertically and horizontally.
- When tester probes are inserted into a connector, insert the probes from the back. For waterproof connectors in which the probes cannot be inserted from the back, be careful not to bend the terminals when inserting the tester probes.

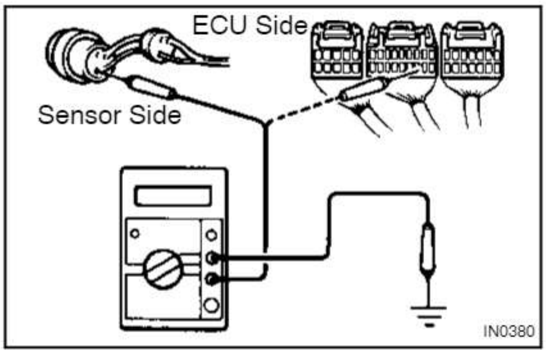

3. RESISTANCE CHECK (SHORT CIRCUIT CHECK)

(a) Disconnect the connectors at both ends.

(b) Measure the resistance between the applicable terminals of the connectors and body ground. Be sure to carry out this check on the connectors on both ends.

Resistance: 1 MΩ or higher

HINT:

Measure the resistance while lightly shaking the wire harness vertically and horizontally.

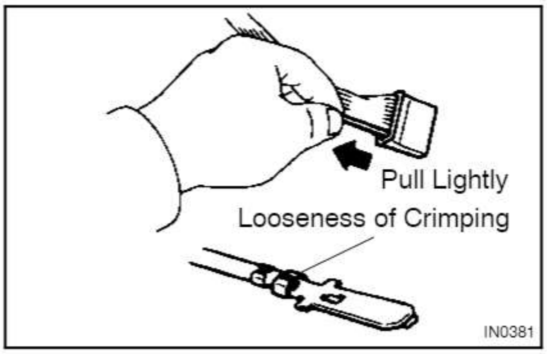

4. VISUAL CHECK AND CONTACT PRESSURE CHECK

(a) Disconnect the connectors at both ends.

(b) Check for rust or foreign material, etc. in the terminals of the connectors.

(c) Check crimped portions for looseness or damage and check if the terminals are secured in lock portion.

HINT:

The terminals should not come out when pulled lightly.

(d) Prepare a test male terminal and insert it in the female terminal, then pull it out.

NOTICE:

When testing a gold–plated female terminal, always use a gold–plated male terminal.

HINT:

When the test terminal is pulled out more easily than others, there may be poor contact in that section.

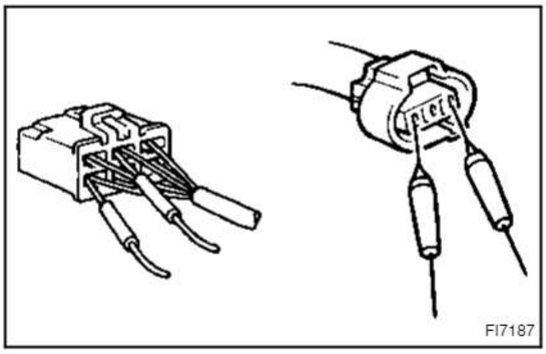

5. CONNECTOR HANDLING

When inserting tester probes into a connector, insert them from the rear of the connector. When necessary, use mini test leads. For water resistant connectors which cannot be accessed from behind, take good care not to deform the connector terminals.

Fig. 1

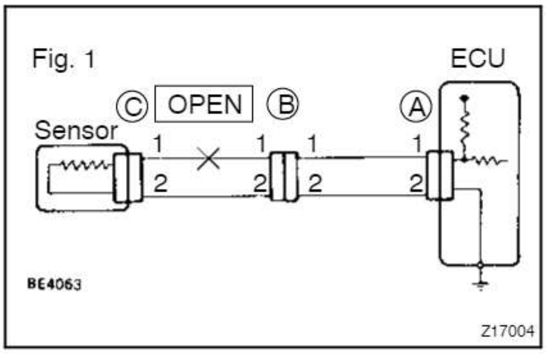

6. CHECK OPEN CIRCUIT

For the open circuit in the wire harness in Fig. 1, perform "(a) Continuity Check" or "(b) Voltage Check" to locate the section.

Fig. 2

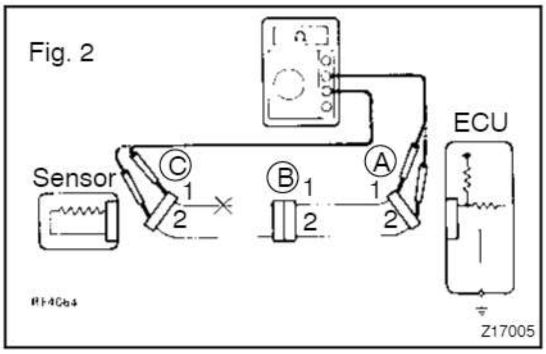

Fig. 3

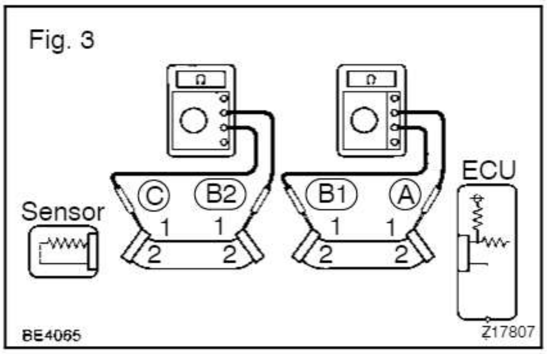

(a) Check the continuity.

(1) Disconnect connectors "A" and "C" and measure the resistance between them.
In the case of Fig. 2,
Between terminal 1 of connector "A" and terminal 1 of connector "C" → No continuity (open)
Between terminal 2 of connector "A" and terminal 2 of connector "C" → Continuity
Therefore, it is found out that there is an open circuit between terminal 1 of connector "A" and terminal 1 of connector "C".

(2) Disconnect connector "B" and measure the resistance between them.
In the case of Fig. 3,
Between terminal 1 of connector "A" and terminal 1 of connector "B1" → Continuity
Between terminal 1 of connector "B2" and terminal 1 of connector "C" → No continuity (open)
Therefore, it is found out that there is an open circuit between terminal 1 of connector "B2" and terminal 1 of connector "C".

Fig. 4

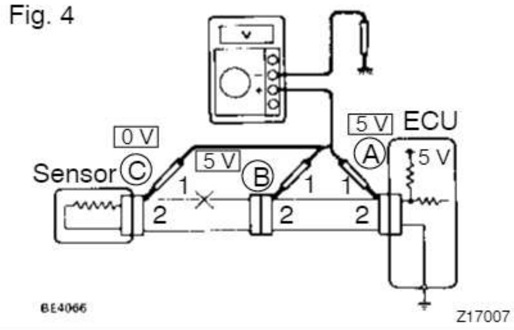

(b) Check the voltage.

In a circuit in which voltage is applied (to the ECU connector terminal), an open circuit can be checked for by conducting a voltage check.

As shown in Fig. 4, with each connector still connected, measure the voltage between body ground and terminal 1 of connector "A" at the ECU 5 V output terminal, terminal 1 of connector "B", and terminal 1 of connector "C", in that order.

If the results are:

5 V: Between Terminal 1 of connector "A" and Body Ground

5 V: Between Terminal 1 of connector "B" and Body Ground

0 V: Between Terminal 1 of connector "C" and Body Ground

Then it is found out that there is an open circuit in the wire harness between terminal 1 of "B" and terminal 1 of "C".

Fig. 5

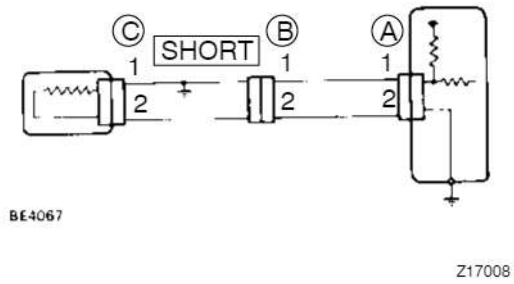

7. CHECK SHORT CIRCUIT

If the wire harness is ground shorted as in Fig. 5, locate the section by conducting a "continuity check with ground".

Fig. 6

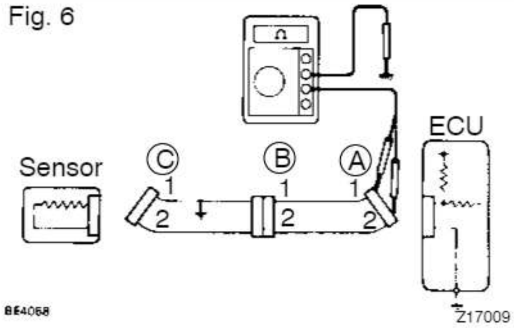

Check the continuity with ground.

(1) Disconnect connectors "A" and "C" and measure the resistance between terminal 1 and 2 of connector "A" and body ground.

In the case of Fig. 6

Between terminal 1 of connector "A" and body ground → Continuity (short)

Between terminal 2 of connector "A" and body ground → No continuity

Therefore, it is found out that there is a short circuit between terminal 1 of connector "A" and terminal 1 of connector "C".

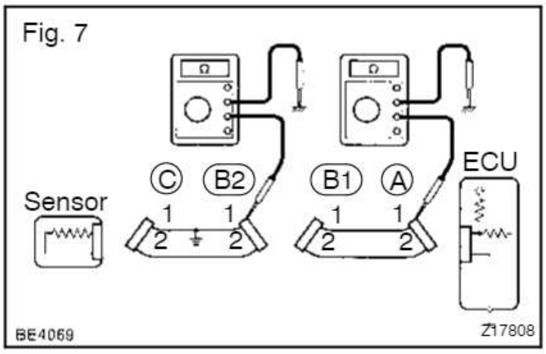

(2) Disconnect connector "B" and measure the resistance between terminal 1 of connector "A" and body ground, and terminal 1 of connector "B2" and body ground.
In the case of Fig. 7
Between terminal 1 of connector "A" and body ground → No continuity
Between terminal 1 of connector "B2" and body ground → Continuity (short)
therefore, it is found out that there is a short circuit between terminal 1 of connector "B2" and terminal 1 of connector "C".

8. CHECK AND REPLACE ECU

First check the ECU ground circuit. If it is faulty, repair it. If it is normal, the ECU could be faulty, so replace the ECU with a known good one and check if the symptoms appear.

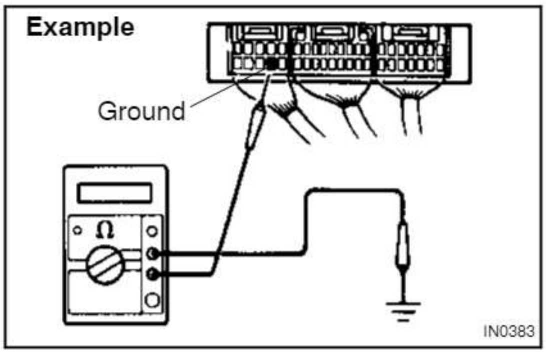

(1) Measure the resistance between the ECU ground terminal and the body ground.

Resistance: 1 Ω or less

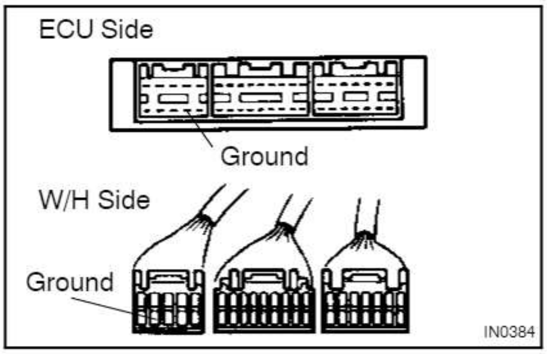

(2) Disconnect the ECU connector, check the ground terminals on the ECU side and the wire harness side for bend and check the contact pressure.

TERMS

ABBREVIATIONS USED IN THIS MANUAL

IN00S–06

Abbreviations	Meaning
A/C	Air Conditioner
A/T	Automatic Transmission
BTDC	Before Top Dead Center
DLC3	Data Link Connector 3
DTC	Diagnostic Trouble Code
ECU	Electronic Control Unit
EFI	Electronic Fuel Injection
EVAP	Evaporative Emission Control
FIPG	Formed In Place Gasket
FL	Fusible Link
IG	Ignition
J/B	Junction Block
LH	Left–Hand
LHD	Left–Hand Drive
M/T	Manual Transmission
O/S	Oversize
PCV	Positive Crankcase Ventilation
RH	Right–Hand
RHD	Right–Hand Drive
SSM	Special Service Materials
SST	Special Service Tools
STD	Standard
SW	Switch
TDC	Top Dead Center
TWC	Three–Way Catalyst
U/S	Undersize
VSV	Vacuum Switching Valve
w/	With
w/o	Without

IGNITION SYSTEM

ON–VEHICLE INSPECTION

IG0BX–01

NOTICE:

"Cold" and "Hot" in these sentences express the temperature of the coils themselves. "Cold" is from –10°C (14°F) to 50°C (122°F) and "Hot" is from 50°C (122°F) to 100°C (212°F).

1. INSPECT IGNITION COIL (WITH IGNITER) AND SPARK TEST

Check that the spark occurs.

(1) Remove the ignition coils (with igniter). (See page IG–7)
(2) Remove the spark plugs.
(3) Install the spark plugs to each ignition coil (with igniter), and connect the ignition coil (with igniter) connector.
(4) Disconnect the 8 injector connectors.
(5) Ground the spark plug.
(6) Check if spark occurs while engine is being cranked.

NOTICE:

To prevent gasoline from being injected from injectors during this test, crank the engine for no more than 5 – 10 seconds at time.

If the spark does not occur, do the test as follows:

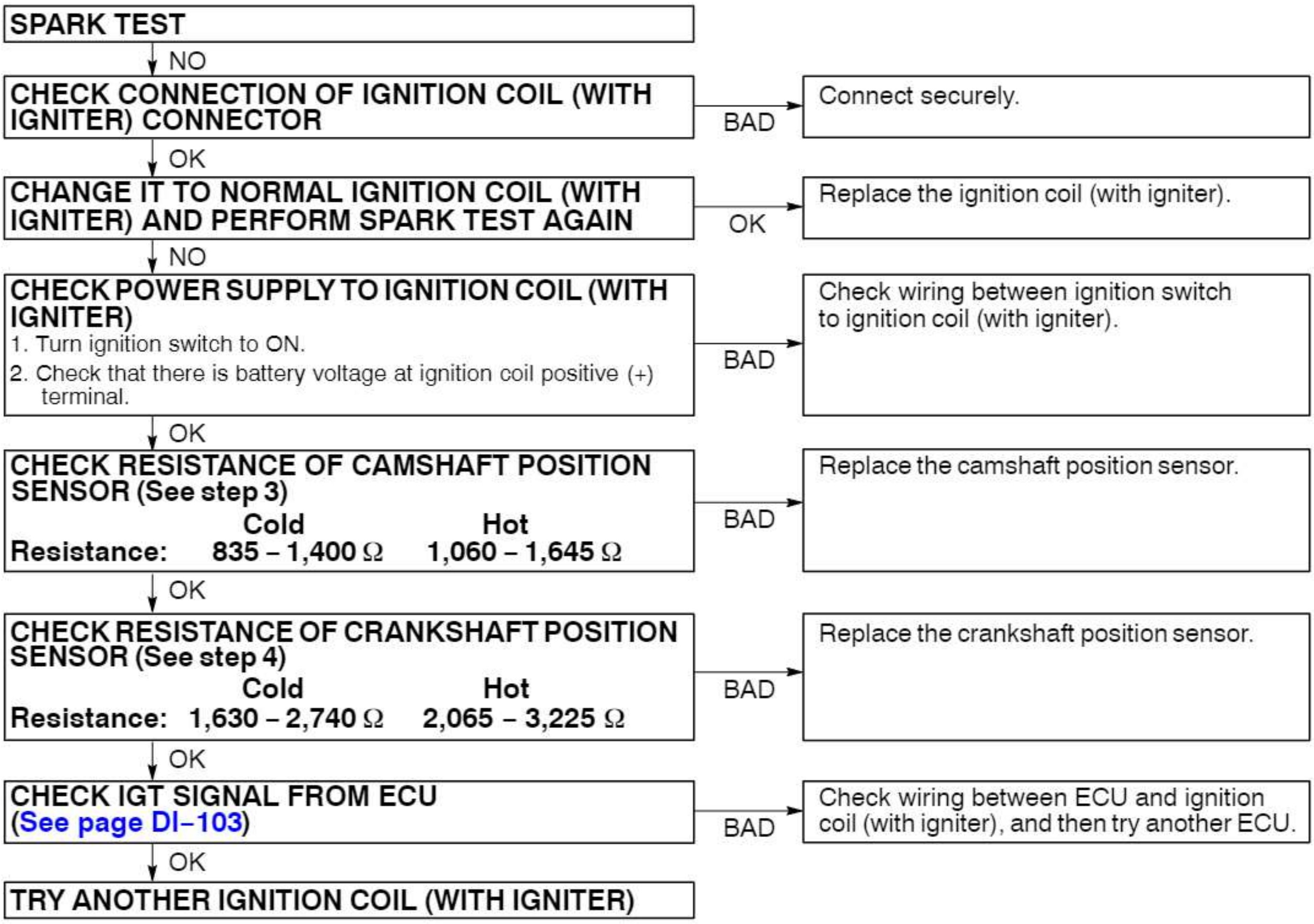

(7) Using a 16 mm plug wrench, install the spark plugs.

Torque: 17.5 N·m (180 kgf·cm, 13 ft·lbf)

(8) Reinstall the ignition coils (with igniter).
(See page IG–7)

2. Europe and Australia:
INSPECT SPARK PLUGS

NOTICE:

- **Never use a wire brush for cleaning.**
- **Never attempt to adjust the electrode gap on used spark plug.**
- **Spark plug should be replaced every 100,000 km (60,000 miles).**

(a) Remove the ignition coils (with igniter).
(See page IG–7)

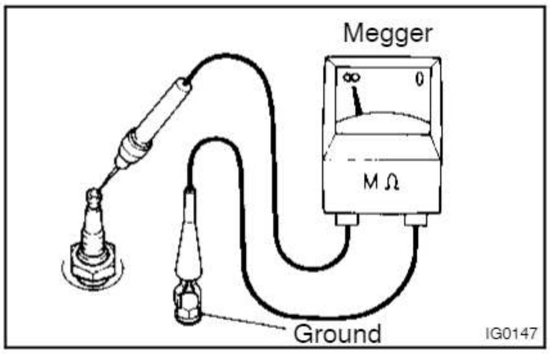

(b) Check the electrode.

- Using a megger (insulation resistance meter), measure the insulation resistance.

Correct insulation resistance: 10 MΩ or more

If the resistance is less than specified, proceed to step (c).

HINT:

If a megger is not available, the following simple method of inspection provides fairly accurate results.

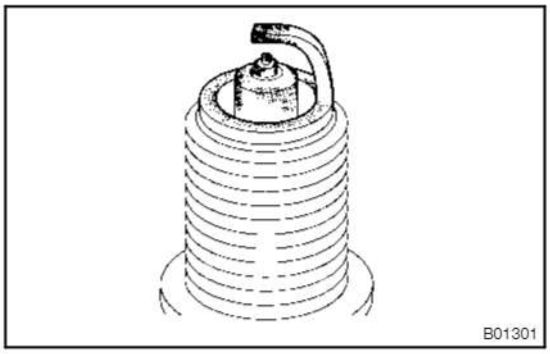

- Simple Method:
  - Quickly race the engine to 4,000 rpm 5 times.
  - Remove the spark plug. (See step (c))
  - Visually check the spark plug.
    If the electrode is dry ... OK.
    If the electrode is wet ... Proceed to step (d).
  - Reinstall the spark plug. (See step (g))

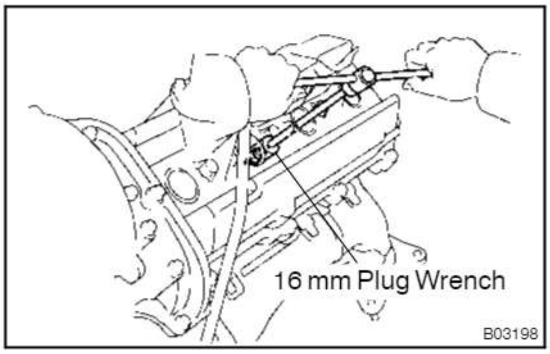

(c) Using a 16 mm plug wrench, remove the spark plugs.

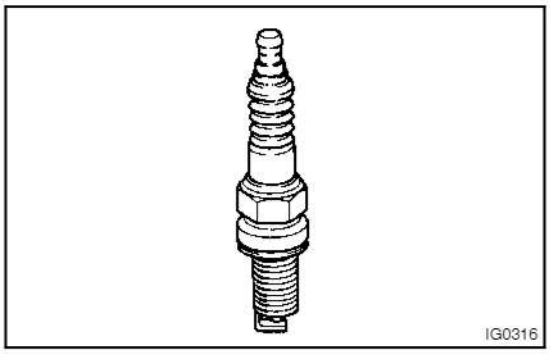

(d) Check the spark plug for thread damage and insulator damage.

If abnormal, replace the spark plug.

Recommended spark plug:

DENSO made	SK20R11
NGK made	IFR6A11

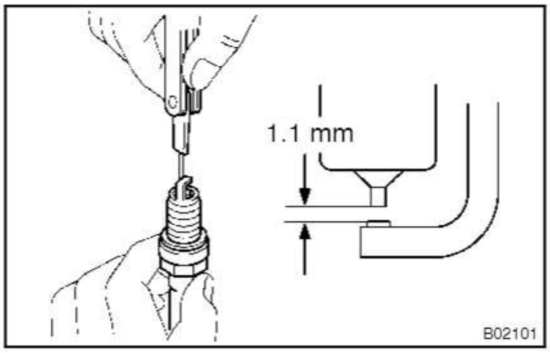

(e) Check the spark plug electrode gap.

Maximum electrode gap for used spark plug:
1.2 mm (0.047 in.)

If the gap is greater than maximum, replace the spark plug.

Correct electrode gap for new spark plug:
1.1 mm (0.043 in.)

NOTICE:

If adjusting the gap of a new spark plug, bend only the base of the ground electrode. Do not touch the tip. Never attempt to adjust the gap on a used plug.

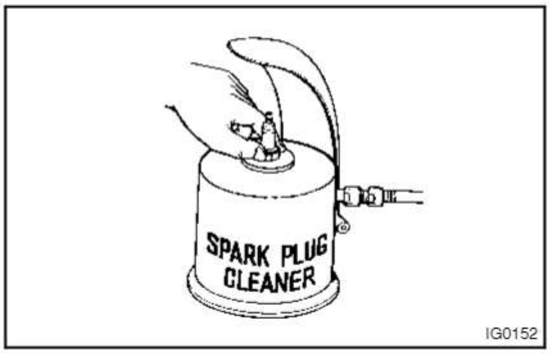

(f) Clean the spark plugs.

If the electrode has traces of wet carbon, allow it to dry and then clean with a spark plug cleaner.

Air pressure: Below 588 kPa (6 kgf/cm^2, 85 psi)

Duration: 20 seconds or less

HINT:

If there are traces of oil, remove it with gasoline before using the spark plug cleaner.

(g) Using a 16 mm plug wrench, install the spark plugs.

Torque: 17.5 N·m (180 kgf·cm, 13 ft·lbf)

(h) Reinstall the ignition coils (with igniter).
(See page IG–7)

3. Others:
INSPECT SPARK PLUGS

(a) Remove the ignition coils (with igniter).
(See page IG–7)

(b) Using a 16 mm plug wrench, remove the spark plugs.

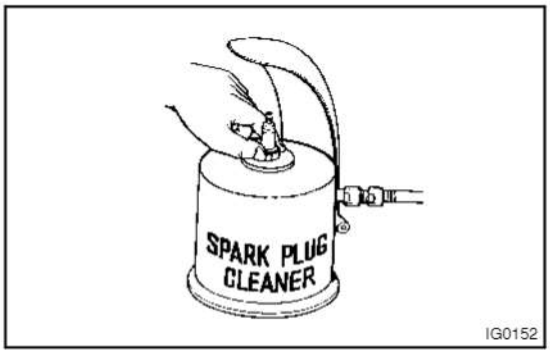

(c) Clean the spark plugs.

If the electrode has traces of wet carbon, allow it to dry and then clean with a spark plug cleaner.

Air pressure: Below 588 kPa (6 kgf/cm^2, 85 psi)

Duration: 20 seconds or less

HINT:

If there are traces of oil, remove it with gasoline before using the spark plug cleaner.

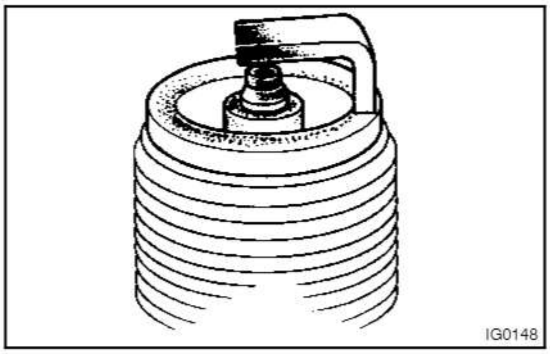

(d) Check the spark plug for thread damage and insulator damage.

If abnormal, replace the spark plug.

Recommended spark plug:

DENSO made	K20R–U
NGK made	BKR6EYA

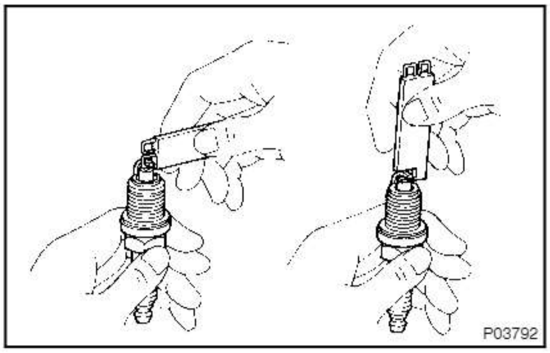

(e) Adjust electrode gap.
Carefully bend the outer electrode to obtain the correct electrode gap.

Electrode gap: 0.8 mm (0.031 in.)

(f) Using a 16 mm plug wrench, install the spark plugs.

Torque: 17.5 N·m (180 kgf·cm, 13 ft·lbf)

(g) Reinstall the ignition coil with igniters.
(See page IG–7)

4. INSPECT CAMSHAFT POSITION SENSOR

(a) Remove the V–bank cover.

(b) Disconnect the camshaft position sensor connector.

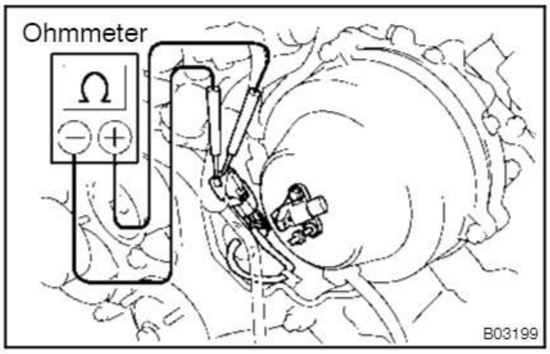

(c) Using an ohmmeter, measure the resistance between terminals.

Resistance:

Cold	835 – 1,400 Ω
Hot	1,060 – 1,645 Ω

If the resistance is not as specified, replace the camshaft position sensor.

(d) Reconnect the camshaft position sensor connector.

(e) Reinstall the V–bank cover.

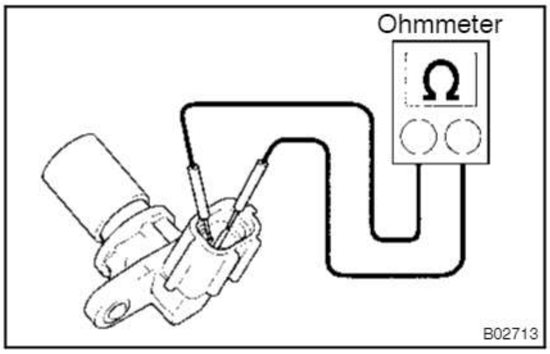

5. INSPECT CRANKSHAFT POSITION SENSOR

(a) Remove the crankshaft position sensor.
(See page IG–13)

(b) Using an ohmmeter, measure the resistance between the terminals.

Resistance:

Cold	1,630 – 2,740 Ω
Hot	2,065 – 3,225 Ω

If the resistance is not as specified, replace the crankshaft position sensor.

(c) Reinstall the crankshaft position sensor.

IGNITION COIL

COMPONENTS

IG0BO–01

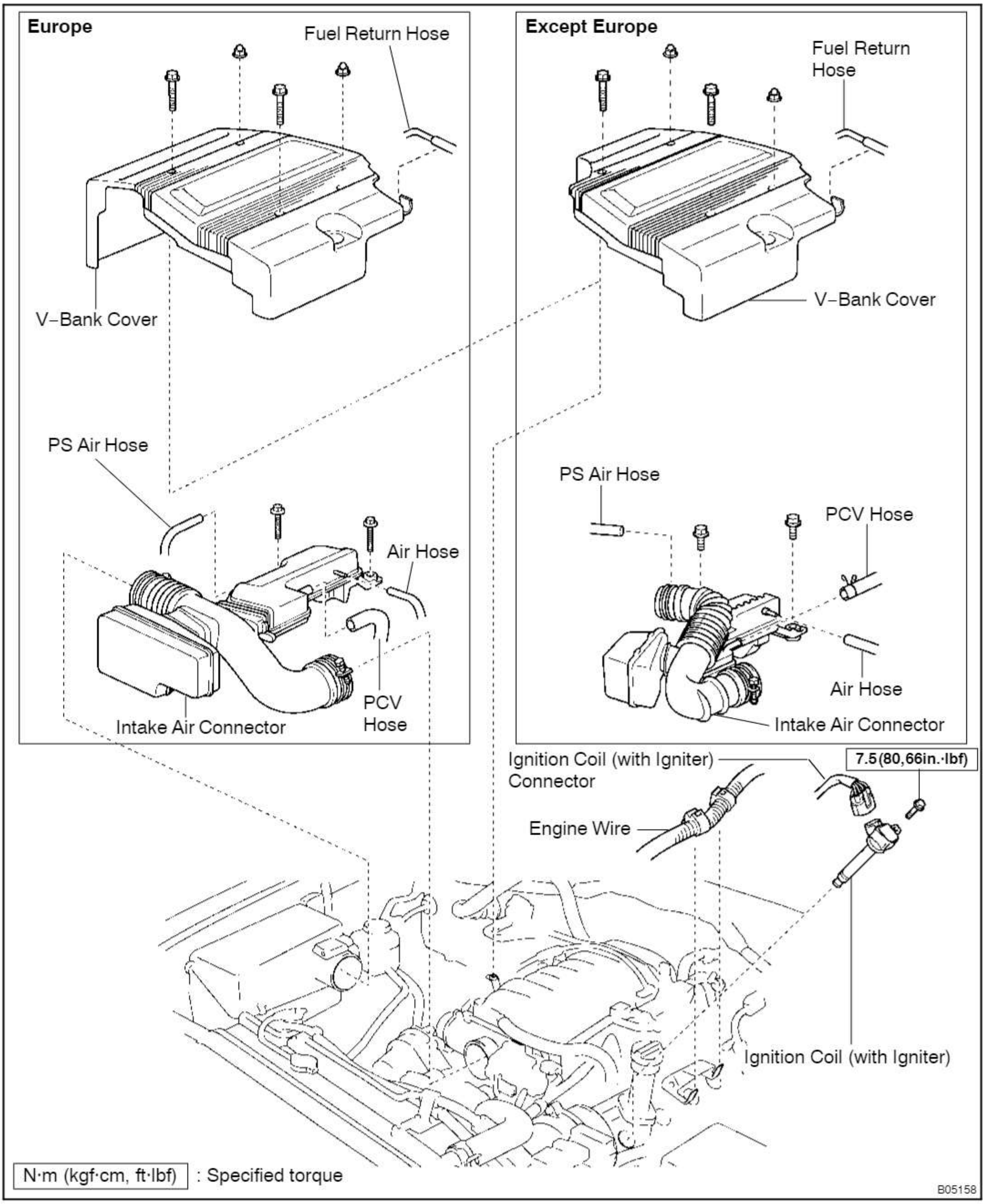

IG0BP–01

REMOVAL

1. **REMOVE V–BANK COVER**
2. **DISCONNECT ENGINE WIRE FROM LH CYLINDER HEAD COVER**

Disconnect the 2 wire clamps and engine wire.

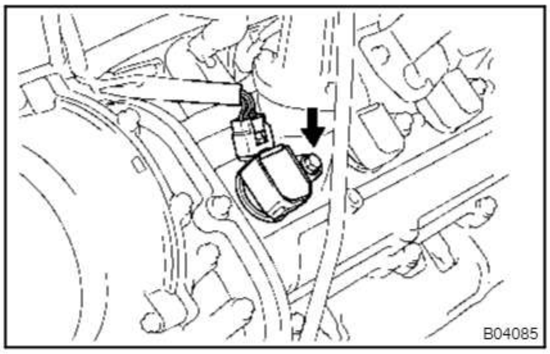

3. **DISCONNECT IGNITION COIL (WITH IGNITER) CONNECTORS**
4. **REMOVE IGNITION COILS (WITH IGNITER) FROM SPARK PLUGS**

Remove the bolt, and pull out the ignition coil (with igniter). Remove the 8 ignition coils (with igniter).

Torque: 7.5 N·m (80 kgf·cm, 66 in.·lbf)

IG0BQ–01

INSTALLATION

Installation is in the reverse order of removal. (See page IG–7)

CAMSHAFT POSITION SENSOR

COMPONENTS

IG0BR–01

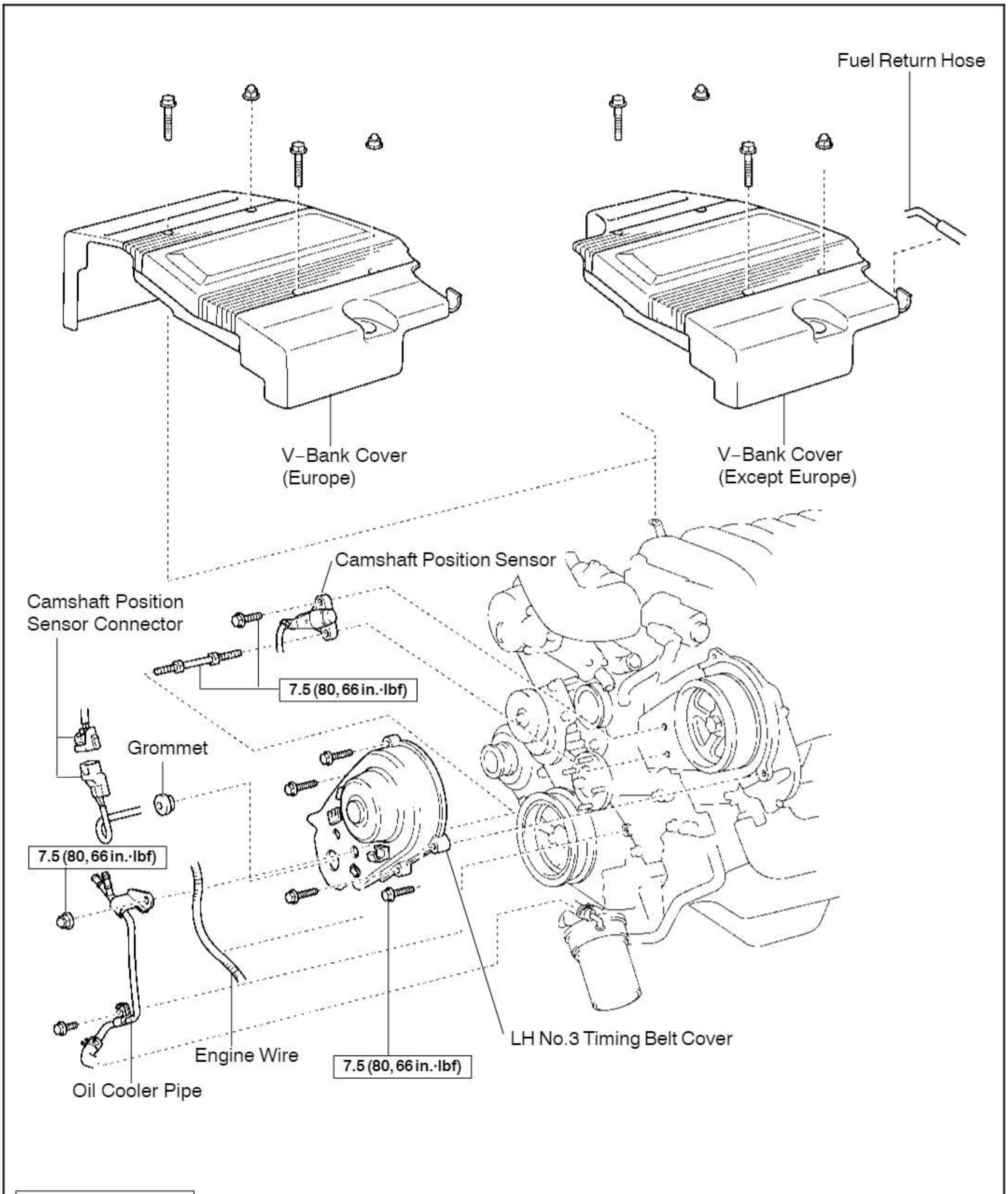

N·m (kgf·cm, ft·lbf) : Specified torque

B05160

IG0BS–01

REMOVAL

1. **REMOVE V–BANK COVER**
2. **DRAIN ENGINE COOLANT**
3. **DISCONNECT UPPER RADIATOR HOSE**
4. **REMOVE LH NO.3 TIMING BELT COVER**
   (See page EM–16)

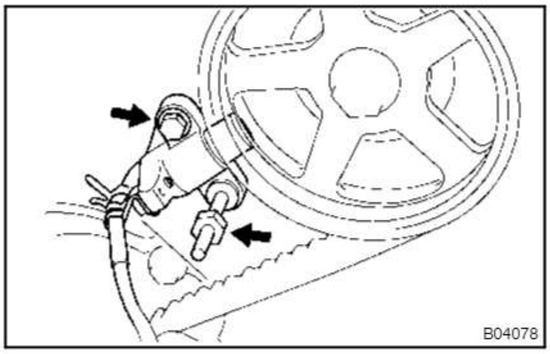

5. **REMOVE CAMSHAFT POSITION SENSOR**

Remove the bolt, stud bolt and camshaft position sensor.

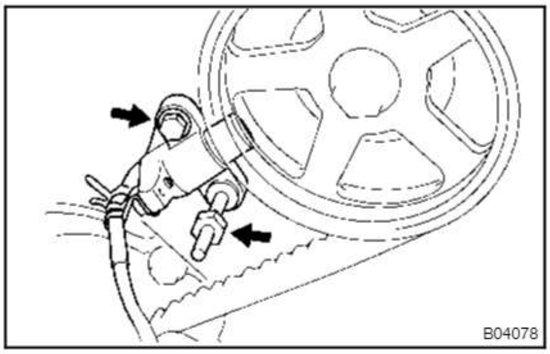

INSTALLATION

1. **INSTALL CAMSHAFT POSITION SENSOR**

Install the camshaft position sensor with the bolt and stud bolt

Torque: 7.5 N·m (80 kgf·cm, 66 in.·lbf)

2. **INSTALL LH NO.3 TIMING BELT COVER (See page EM–23)**
3. **CONNECT RADIATOR HOSE**
4. **INSTALL V–BANK COVER**
5. **FILL ENGINE COOLANT (See page CO–2)**
6. **CHECK ENGINE COOLANT FOR LEAKS**
7. **CHECK IGNITION TIMING (See page EM–11)**

IG0BU–01

COMPONENTS

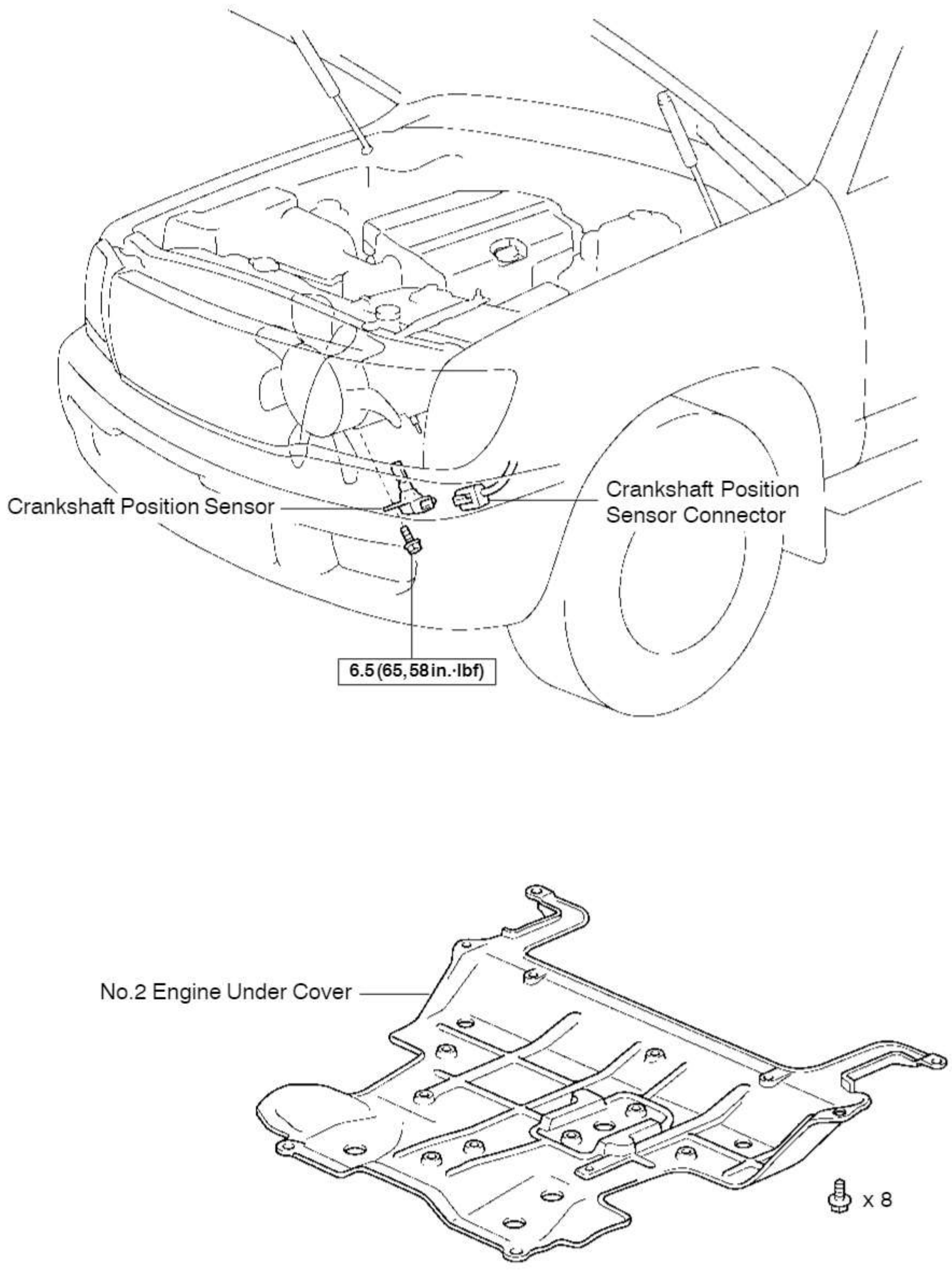

N·m (kgf·cm, ft·lbf) : Specified torque

IG0BV–01

REMOVAL

1. REMOVE NO.2 ENGINE UNDER COVER

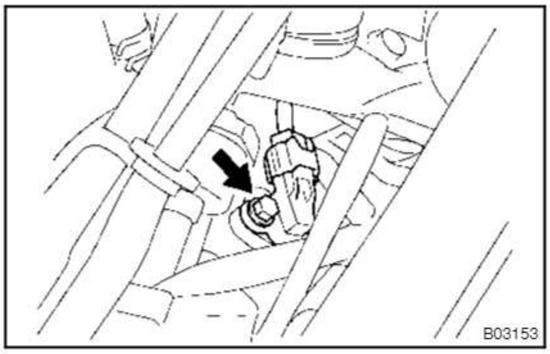

2. REMOVE CRANKSHAFT POSITION SENSOR

(a) Disconnect the crankshaft position sensor connector.

(b) Remove the bolt and crankshaft position sensor.

Torque: 6.5 N·m (65 kgf·cm, 58 in.·lbf)

IG0BW–01

INSTALLATION

Installation is in the reverse order of removal. (See page IG–13)

STARTING SYSTEM

ST0A4–02

ON–VEHICLE INSPECTION

NOTICE:

Before changing the starter, check these items again:

- **Connector connection**
- **Accessory installation, e.g.: theft deterrent system**

STARTER

COMPONENTS

ST0EG–01

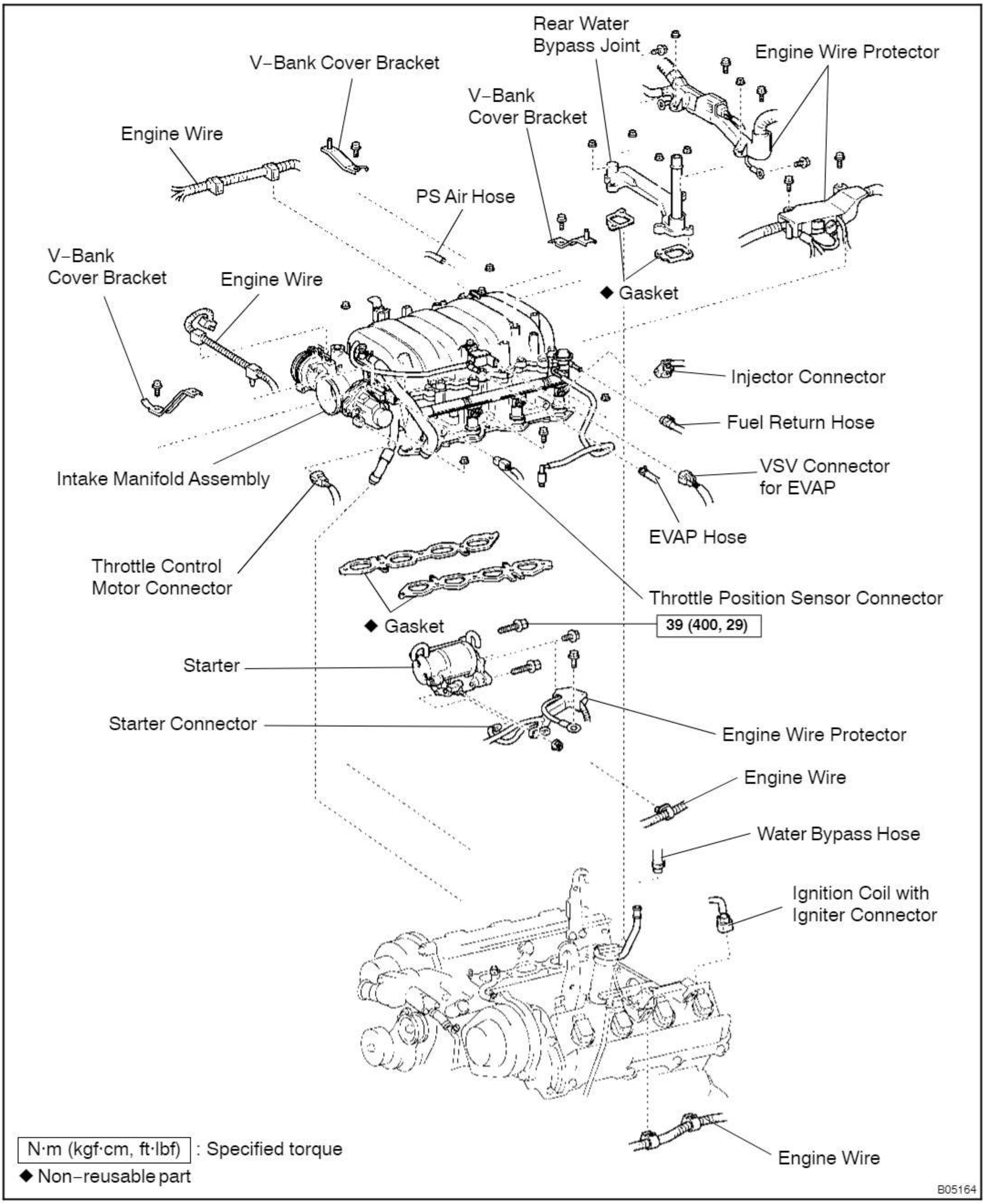

1.4 kW

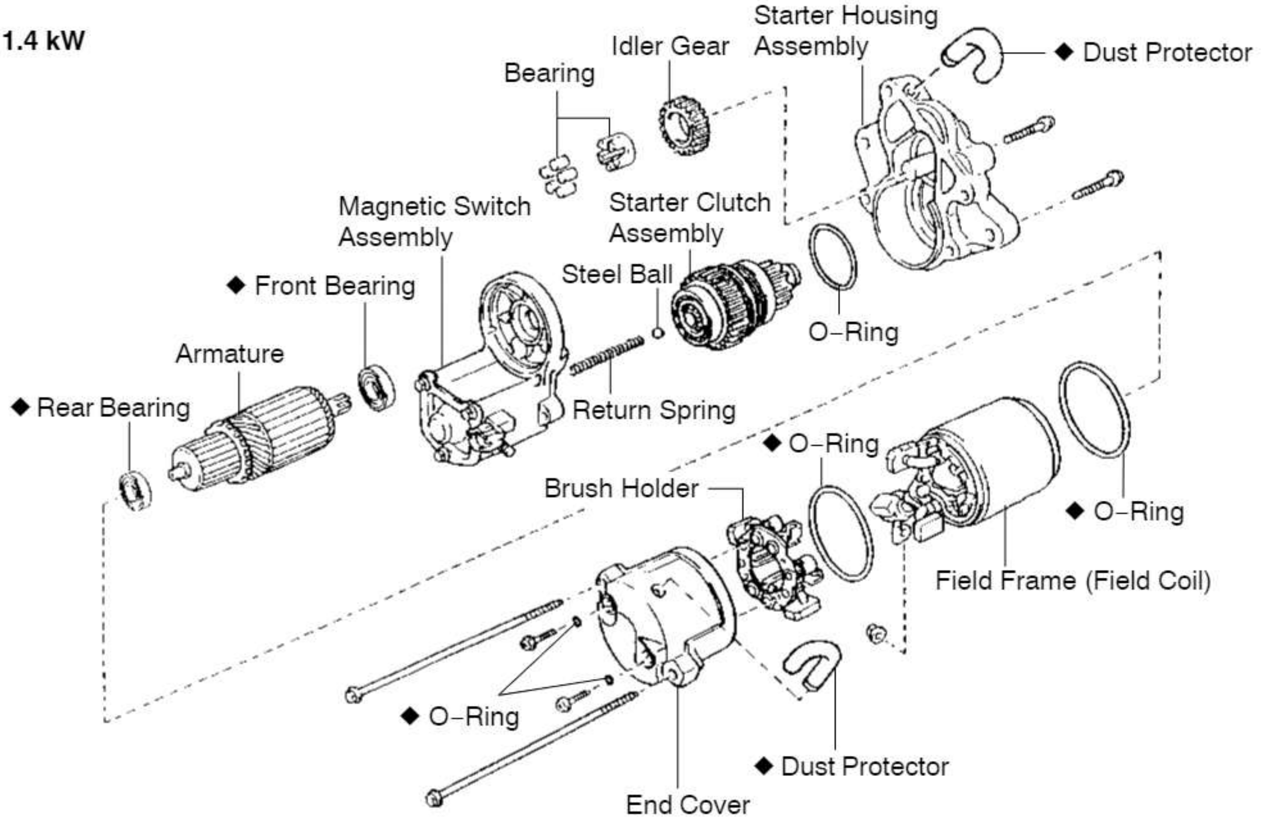

Magnetic Switch Assembly

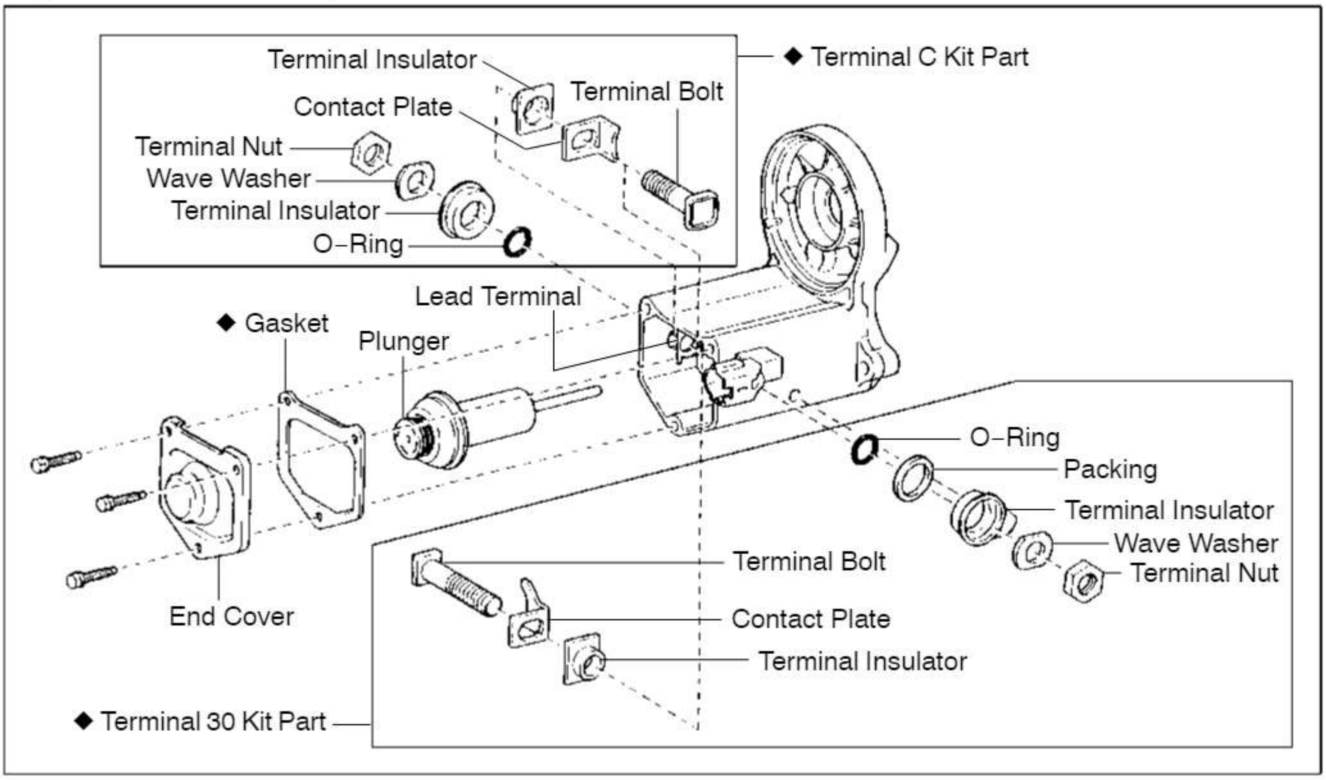

◆ Non–reusable part

B04888

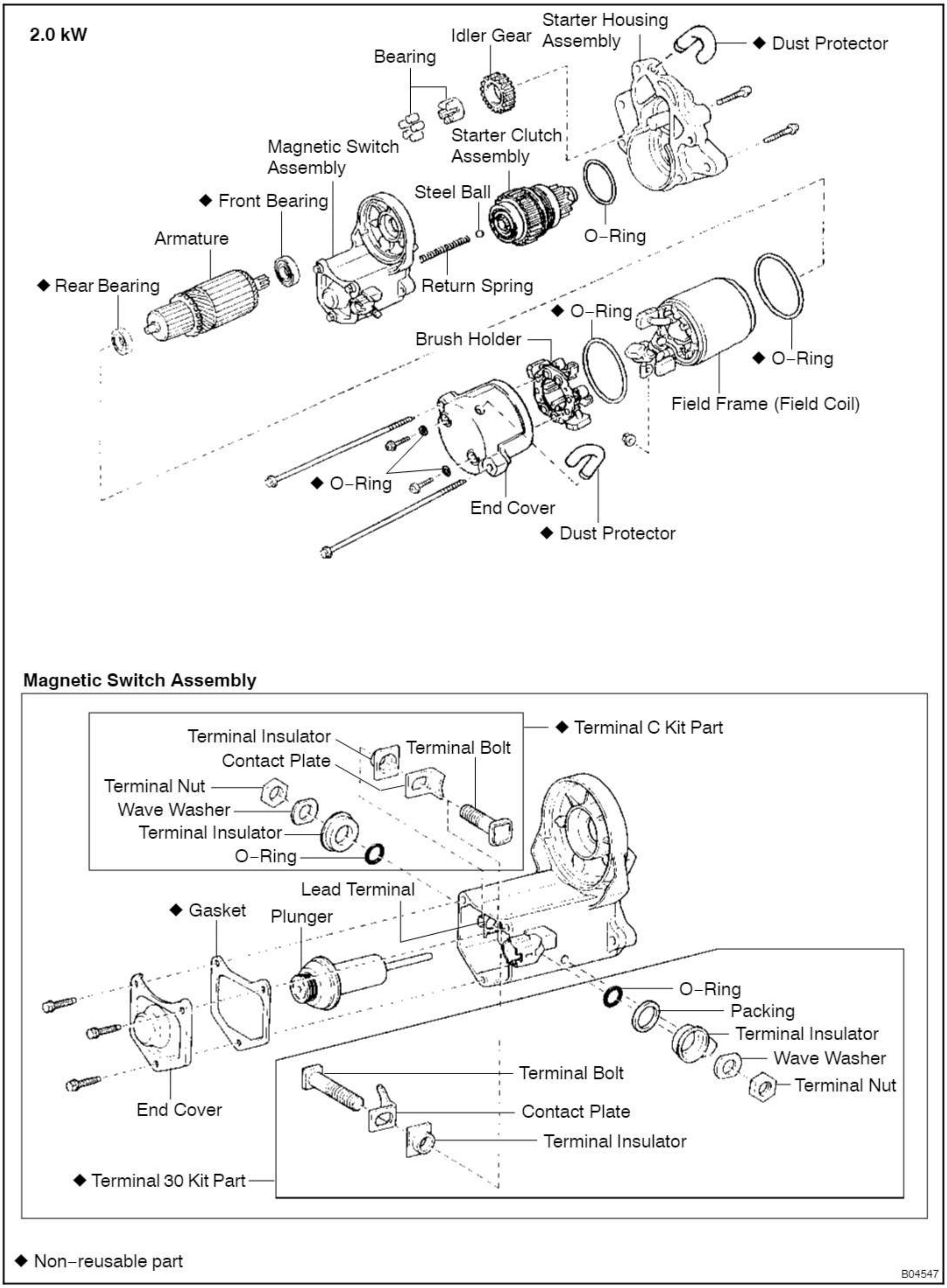
2.0 kW
Starter Housing Assembly
Idler Gear
◆ Dust Protector
Bearing
Magnetic Switch Assembly
Starter Clutch Assembly
Steel Ball
◆ Front Bearing
Armature
O–Ring
◆ Rear Bearing
Return Spring
◆ O–Ring
Brush Holder
◆ O–Ring
Field Frame (Field Coil)
◆ O–Ring
End Cover
◆ Dust Protector
Magnetic Switch Assembly
Terminal Insulator
Terminal Bolt
◆ Terminal C Kit Part
Contact Plate
Terminal Nut
Wave Washer
Terminal Insulator
O–Ring
Lead Terminal
◆ Gasket
Plunger
O–Ring
Packing
Terminal Insulator
Wave Washer
Terminal Bolt
Terminal Nut
Contact Plate
End Cover
Terminal Insulator
◆ Terminal 30 Kit Part
◆ Non–reusable part
B04547

ST0A7–02

DISASSEMBLY

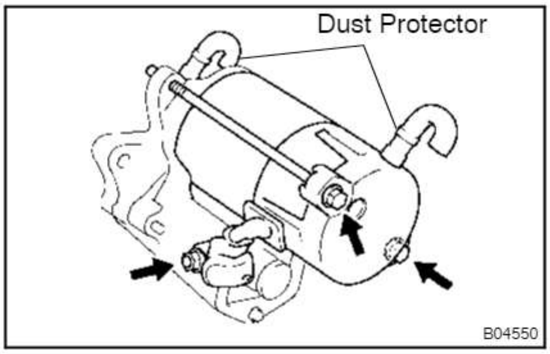

1. REMOVE 2 DUST PROTECTORS

2. REMOVE FIELD FRAME AND ARMATURE

(a) Remove the nut, and disconnect the lead wire from the magnetic switch terminal.

Torque: 5.9 N·m (60 kgf·cm, 52 in.·lbf)

(b) Remove the 2 through bolts.

Torque:
1.4 kW: 5.9 N·m (60 kgf·cm, 52 in.·lbf)
2.0 kW: 9.3 N·m (95 kgf·cm, 82 in.·lbf)

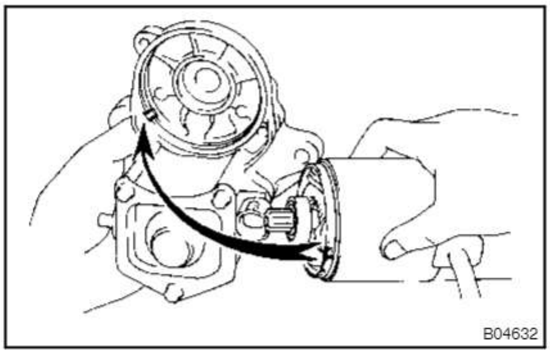

(c) Pull out the field frame together with the armature from the magnetic switch assembly.

NOTICE:

At the time of notice, please refer to the following items.
Align the protrusion of the field frame with the groove of the magnetic switch.

(d) Remove the O–ring from the field frame.

HINT:

At the time of assembly, please refer to the following items.
Use a new O–ring.

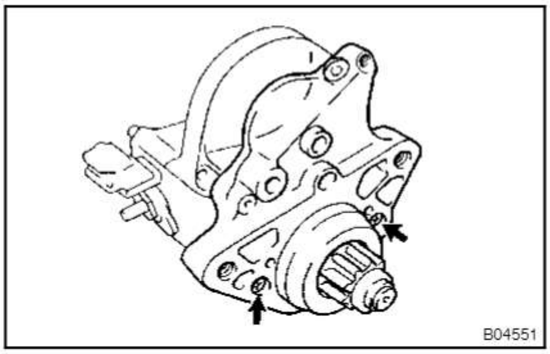

3. REMOVE STARTER HOUSING, CLUTCH ASSEMBLY AND GEAR

(a) 1.4 kW
Remove the 2 bolts.
Torque: 5.9 N·m (60 kgf·cm, 52 in.·lbf)

(b) 2.0 kW
Remove the 2 screws.
Torque: 9.3 N·m (95 kgf·cm, 82 in.·lbf)

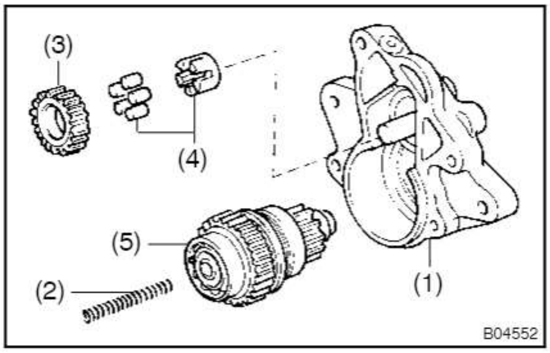

(c) Remove these parts from the magnetic switch assembly:
   (1) Starter housing
   (2) Return spring
   (3) Idler gear
   (4) Bearing
   (5) Starter clutch assembly

HINT:

At the time of assembly, please refer to the following items.
Apply grease to the return spring and insert the return spring into the clutch shaft hole.

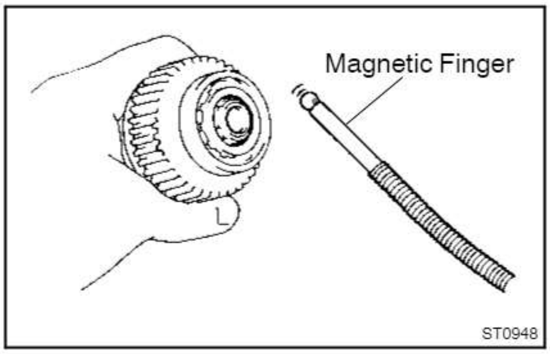

4. REMOVE STEEL BALL

Using a magnetic finger, remove the steel ball from the clutch shaft hole.

HINT:

At the time of assembly, please refer to the following items.

Apply grease to the steel ball and insert the steel ball into the clutch shaft hole.

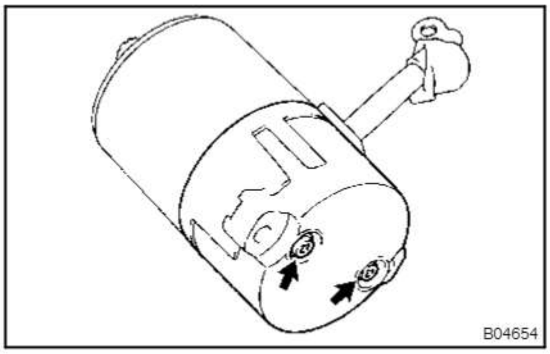

5. REMOVE BRUSH HOLDER

(a) Remove the 2 screws w/ O–ring and end cover from the field frame.

Torque:

1.4 kW: 1.5 N·m (15 kgf·cm, 13 in.·lbf)

2.0 kW: 3.8 N·m (39 kgf·cm, 34 in.·lbf)

(b) Remove the O–ring from the field frame.

HINT:

At the time of assembly, please refer to the following items.

Use a new O–ring.

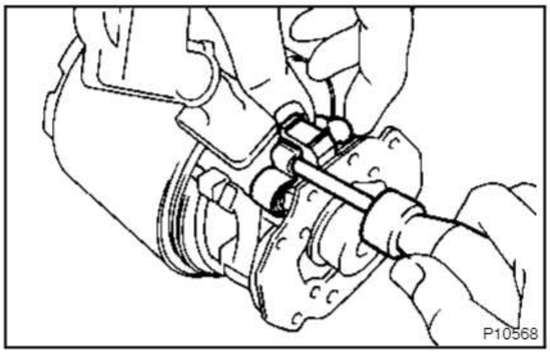

(c) Using a screwdriver, hold the spring back and disconnect the brush from the brush holder. Disconnect the 4 brushes, and remove the brush holder.

NOTICE:

Check that the positive (+) lead wires are not grounded.

6. REMOVE ARMATURE FROM FIELD FRAME

ST0A8–02

INSPECTION

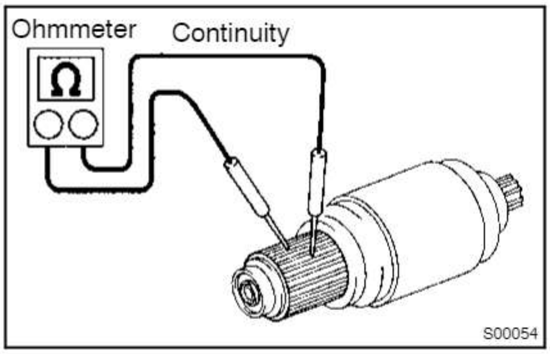

1. INSPECT COMMUTATOR FOR OPEN CIRCUIT

Using an ohmmeter, check that there is continuity between the segments of the commutator.

If there is no continuity between any segment, replace the armature.

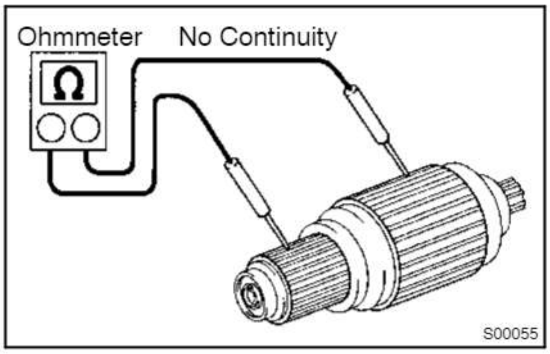

2. INSPECT COMMUTATOR FOR GROUND

Using an ohmmeter, check that there is no continuity between the commutator and armature coil core.

If there is continuity, replace the armature.

3. INSPECT COMMUTATOR FOR DIRTY AND BURNT SURFACE

If the surface is dirty or burnt, correct it with sandpaper (No.400) or on a lathe.

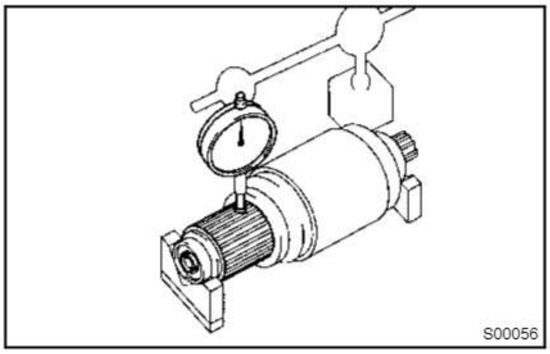

4. INSPECT COMMUTATOR CIRCLE RUNOUT

(a) Place the commutator on V–blocks.

(b) Using a dial indicator the circle runout.

Maximum circle runout:
0.05 mm (0.0020 in.)

If the circle runout is greater than maximum, correct it on a lathe.

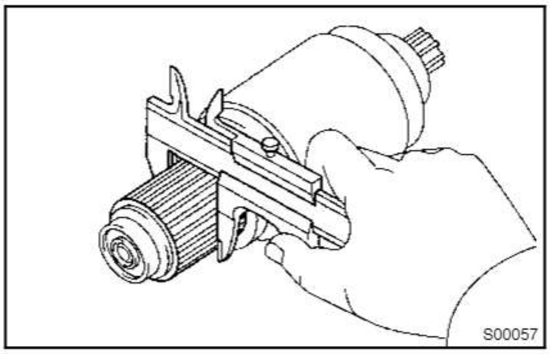

5. INSPECT COMMUTATOR DIAMETER

Using vernier calipers, measure the commutator diameter.

Standard diameter:
1.4 kW: 30.0 mm (1.181 in.)
2.0 kW: 35.0 mm (1.378 in.)
Minimum diameter:
1.4 kW: 29.0 mm (1.142 in.)
2.0 kW: 34.0 mm (1.339 in.)

If the diameter is less than minimum, replace the armature.

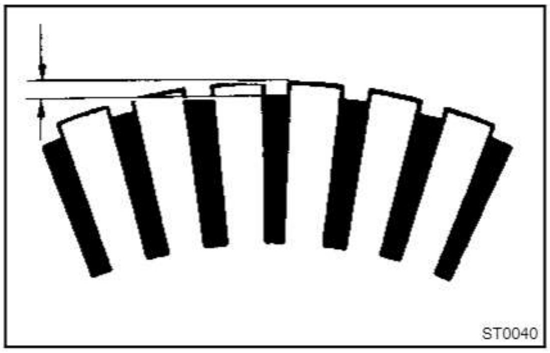

6. INSPECT UNDERCUT DEPTH

Check that the undercut depth is clean and free of foreign materials. Smooth out the edge.

Standard undercut depth:
1.4 kW: 0.6 mm (0.024 in.)
2.0 kW: 0.7 mm (0.028 in.)
Minimum undercut depth:
0.2 mm (0.008 in.)

If the undercut depth is less than minimum, correct it with a hacksaw blade.

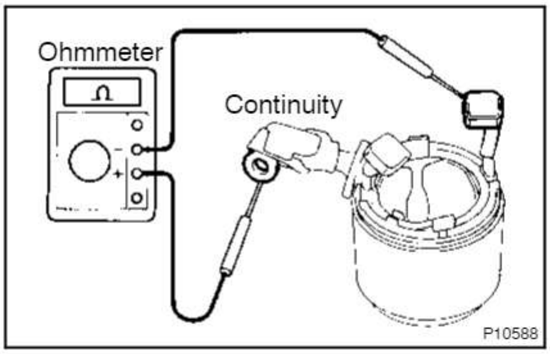

7. INSPECT FIELD COIL FOR OPEN CIRCUIT

Using an ohmmeter, check that there is continuity between the lead wire and field coil brush lead.

If there is no continuity, replace the field frame.

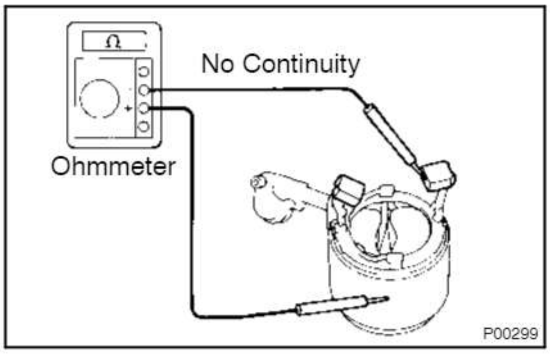

8. INSPECT THAT FIELD COIL IS NOT GROUNDED

Using an ohmmeter, check that there is no continuity between the field coil end and field frame.

If there is continuity, repair or replace the field frame.

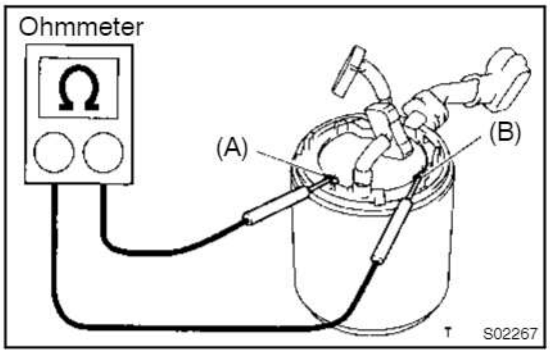

9. 2.0 kW:
INSPECT SHUNT COIL FOR OPEN CIRCUIT

Using an ohmmeter, measure the resistance between shunt coil terminals (A) and (B).

Resistance:
1.5 – 1.9 Ω at 20°C (68°F)

If the resistance is not as specified, replace the field frame.

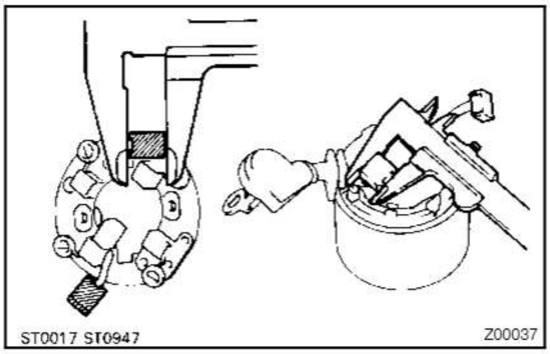

10. INSPECT BRUSH LENGTH

Using vernier calipers, measure the brush length.

Standard length:
1.4 kW: 15.5 mm (0.610 in.)
2.0 kW: 15.0 mm (0.591 in.)
Minimum length:
1.4 kW: 10.0 mm (0.394 in.)
2.0 kW: 9.0 mm (0.354 in.)

If the length is less than minimum, replace the brush holder and field frame.

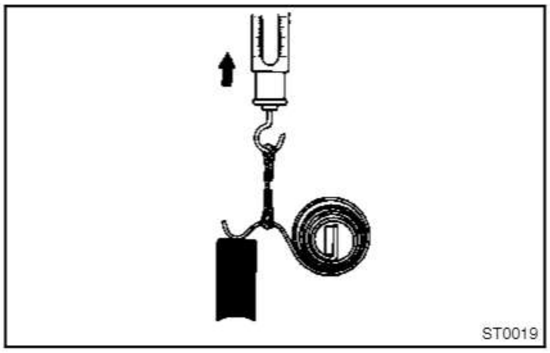

11. INSPECT BRUSH SPRING LOAD

Take the pull scale reading the instant the brush spring separates from the brush.

Standard spring installed load:
1.4 kW: 17.6 – 23.5 N (1.8 – 2.4 kgf, 4.0 – 5.3 lbf)
2.0 kW: 21.5 – 27.5 N (2.2 – 2.8 kgf, 4.8 – 6.2 lbf)
Minimum spring installed load:
1.4 kW: 11.8 N (1.2 kgf, 2.7 lbf)
2.0 kW: 12.7 N (1.3 kgf, 2.9 lbf)

If the installed load is less than minimum, replace the brush springs.

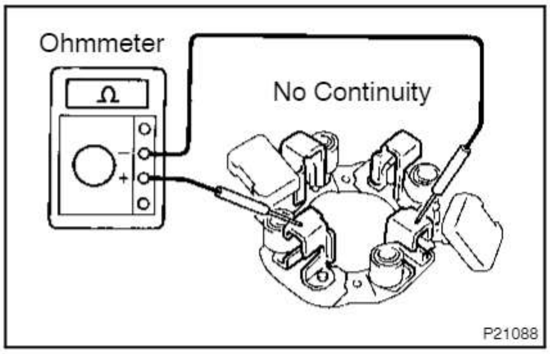

12. INSPECT BRUSH HOLDER INSULATION

Using an ohmmeter, check that there is no continuity between the positive (+) and negative (–) brush holders.

If there is continuity, repair or replace the brush holder.

13. INSPECT GEAR TEETH

Check the gear teeth on the pinion gear, idle gear and the clutch assembly for wear or damage.

If damaged, replace the gear or clutch assembly.

If damaged, also check the drive plate ring gear for wear or damage.

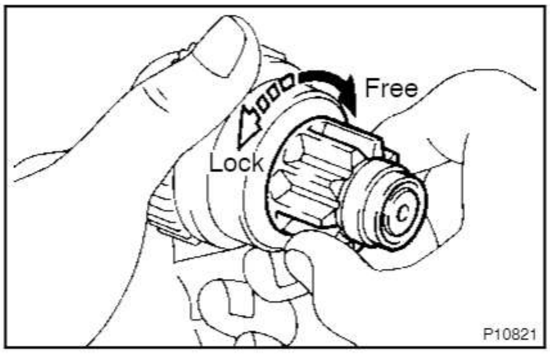

14. INSPECT CLUTCH PINION GEAR

Rotate the pinion gear clockwise, and check that it turns freely. Try to rotate the pinion gear counterclockwise and check that it locks.

If necessary, replace the clutch assembly.

15. INSPECT FRONT AND REAR BEARING

Turn the bearing by hand while applying inward force.

If resistance is felt or the bearing sticks, replace the bearing.

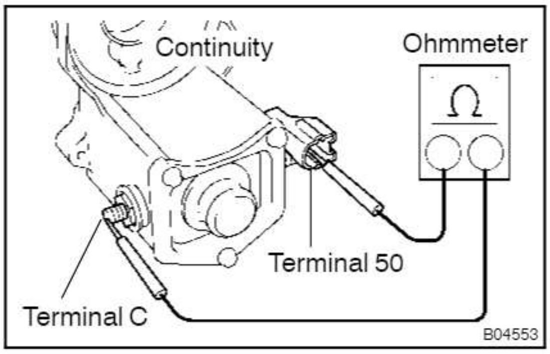

16. DO PULL–IN COIL OPEN CIRCUIT TEST

Using an ohmmeter, check that there is continuity between terminals 50 and C.

If there is no continuity, check and replace the magnetic switch.

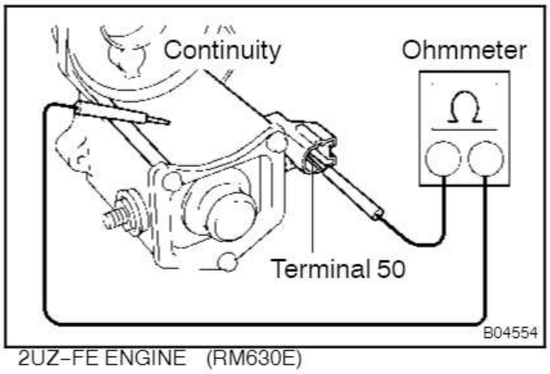

17. DO HOLD–IN COIL OPEN CIRCUIT TEST

Using an ohmmeter, check that there is continuity between terminal 50 and the switch body.

If there is no continuity, replace the magnetic switch.

ST0A9–02

REPLACEMENT

1. REPLACE REAR BEARING

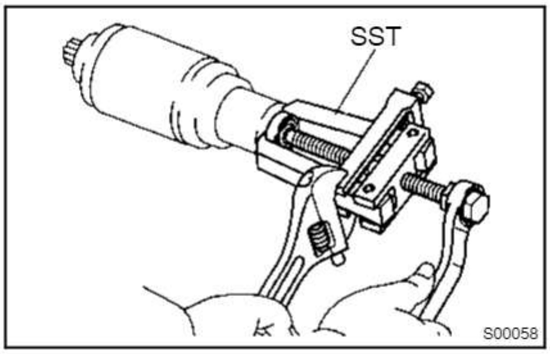

(a) Using SST, remove the bearing.
SST 09286–46011

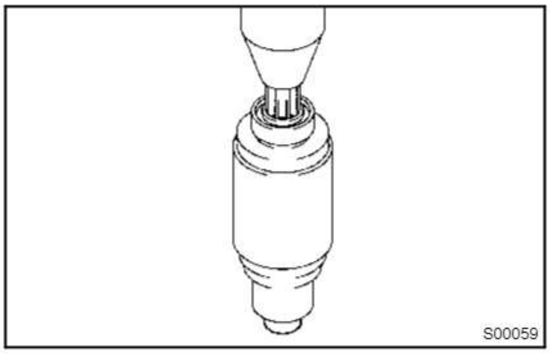

(b) Using a press, press in a new bearing.

2. REPLACE FRONT BEARING

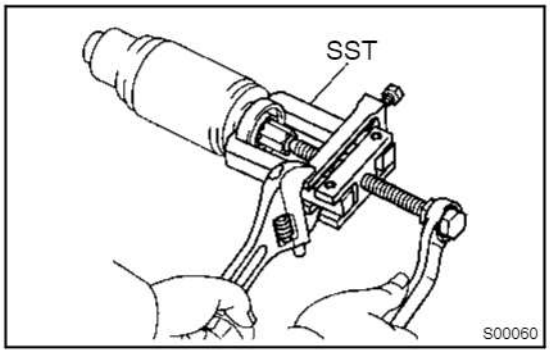

(a) Using SST, remove the bearing.
SST 09286–46011

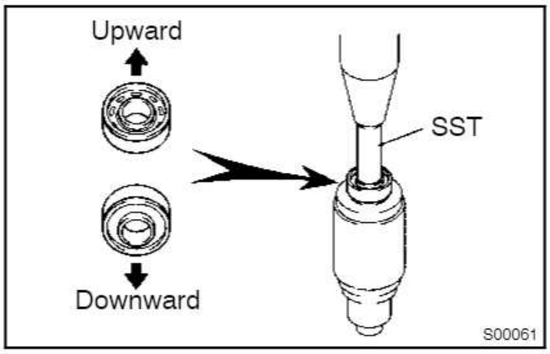

(b) Using SST and a press, press in a new bearing.

NOTICE:

Be careful of the bearing installation direction.

SST 09820–00030

3. REPLACE MAGNETIC SWITCH TERMINAL KIT PARTS

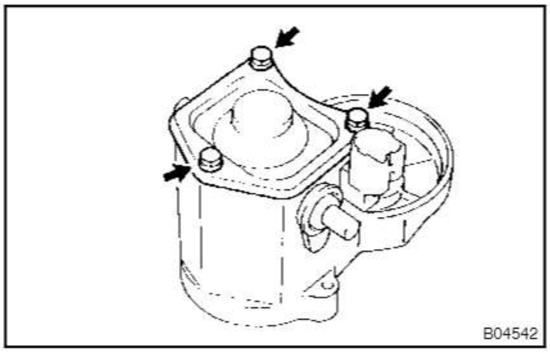

(a) Remove magnetic switch end cover.
Remove the 3 bolts, end cover, gasket and plunger.

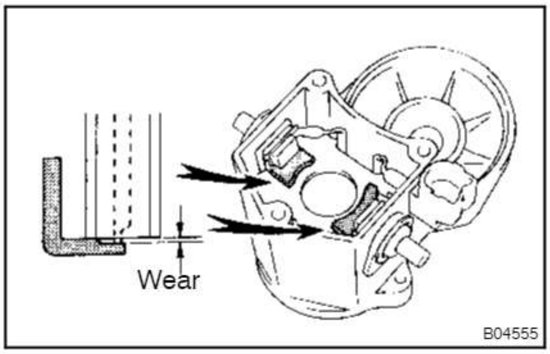

(b) Inspect contact plate for wear.
Using vernier calipers, measure the contact plate for depth of wear.
Maximum wear:
0.9 mm (0.035 in.)

If the depth of wear is greater than the maximum, replace the contact plate.

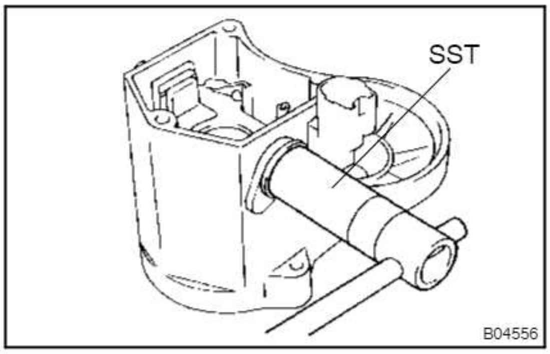

(c) Remove terminal kit parts.
  (1) Using SST, loosen the terminal nuts.
  SST 09810–38140
  (2) Terminal C:
  Remove the terminal nut, wave washer, terminal insulator (outside), O–ring, terminal bolt, contact plate and terminal insulator (inside).
  (3) Terminal 30:
  Remove the terminal nut, wave washer, terminal insulator (outside), O–ring, terminal bolt, contact plate, terminal insulator (inside) and insulation paper.

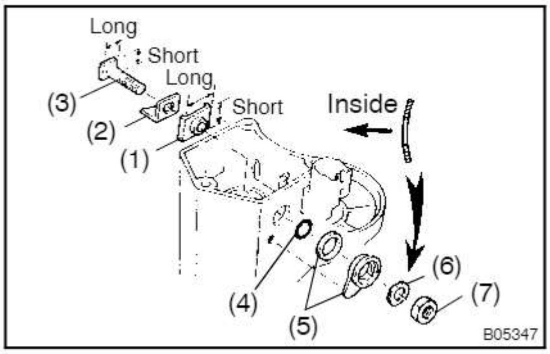

(d) Temporarily install these new terminal 30 kit parts:
  (1) Terminal insulator (inside)
  (2) Contact plate
  (3) Terminal bolt
  (4) O–ring
  (5) Packing and terminal insulator (outside)
  Install the packing to the terminal insulator, and install them.

HINT:
Match the protrusion of the insulator with the indentation of the housing.

  (6) Wave washer
  (7) Terminal nut

NOTICE:
Be careful to install the terminal insulator (inside) and wave washer in the correct direction.

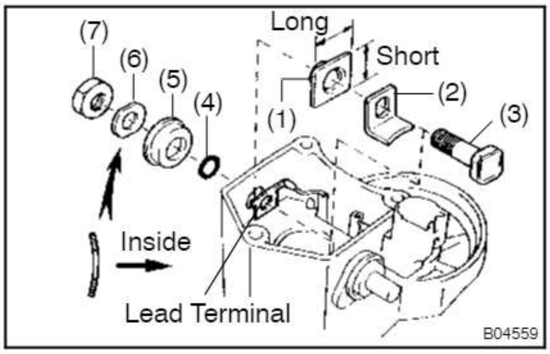

(e) Temporarily install these new terminal C kit parts:

- (1) Terminal insulator (inside)
- (2) Contact plate
- (3) Terminal bolt
- (4) O–ring
- (5) Terminal insulator (outside)
- (6) Wave washer
- (7) Terminal nut

NOTICE:

Be careful to install the terminal insulator (inside) and wave washer in the correct direction.

(f) Temporarily tighten the terminal nuts.

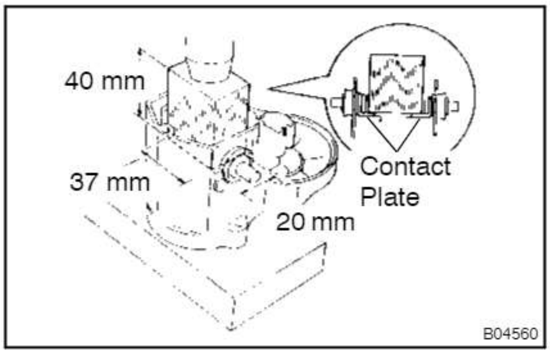

(g) Tighten terminal nuts.

(1) Put a wooden block on the contact plate and press it down with a hand press.

Dimensions of wooden block:
20 x 37 x 40 mm (0.79 x 1.46 x 1.57 in.)
Press force:
981 N (100 kgf, 221 lbf)

NOTICE:

- **Check the diameter of the hand press ram. Then calculate the gauge pressure of the press when 981 N (100 kgf, 221 lbf) of force is applied.**
  Gauge pressure:

$$(\mathrm{kgf/cm^2}) = \frac{100\ \mathrm{kgf}}{\left(\frac{\text{Ram diameter (cm)}}{2}\right)^2 \times 3.14\ (\pi)}$$

$$(\mathrm{psi}) = \frac{221\mathrm{lbf}}{\left(\frac{\text{Ram diameter (in.)}}{2}\right)^2 \times 3.14\ (\pi)}$$

$$(\mathrm{kPa}) = (\mathrm{kgf/cm^2}) \times 98.1$$

$$(\mathrm{kPa}) = (\mathrm{psi}) \times 6.9$$

- **If the contact plate is not pressed down with the specified pressure, the contact plate may tilt due to coil deformation or the tightening of the nut.**

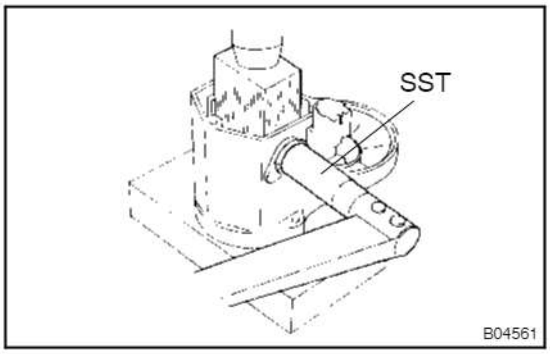

(2) Using SST, tighten the nuts to the specified torque.
SST 09810–38140
Torque: 17 N·m (170 kgf·cm, 13 ft·lbf)

NOTICE:
If the nut is over tightened, it may cause cracks on the inside of the insulator.

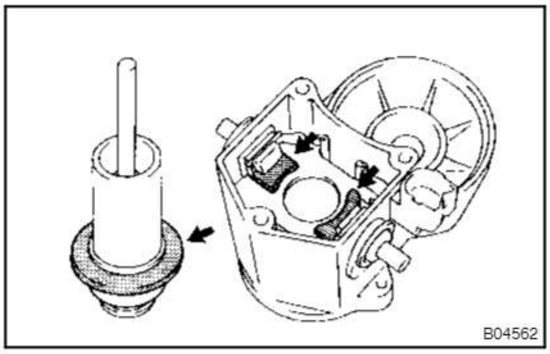

(h) Clean contact surfaces of contact plate and plunger.
Clean the contact surfaces of the remaining contact plate and plunger with a dry shop rag.

(i) Reinstall magnetic switch end cover.
Install the plunger, new gasket, end cover and lead clamp with the 3 bolts.
Torque:
1.4 kW: 2.5 N·m (25 kgf·cm, 22 in.·lbf)
2.0 kW: 3.6 N·m (37 kgf·cm, 32 in.·lbf)

ST0AA–02

REASSEMBLY

Reassembly is in the reverse order of disassembly.

(See page ST–5)

HINT:

At the time of assembly, please refer to the following items.

Use high–temperature grease to lubricate the bearing and gears when assembling the starter.

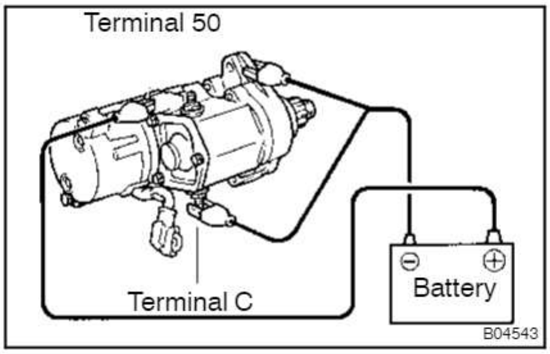

TEST

NOTICE:

These tests must be done within 3 to 5 seconds to avoid burning out the coil.

1. DO PULL–IN TEST

(a) Disconnect the field coil lead wire from terminal C.

(b) Connect the battery to the magnetic switch as shown. Check that the pinion gear moves outward.

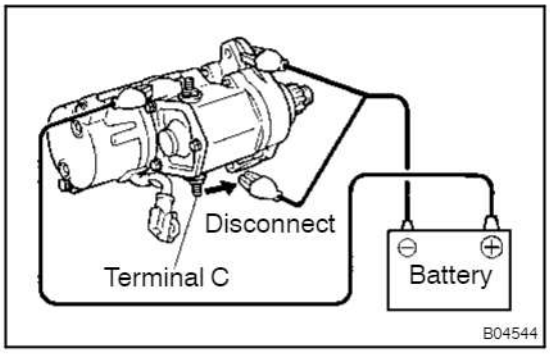

2. DO HOLD–IN TEST

While connected as above with the pinion gear out, disconnect the negative (–) lead from terminal C. Check that the pinion gear remains out.

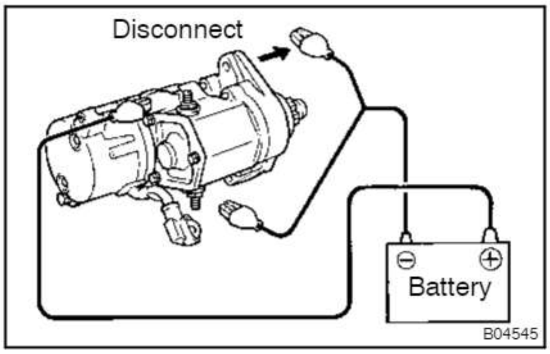

3. INSPECT CLUTCH PINION GEAR RETURN

Disconnect the negative (–) lead from the starter body. Check that the pinion gear returns inward.

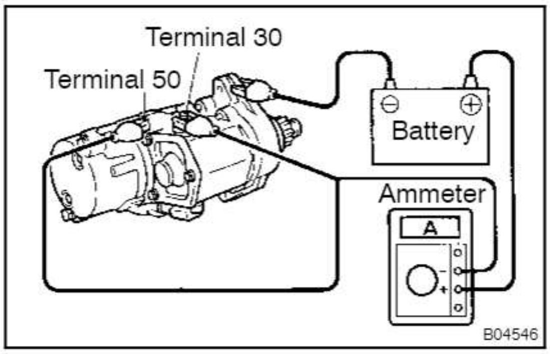

4. DO NO–LOAD PERFORMANCE TEST

(a) Connect the battery and ammeter to the starter as shown.

(b) Check that the starter rotates smoothly and steadily with the pinion gear moving out. Check that the ammeter shows the specified current.

Specified current:

1.4 kW: 90 A or less at 11.5 V

2.0 kW: 100 A or less at 11.5 V

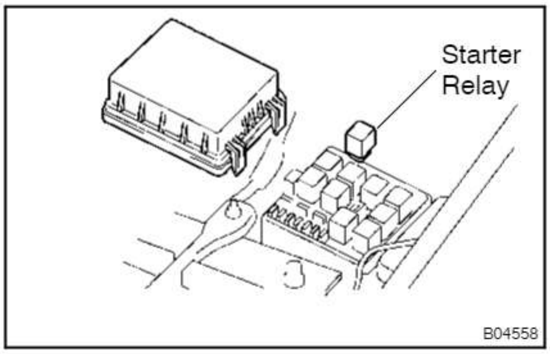

STARTER RELAY

INSPECTION

ST0AD–02

1. REMOVE STARTER RELAY (Marking: ”ST”)

Remove the relay box cover and starter relay.

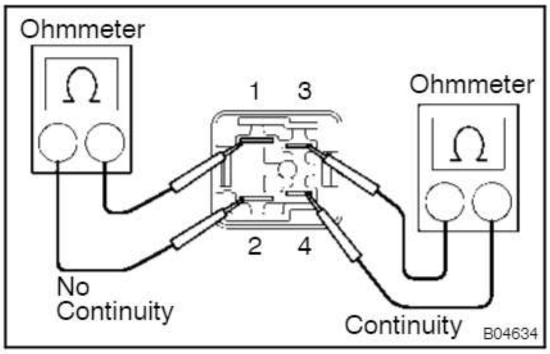

2. INSPECT RELAY CONTINUITY

(a) Using an ohmmeter, check that there is continuity between terminals 3 and 4.

If there is no continuity, replace the relay.

(b) Check that there is no continuity between terminals 1 and 2.

If there is continuity, replace the relay.

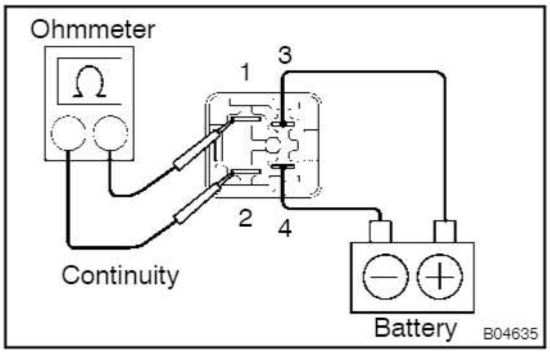

3. INSPECT RELAY OPERATION

(a) Apply battery voltage across terminals 3 and 4.

(b) Using an ohmmeter, check that there is continuity between terminals 1 and 2.

If there is no continuity, replace the relay.

4. REINSTALL STARTER RELAY

CHARGING SYSTEM

PRECAUTION

CH07S–02

1. **Check that the battery cables are connected to the correct terminals.**
2. **Disconnect the battery cables when the battery is given a quick charge.**
3. **Do not perform tests with a high voltage insulation resistance tester.**
4. **Never disconnect the battery while the engine is running.**

CH07T–02

ON–VEHICLE INSPECTION

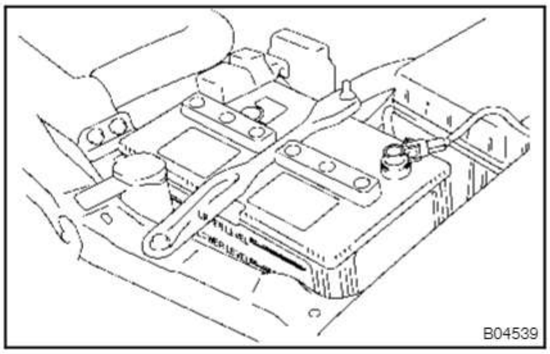

1. CHECK BATTERY ELECTROLYTE LEVEL

Check the electrolyte quantity of each cell.

Maintenance–Free Battery:

If under the lower level, replace the battery (or add distilled water if possible). and check the charging system.

Except Maintenance–Free Battery:

If under the lower level, add distilled water.

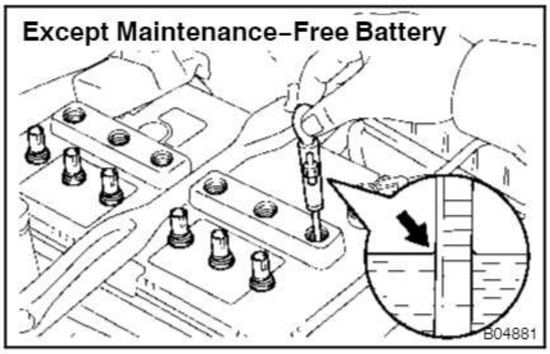

2. Except Maintenance–Free Battery: CHECK BATTERY SPECIFIC GRAVITY

Check the specific gravity of each cell.

Standard specific gravity:
1.25 – 1.29 at 20°C (68°F)

If the specific gravity is less than specification, charge the battery.

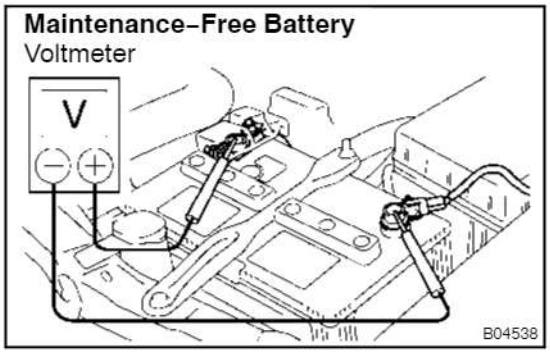

3. Maintenance–Free Battery: CHECK BATTERY VOLTAGE

(a) After having driven the vehicle and in the case that 20 minutes have not passed after having stopped the engine, turn the ignition switch ON and turn on the electrical system (headlight, blower motor, rear defogger etc.) for 60 seconds to remove the surface charge.

(b) Turn the ignition switch OFF and turn off the electrical systems.

(c) Measure the battery voltage between the negative (–) and positive (+) terminals of the battery.

Standard voltage:
12.5 – 12.9 V at 20°C (68°F)

If the voltage is less than specification, charge the battery.

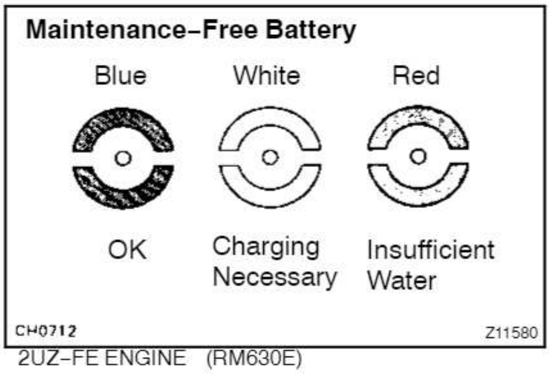

HINT:

Check the indicator as shown in the illustration.

4. CHECK BATTERY TERMINALS, FUSIBLE LINK AND FUSES

(a) Check that the battery terminals are not loose or corroded.

(b) Check the fusible link and fuses for continuity.

5. INSPECT DRIVE BELT

HINT:

A belt tensioner is used, so checking the belt tension is not necessary.

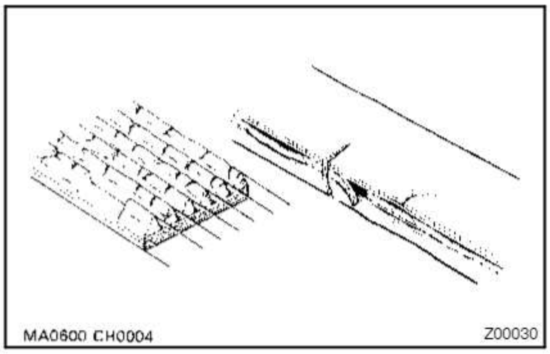

(a) Visually check the drive belt for excessive wear, frayed cords etc.

If necessary, replace the drive belt.

HINT:

- Cracks on the rib side of a drive belt are considered acceptable. If the drive belt has chunks missing from the ribs, it should be replaced.
- The drive belt tension can be released by turning the belt tensioner counterclockwise. The pulley bolt for the belt tensioner has a left–hand thread.

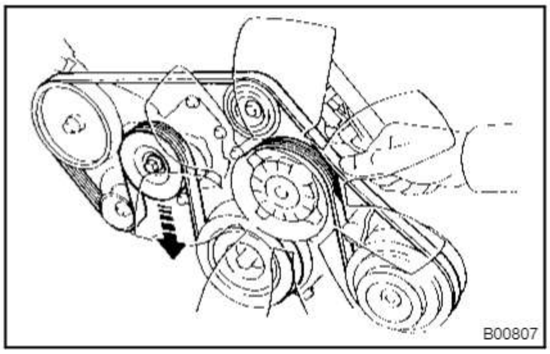

(b) Check the belt tensioner operation.

  - Check that the belt tensioner moves downward when the drive belt is pressed down at the points indicated in the illustration with approx. 98 N (10 kgf, 22.0 lbf) of force.
  - Check the alignment of the belt tensioner pulley to make sure the drive belt has not slipped off the pulley.

If necessary, replace the belt tensioner.

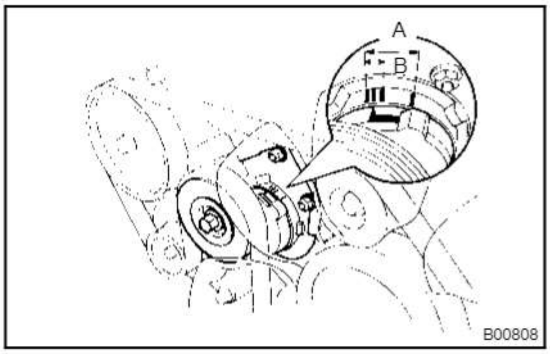

  - Check that the arrow mark on the belt tensioner falls within area A of the scale.

If it is outside area A, replace the drive belt.

HINT:

- When a new belt is installed, it should lie within area B. If not, the drive belt is not correct.

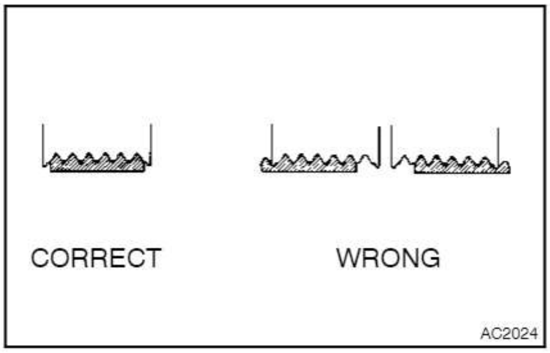

- After installing a belt, check that it fits properly in the ribbed grooves.
- Check by hand to confirm that the belt has not slipped out of the groove on the bottom of the pulley.

6. REMOVE ENGINE UNDER COVER NO.1

7. VISUALLY CHECK ALTERNATOR WIRING AND LISTEN FOR ABNORMAL NOISES

(a) Check that the wiring is in good condition.

(b) Check that there is no abnormal noise from the alternator while the engine is running.

8. CHECK CHARGE WARNING LIGHT CIRCUIT

(a) Warm up the engine and then turn it off.

(b) Switch off all accessories.

(c) Turn the ignition switch ON, and check that the charge warning light is lit.

(d) Start the engine, and check that the light goes off.

If the light does not go off as specified, troubleshoot the charge light circuit.

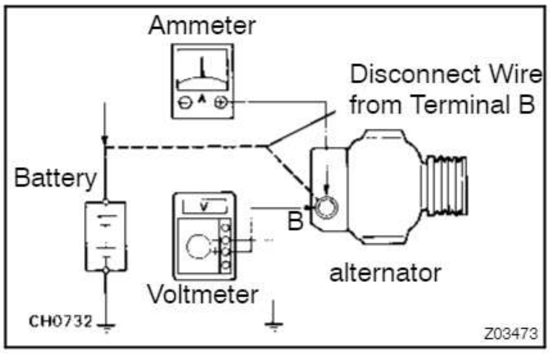

9. INSPECT CHARGING CIRCUIT WITHOUT LOAD

HINT:

If a battery/alternator tester is available, connect the tester to the charging circuit as per manufacturer's instructions.

(a) If a tester is not available, connect a voltmeter and ammeter to the charging circuit as follows:

- Disconnect the wire from terminal B of the alternator, and connect it to the negative (–) tester probe of the ammeter.
- Connect the positive (+) tester probe of the ammeter to terminal B of the alternator.
- Connect the positive (+) tester probe of the voltmeter to terminal B of the alternator.
- Ground the negative (–) tester probe of the voltmeter.

(b) Check the charging circuit as follows:

With the engine running from idling to 2,000 rpm, check the reading on the ammeter and voltmeter.

Standard amperage:

10 A or less

Standard voltage:

13.2 – 14.8 V

If the voltmeter reading is more than standard voltage, replace the IC regulator.

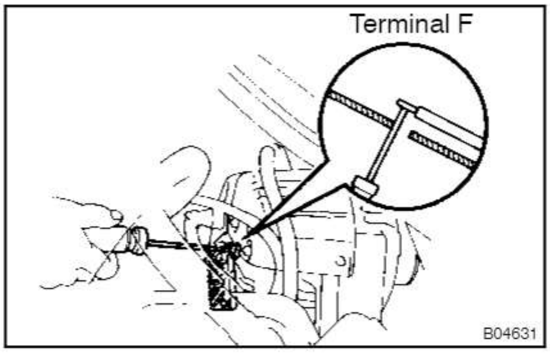

If the voltmeter reading is less than standard voltage, check the IC regulator and alternator as follows:

- Remove the alternator rear end cover, and with terminal F grounded, start the engine and check the voltmeter reading of terminal B.
- If the voltmeter reading is more than standard voltage, replace the IC regulator.
- If the voltmeter reading is less than standard voltage, check the alternator.

10. INSPECT CHARGING CIRCUIT WITH LOAD

(a) With the engine running at 2,000 rpm, turn on the high beam headlights and place the heater blower switch at HI.

(b) Check the reading on the ammeter.

Standard amperage:
30 A or more

If the ammeter reading is less than the standard amperage, repair the alternator.

HINT:

If the battery is fully charged, the indication will sometimes be less than standard amperage.

11. REINSTALL ENGINE UNDER COVER NO.1

ALTERNATOR

COMPONENTS

CH09M–02

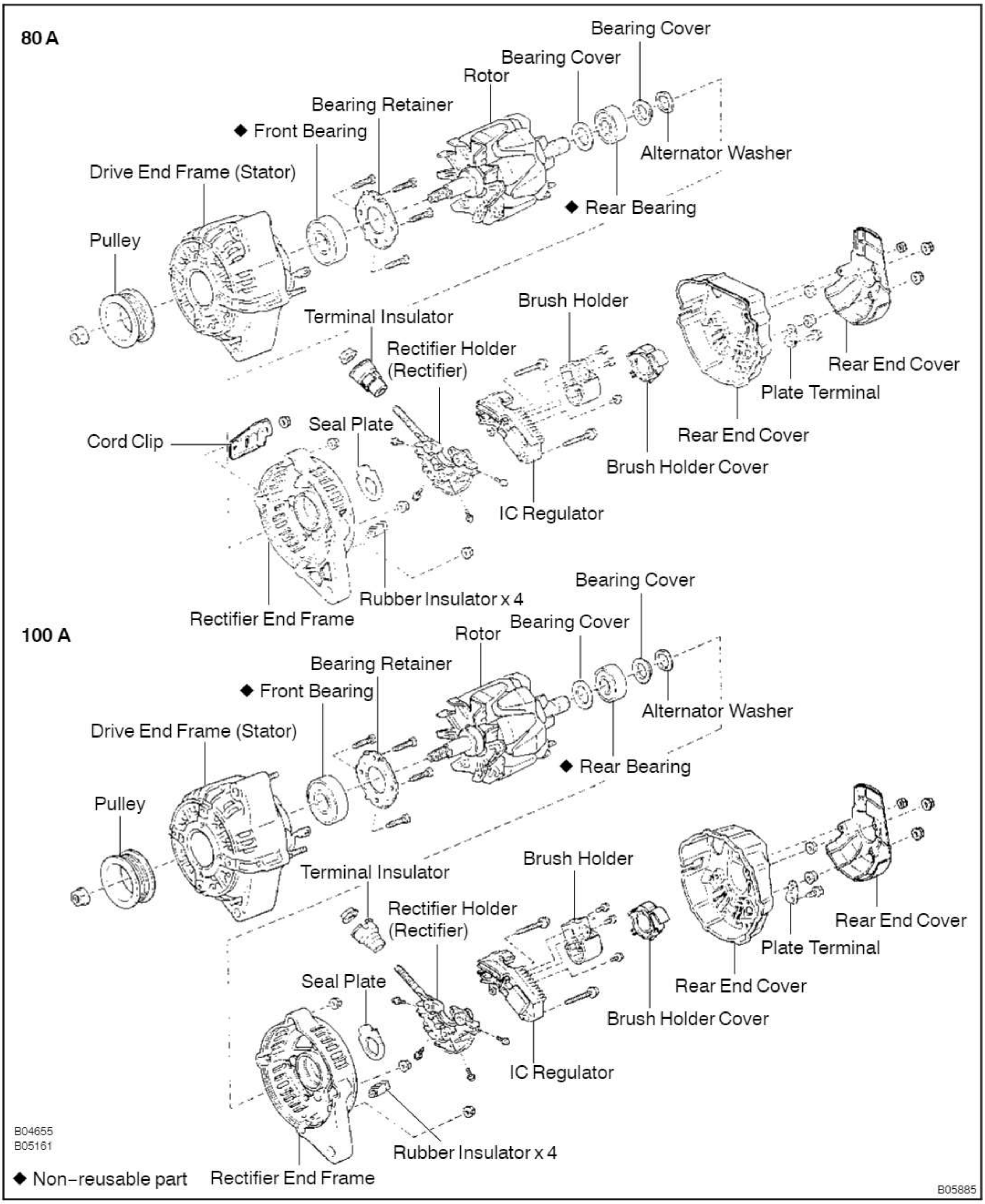

CH07W–02

DISASSEMBLY

1. REMOVE REAR END COVER

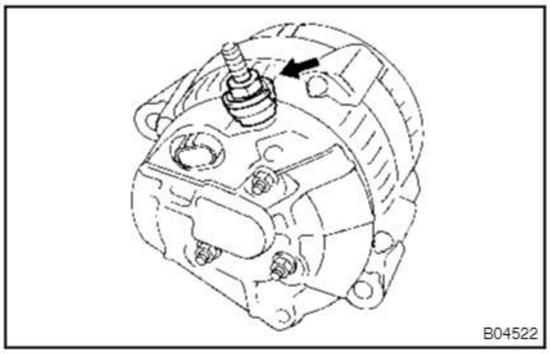

(a) Remove the nut and terminal insulator.

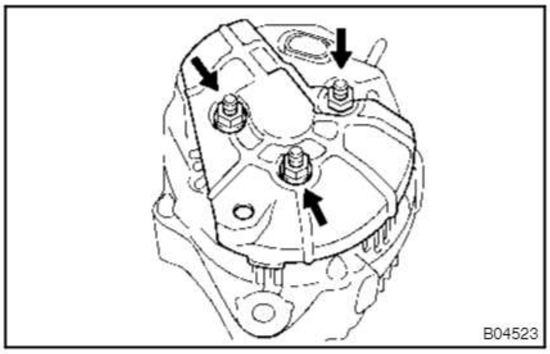

(b) Remove the 3 nuts and rear end cover.

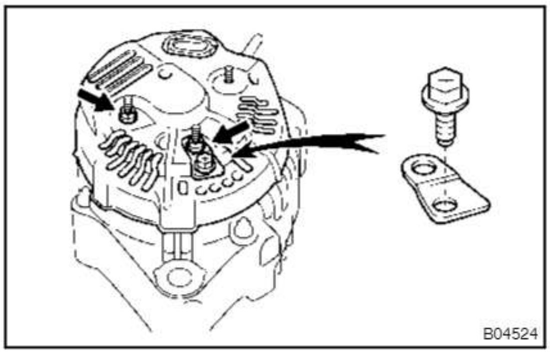

(c) Remove the 2 nuts, bolt, plate terminal and rear end cover.

2. REMOVE BRUSH HOLDER AND IC REGULATOR

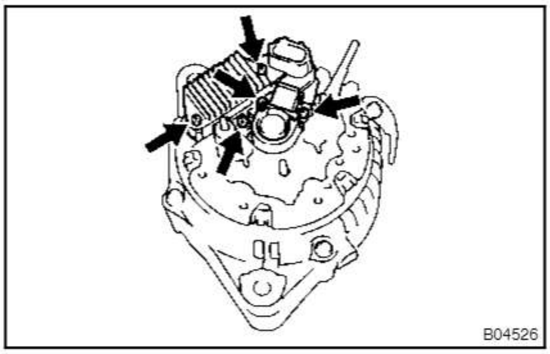

(a) Remove the brush holder cover from the brush holder.
(b) Remove the 5 screws, brush holder and IC regulator.
(c) Remove the seal plate from the rectifier end frame.

3. REMOVE RECTIFIER HOLDER

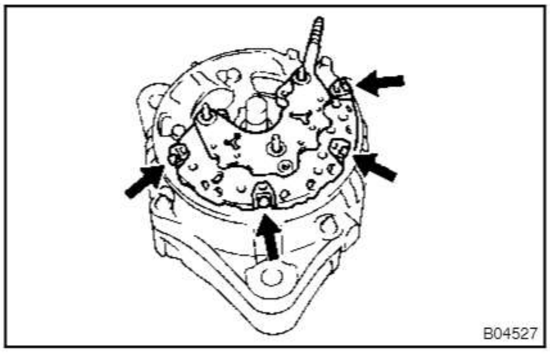

(a) Remove the 4 screws and rectifier holder.
(b) Remove the 4 rubber insulators.

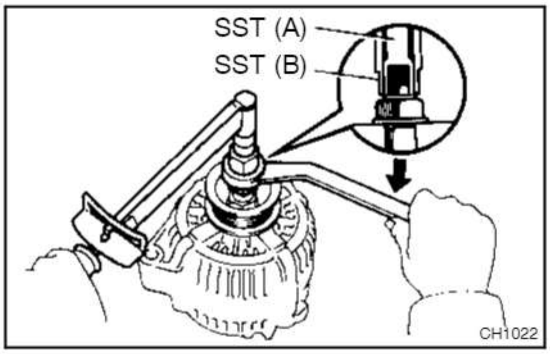

4. REMOVE PULLEY

(a) Hold SST (A) with a torque wrench, and tighten SST (B) clockwise to the specified torque.
SST 09820–63010
Torque: 39 N·m (400 kgf·cm, 29 ft·lbf)

(b) Check that SST (A) is secured to the rotor shaft.

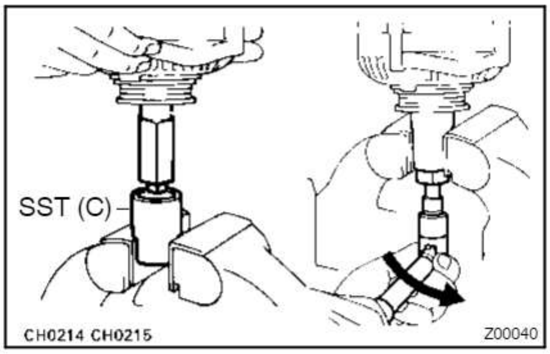

(c) As shown in the illustration, mount SST (C) in a vise, and install the alternator to SST (C).

(d) To loosen the pulley nut, turn SST (A) in the direction shown in the illustration.

NOTICE:

To prevent damage to the rotor shaft, do not loosen the pulley nut more than one–half of a turn.

(e) Remove the alternator from SST (C).

(f) Turn SST (B), and remove SST (A and B).

(g) Remove the pulley nut and pulley.

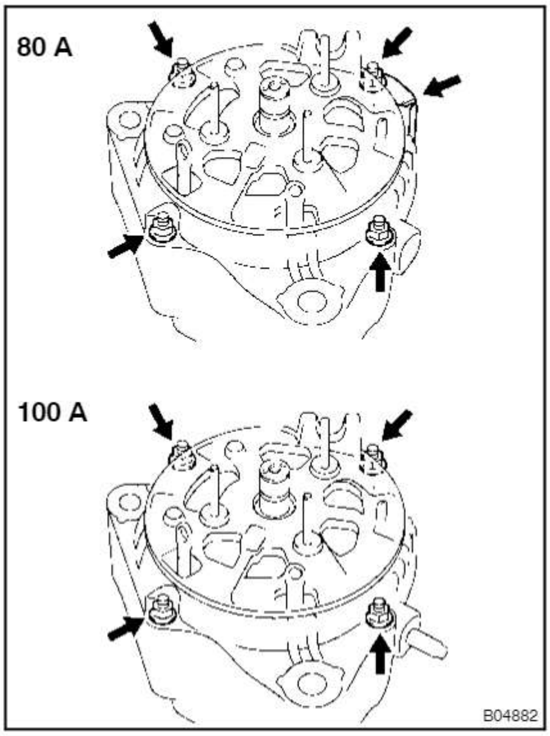

5. REMOVE RECTIFIER END FRAME

(a) 80 A:
Remove the 4 nuts and cord clip.

(b) 100 A:
Remove the 4 nuts.

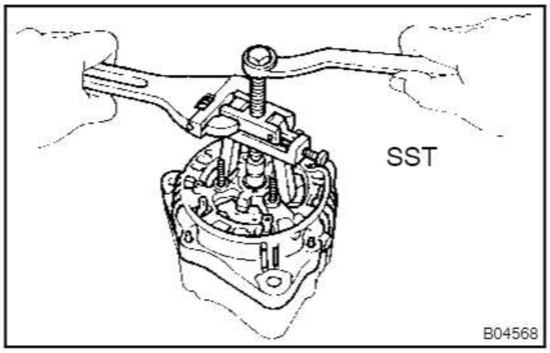

(c) Using SST, remove the rectifier end frame.
SST 09286–46011

(d) Remove the alternator washer.

6. REMOVE ROTOR FROM DRIVE END FRAME

CH07X–02

INSPECTION

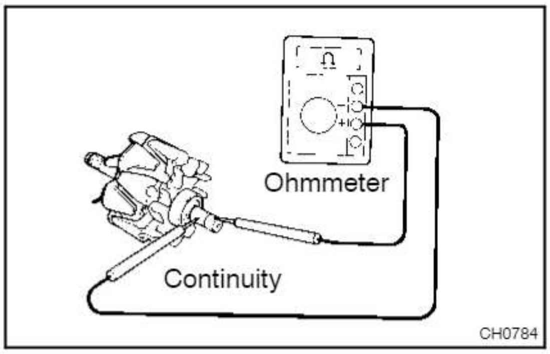

1. INSPECT ROTOR FOR OPEN CIRCUIT

Using an ohmmeter, check that there is continuity between the slip rings.

Standard resistance:
2.1 – 2.5 Ω at 20°C (68°F)

If there is no continuity, replace the rotor.

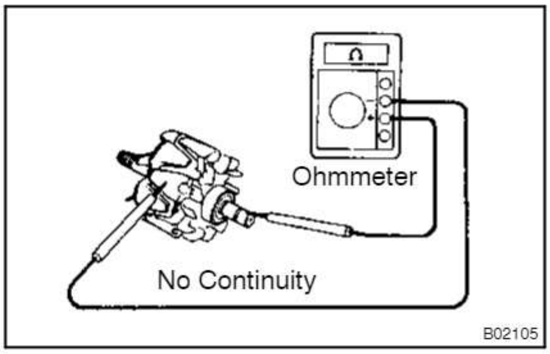

2. INSPECT ROTOR FOR GROUND

Using an ohmmeter, check that there is no continuity between the slip ring and rotor.

If there is continuity, replace the rotor.

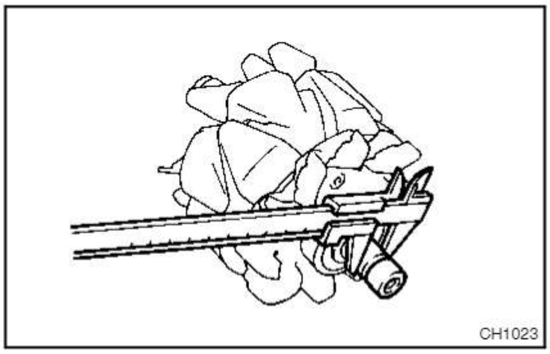

3. INSPECT SLIP RINGS

(a) Check that the slip rings are not rough or scored.

If rough or scored, replace the rotor.

(b) Using vernier calipers, measure the slip ring diameter.

Standard diameter:
14.2 – 14.4 mm (0.559 – 0.567 in.)
Minimum diameter:
12.8 mm (0.504 in.)

If the diameter is less than minimum, replace the rotor.

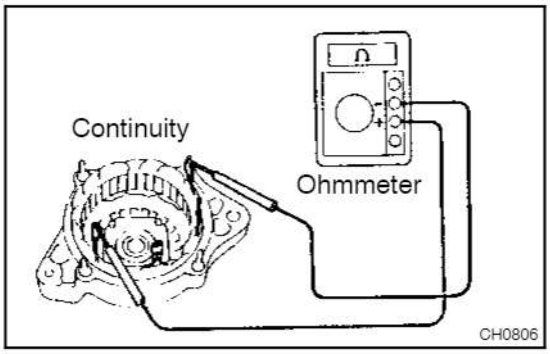

4. INSPECT STATOR FOR OPEN CIRCUIT

Using an ohmmeter, check that there is continuity between the coil leads.

If there is no continuity, replace the drive end frame assembly.

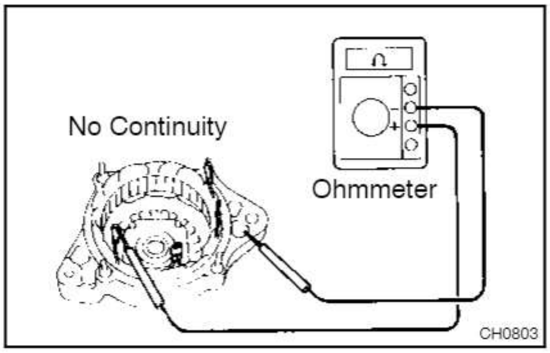

5. INSPECT STATOR FOR GROUND

Using an ohmmeter, check that there is no continuity between the coil lead and drive end frame.

If there is continuity, replace the drive end frame assembly.

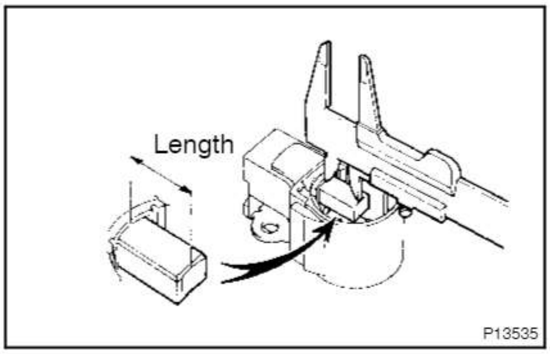

6. INSPECT EXPOSED BRUSH LENGTH

Using vernier calipers, measure the exposed brush length.

Standard exposed length:
10.5 mm (0.413 in.)
Minimum exposed length:
1.5 mm (0.059 in.)

If the exposed length is less than minimum, replace the brush holder.

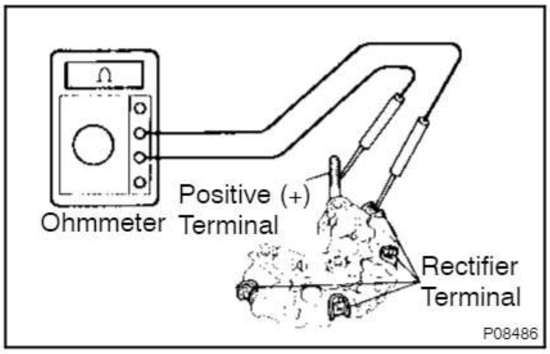

7. INSPECT POSITIVE RECTIFIER

(a) Using an ohmmeter, connect one tester probe to the positive (+) terminal and the other to each rectifier terminal.
(b) Reverse the polarity of the tester probes and repeat step (a).
(c) Check that one shows continuity and the other shows no continuity.

If continuity is not as specified, replace the rectifier holder.

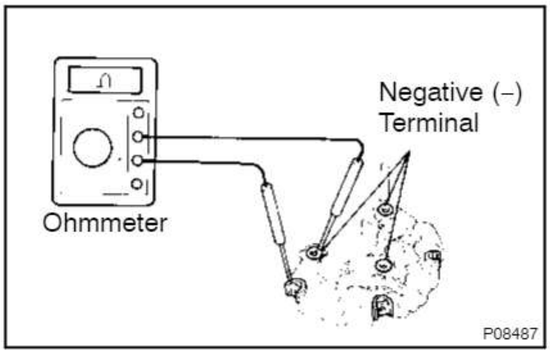

8. INSPECT NEGATIVE RECTIFIER

(a) Using an ohmmeter, connect one tester probe to each negative (–) terminal and the other to each rectifier terminal.
(b) Reverse the polarity of the tester probes and repeat step (a).
(c) Check that one shows continuity and the other shows no continuity.

If continuity is not as specified, replace the rectifier holder.

9. INSPECT FRONT AND REAR BEARING

Check that the bearing is not rough or worn.

If necessary, replace the bearing.

CH07Y–02

REPLACEMENT

1. REPLACE FRONT BEARING

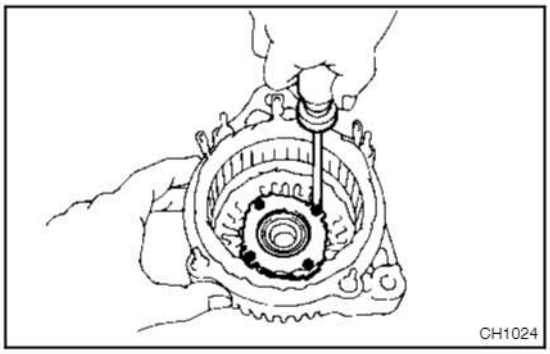

(a) Remove the 4 screws and bearing retainer.

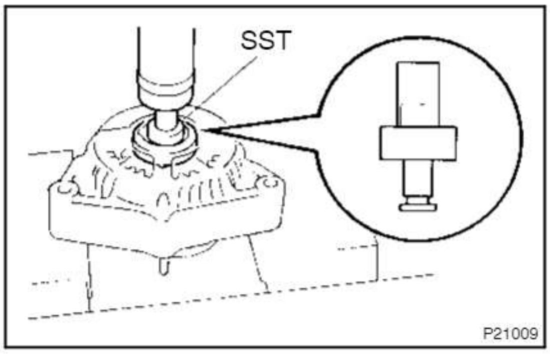

(b) Using SST and a press, press out the bearing.
SST 09950–60010 (09951–00260, 09952–06010)

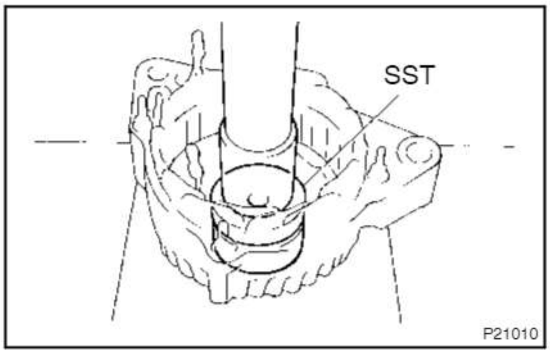

(c) Using SST and a press, press in a new bearing.
SST 09950–60010 (09951–00500)

(d) Install the bearing retainer with the 4 screws.
Torque: 3.0 N·m (31 kgf·cm, 27 in.·lbf)

2. REPLACE REAR BEARING

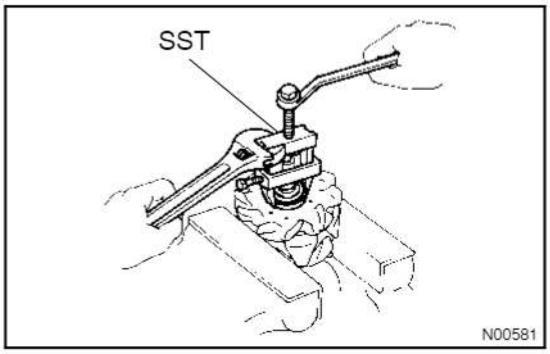

(a) Using SST, remove the bearing cover (outside) and bearing.
SST 09820–00021

NOTICE:
Be careful not to damage the fan.

(b) Remove the bearing cover (inside).

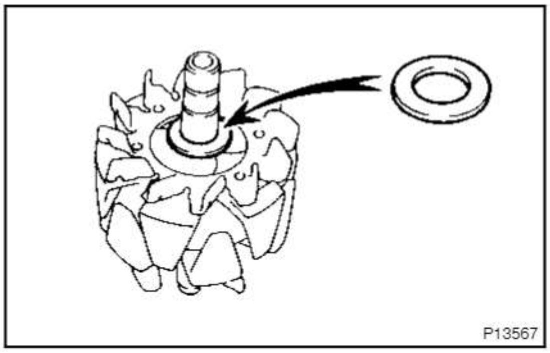

(c) Place the bearing cover (inside) on the rotor.

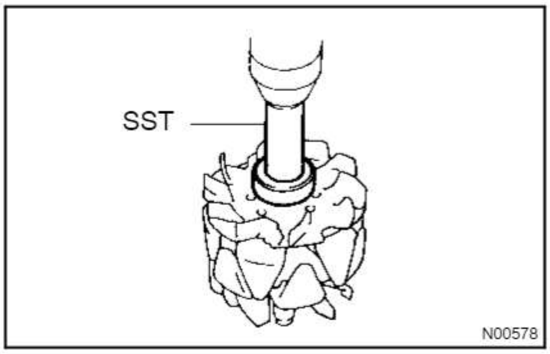

(d) Using SST and a press, press in a new bearing.
SST 09820–00030

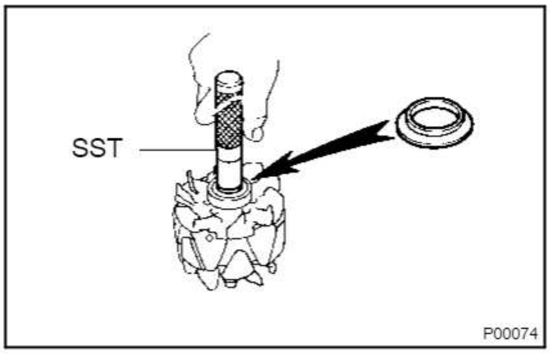

(e) Using SST, push in the bearing cover (outside).
SST 09285–76010

REASSEMBLY

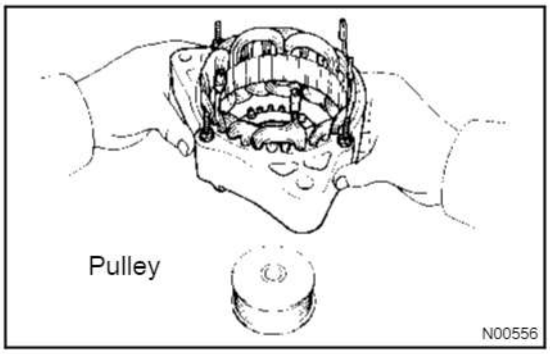

1. **PLACE DRIVE END FRAME ON PULLEY**
2. **INSTALL ROTOR TO DRIVE END FRAME**

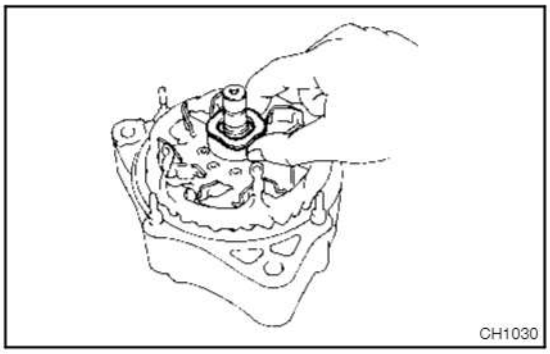

3. **INSTALL RECTIFIER END FRAME**

(a) Place the alternator washer on the rotor.

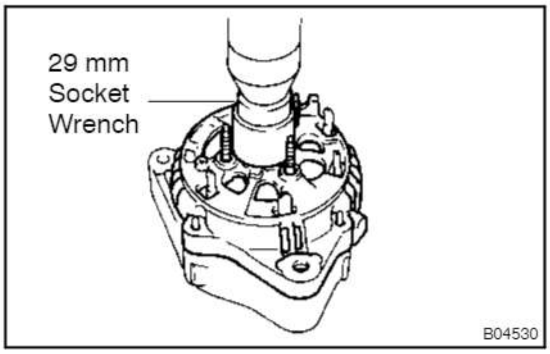

(b) Using a 29 mm socket wrench and press, slowly press in the rectifier end frame.

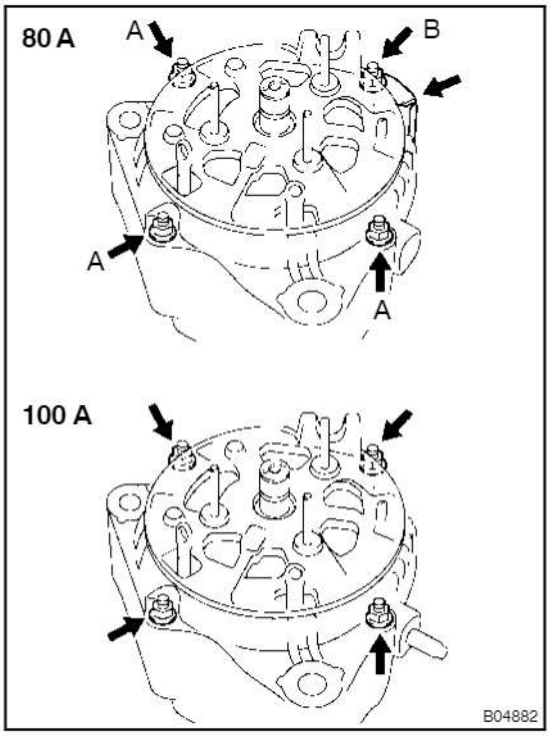

(c) 80 A:
Install the cord clip and 4 nuts.
Torque:
A: 4.5 N·m (46 kgf·cm, 40 in.·lbf)
B: 5.4 N·m (55 kgf·cm, 48 in.·lbf)

(d) 100 A:
Install the 4 nuts.
Torque: 4.5 N·m (46 kgf·cm, 40 in.·lbf)

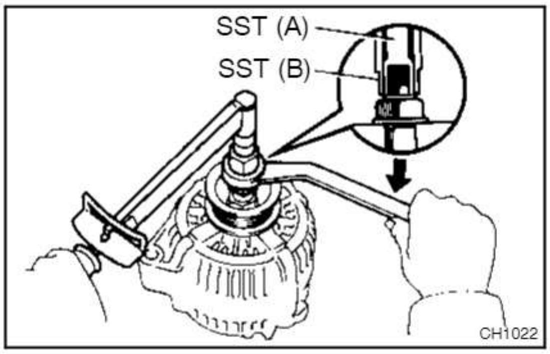

4. INSTALL PULLEY

(a) Install the pulley to the rotor shaft by tightening the pulley nut by hand.

(b) Hold SST (A) with a torque wrench, and tighten SST (B) clockwise to the specified torque.

SST 09820–63010

Torque: 39 N·m (400 kgf·cm, 29 ft·lbf)

(c) Check that SST (A) is secured to the pulley shaft.

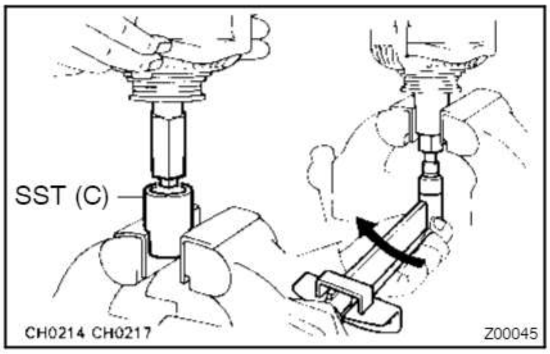

(d) As shown in the illustration, mount SST (C) in a vise, and install the alternator to SST (C).

(e) To torque the pulley nut, turn SST (A) in the direction shown in the illustration.

Torque: 110.5 N·m (1,128 kgf·cm, 81 ft·lbf)

(f) Remove the alternator from SST (C).

(g) Turn SST (B), and remove SST (A and B).

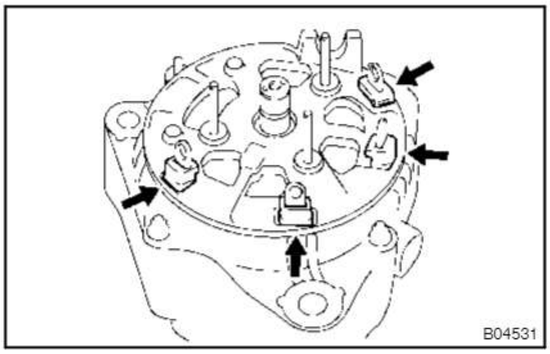

5. INSTALL RECTIFIER HOLDER

(a) Install the 4 rubber insulators on the lead wires.

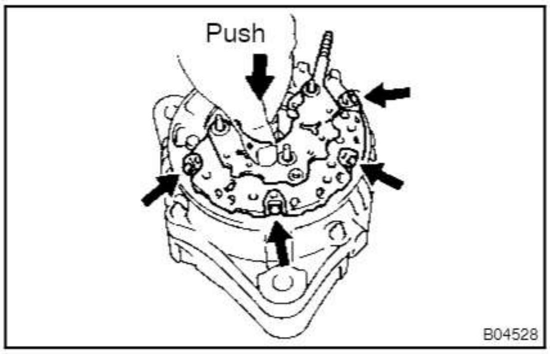

(b) Install the rectifier holder while pushing it with the 4 screws.

Torque: 2.94 N·m (30 kgf·cm, 26 in.·lbf)

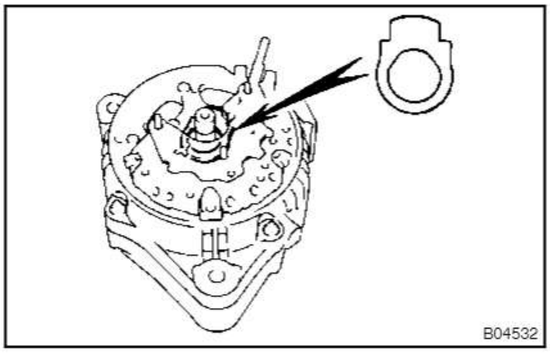

6. INSTALL IC REGULATOR AND BRUSH HOLDER

(a) Place the seal plate on the rectifier end frame.

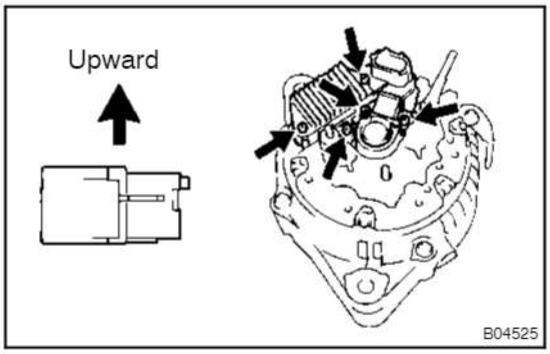

(b) Place the IC regulator and brush holder on the rectifier end frame.

NOTICE:
Be careful of the holder installation direction.

(c) Install the 5 screws.
Torque: 2.0 N·m (20 kgf·cm, 18 in.·lbf)

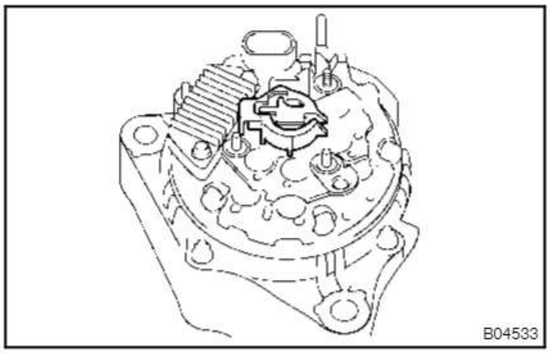

(d) Place the brush holder cover on the brush holder.

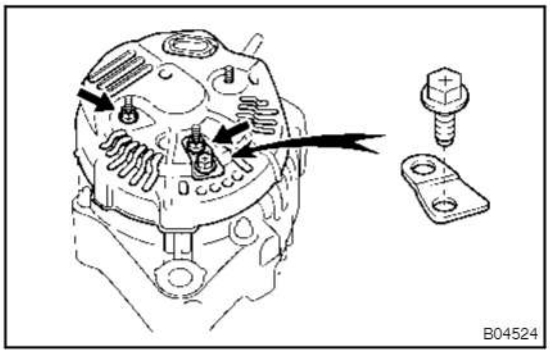

7. **INSTALL REAR END COVER**

(a) Install the end cover and plate terminal with the 2 nuts and bolt.
Torque:
Bolt: 3.8 N·m (39 kgf·cm, 34 in.·lbf)
Nut: 4.4 N·m (45 kgf·cm, 39 in.·lbf)

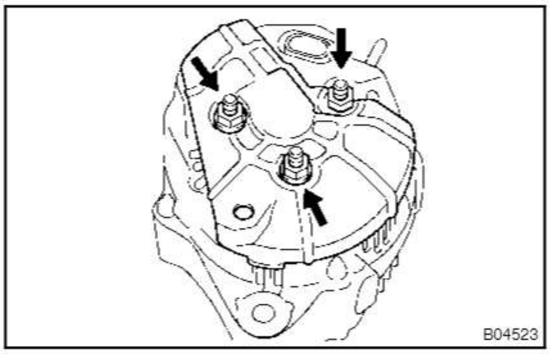

(b) Install the rear end cover with the 3 nuts.
Torque: 4.4 N·m (45 kgf·cm, 39 in.·lbf)

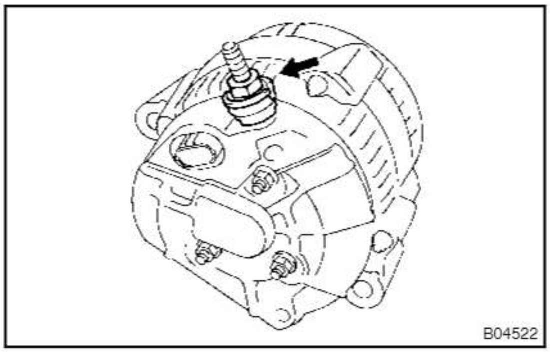

(c) Install the terminal insulator with the nut.
Torque: 4.1 N·m (42 kgf·cm, 36 in.·lbf)

8. **CHECK THAT ROTOR ROTATES SMOOTHLY**

ENGINE MECHANICAL

SST (Special Service Tools)

PP1PZ–01

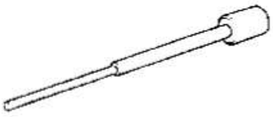	09201–01055	Valve Guide Bushing Remover & Replacer 5.5	
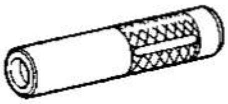	09201–41020	Valve Stem Oil Seal Replacer	
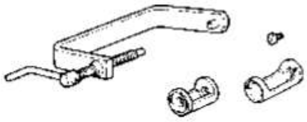	09202–70020	Valve Spring Compressor	
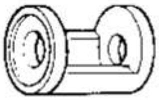	(09202–00010)	Attachment	
	09213–70010	Crankshaft Pulley Holding Tool	
	09222–30010	Connecting Rod Bushing Remover & Replacer	
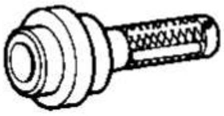	09223–46011	Crankshaft Front Oil Seal Replacer	Crankshaft pulley Crankshaft timing pulley
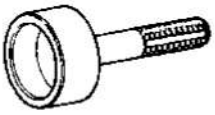	09223–56010	Crankshaft Rear Oil Seal Replacer	
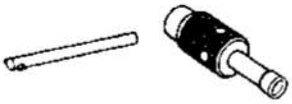	09243–00020	Idle Adjusting Screw Wrench	
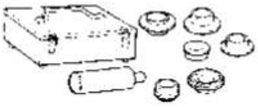	09316–60011	Transmission & Transfer Bearing Replacer	
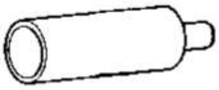	(09316–00011)	Replacer Pipe	Crankshaft front oil seal
	09330–00021	Companion Flange Holding Tool	Crankshaft pulley

	09843–18020	Diagnosis Check Wire	
	09950–50010	Puller C Set	
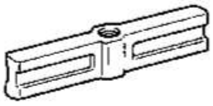	(09951–05010)	Hanger 150	Crankshaft pulley Crankshaft timing pulley
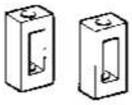	(09952–05010)	Slide Arm	Crankshaft pulley Crankshaft timing pulley
	(09953–05010)	Center Bolt 100	Crankshaft pulley Crankshaft timing pulley
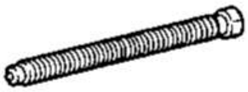	(09953–05020)	Center Bolt 150	Crankshaft pulley Crankshaft timing pulley
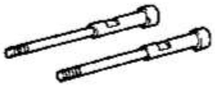	(09954–05010)	Claw No.1	Crankshaft timing pulley
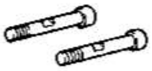	(09954–05020)	Claw No.2	Crankshaft pulley
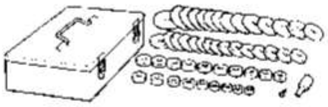	09950–60010	Replacer Set	
	(09951–00240)	Replacer 24	Spark plug tube gasket
	(09951–00460)	Replacer 46	Spark plug tube gasket
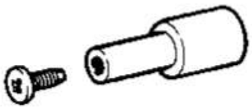	(09952–06010)	Adapter	Spark plug tube gasket
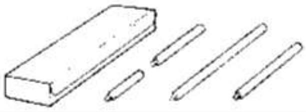	09950–70010	Handle Set	

	(09951–07100)	Handle 100	Spark plug tube gasket Valve guide bushing
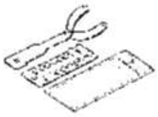	09960–10010	Variable Pin Wrench Set	
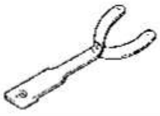	(09962–01000)	Variable Pin Wrench Arm Assy	Camshaft sub–gear Camshaft timing pulley
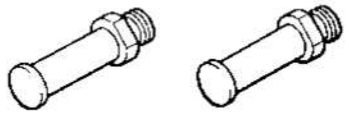	(09963–01000)	Pin 10	Camshaft timing pulley
	(09963–00500)	Pin 5	Camshaft sub–gear

RECOMMENDED TOOLS

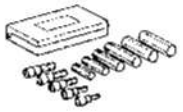	09040–00010	Hexagon Wrench Set .	
	09200–00010	Engine Adjust Kit .	
	09904–00010	Expander Set .	

PP1BM–04

EQUIPMENT

Caliper gauge	
CO meter	
Compression gauge	
Connecting rod aligner	
Cylinder gauge	
Dial indicator	
Dye penetrant	
Engine tune–up tester	
Groove cleaning tool	
Heater	
Magnetic finger	
Micrometer	
Pin hole grinder	
Piston ring compressor	
Piston ring expander	
Plastigage	
Precision straight edge	
Press	
Ridge reamer	
Soft brush	
Solvent	
Spring tester	Valve spring
Steel square	Valve spring
Thermometer	
Torque wrench	
Valve seat cutter	
V–block	
Vernier calipers	
Wire brush	Valve

PP1BN–04

SSM (Special Service Materials)

08826–00080	Seal Packing Black or equivalent (FIPG)	Camshaft bearing cap Cylinder head semi–circular plug Cylinder head cover Rear oil sear retainer
08826–00080	Seal Packing Black or equivalent (FIPG)	Camshaft housing plug
08826–00100	Seal Packing 1282B, THREE BOND 1282B or equivalent (FIPG)	Coolant drain union
08833–00070	Adhesive 1324, THREE BOND 1324 or equivalent	Drive plate bolt Flywheel bolt Spark plug tube
08833–00080	Adhesive 1344 THREE BOND 1344 LOCTITE 242 or equivalent	No.1 idler pulley bolt

EMISSION CONTROL

PP1PW–01

EQUIPMENT

MITYVAC (Hand–held vacuum pump)	

ELECTRONIC FUEL INJECTION

SST (Special Service Tools)

PP1NR–02

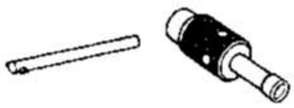	09243–00020	Idle Adjusting Screw Wrench	w/o TWC
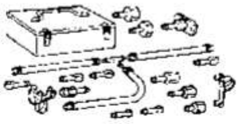	09268–41047	Injection Measuring Tool Set	
	(09268–41091)	NO.7 Union	
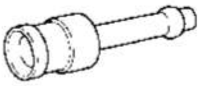	(09268–41110)	Adaptor	
	(09268–41300)	Clamp	
	09268–45012	EFI Fuel Pressure Gauge	
	(09268–41190)	Adaptor	
	(90405–06167)	I Union	
	09612–24014	Steering Gear Housing Overhaul Tool Set	
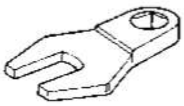	(09617–24011)	Steering Rack Wrench	Fuel pressure pulsation damper
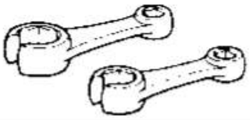	09631–22020	Power Steering Hose Nut 14 x 17 mm Wrench Set	Fuel line flare nut
	09816–30010	Oil Pressure Switch Socket	Knock sensor

	09842–30070 Wiring "F" EFI Inspection	

PP0U4–03

RECOMMENDED TOOLS

	09082–00040	TOYOTA Electrical Tester.	
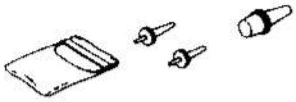	09258–00030	Hose Plug Set .	Plug for vacuum hose, fuel hose etc.

EQUIPMENT

Graduated cylinder	Injector
OBD II scan tool	
Sound scope	Injector
Torque wrench	
Vacuum gauge	

COOLING

EQUIPMENT

PP1P1–01

Heater	Thermostat
Radiator cap tester	
Thermometer	Thermostat
Torque wrench	

COOLANT

Item			Capacity	Classification
Engine coolant				Ethylene–glycol base
	Europe		15.3 liters (16.2 US qts, 13.4 Imp. qts)	
	G.C.C countries	M/T	15.2 liters (16.1 US qts, 13.3 Imp. qts)	
		A/T	14.8 liters (15.6 US qts, 13.0 Imp. qts)	
	Australia		14.8 liters (15.6 US qts, 13.0 Imp. qts)	
		w/ Rear heater	15.3 liters (16.2 US qts, 13.4 Imp. qts)	
	Others	M/T	15.7 liters (16.7 US qts, 13.7 Imp. qts)	
		A/T	15.3 liters (16.2 US qts, 13.4 Imp. qts)	

PP1P3–01

SSM (Special Service Materials)

08826–00100	Seal Packing 1282B, THREE BOND 1282B or equivalent (FIPG)	Water pump Water inlet housing

LUBRICATION

SST (Special Service Tools)

	09032–00100	Oil Pan Seal Cutter	
	09228–07501	Oil Filter Wrench	

RECOMMENDED TOOLS

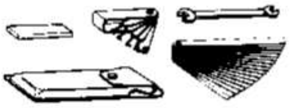	09200–00010	Engine Adjust Kit .	
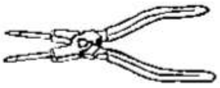	09905–00013	Snap Ring Pliers .	

PP1P6–01

EQUIPMENT

Oil pressure gauge	
Precision straight edge	
Torque wrench	

LUBRICANT

Item	Capacity	Classification
Engine oil Dry fill Drain and refill w/ Oil filter change w/o Oil filter change	8.0 liters (8.5 US qts, 7.0 Imp. qts) 6.8 liters (7.2 US qts, 6.0 Imp. qts) 6.4 liters (6.8 US qts, 5.6 Imp. qts)	API grade SH, Energy–Conserving II or SJ, Energy Conserving or ILSAC multigrade engine oil.

SSM (Special Service Materials)

08826–00080	Seal Packing Black or equivalent (FIPG)	Oil pump No.1 oil pan No.2 oil pan
08833–00080	Adhesive 1344 THREE BOND 1344 LOCTITE 242 or equivalent	Oil pressure switch

IGNITION

RECOMMENDED TOOLS

PP1PX–01

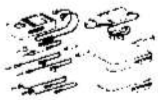	09082–00050	TOYOTA Electrical Tester Set.	
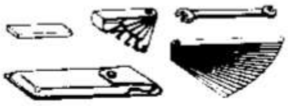	09200–00010	Engine Adjust Kit .	

EQUIPMENT

Megger (Insulation resistance meter)	Spark plug
Spark plug cleaner	
Torque wrench	

STARTING

FP1AZ–02

SST (Special Service Tools)

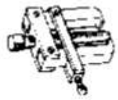	09286–46011	Injection Pump Spline Shaft Puller	Armature front bearing
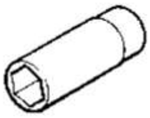	09810–38140	Starter Magnet Switch Nut Wrench 14	
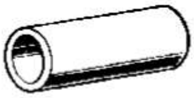	09820–00030	Alternator Rear Bearing Replacer	Armature bearing

RECOMMENDED TOOLS

	09082-00040	TOYOTA Electrical Tester.	

EQUIPMENT

Dial indicator	Commutator
Magnetic finger	Steel ball
Pull scale	Brush spring
Sandpaper	Commutator
Torque wrench	
V–block	Commutator
Vernier calipers	Commutator, Brush

CHARGING

SST (Special Service Tools)

PP1B2–02

	09285–76010	Injection Pump Camshaft Bearing Cone Replacer	Rotor rear bearing cover
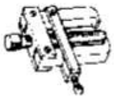	09286–46011	Injection Pump Spline Shaft Puller	Rectifier end frame
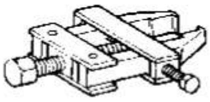	09820–00021	Alternator Rear Bearing Puller	
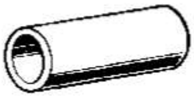	09820–00030	Alternator Rear Bearing Replacer	
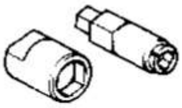	09820–63010	Alternator Pulley Set Nut Wrench Set	
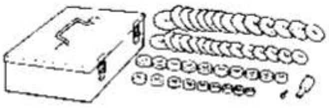	09950–60010	Replacer Set	Rotor front bearing
	(09951–00260)	Replacer 26	
	(09951–00500)	Replacer 50	
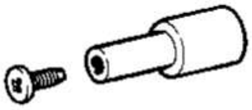	(09952–06010)	Adapter	

RECOMMENDED TOOLS

	09082–00040	TOYOTA Electrical Tester.	

PP1B4–02

EQUIPMENT

Ammeter(A)	
Torque wrench	
Vernier calipers	Rotor (Slip ring)

STANDARD BOLT

HOW TO DETERMINE BOLT STRENGTH

SS00F–08

	Mark	Class
Hexagon head bolt	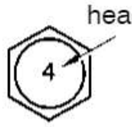 Bolt head No. 4– 5– 6– 7– 8– 9– 10– 11–	4T 5T 6T 7T 8T 9T 10T 11T
	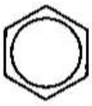 No mark	4T
Hexagon flange bolt w/ washer hexagon bolt	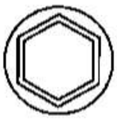 No mark	4T
Hexagon head bolt	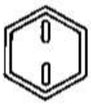 2 Protruding lines	5T
Hexagon flange bolt w/ washer hexagon bolt	 2 Protruding lines	6T
Hexagon head bolt	 3 Protruding lines	7T
Hexagon head bolt	 4 Protruding lines	8T

	Mark	Class
Hexagon flange bolt w/ washer hexagon bolt	 4 Protruding lines	9T
Hexagon flange bolt w/ washer hexagon bolt	 5 Protruding lines	10T
Hexagon flange bolt w/ washer hexagon bolt	 6 Protruding lines	11T
Stud bolt	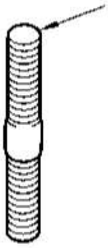 No mark	4T
	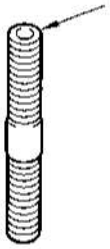 Grooved	6T
Welded bolt	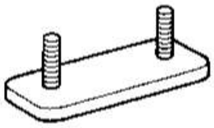	4T

V06821

SS00G–06

SPECIFIED TORQUE FOR STANDARD BOLTS

Class	Diameter mm	Pitch mm	Specified torque					
			Hexagon head bolt			Hexagon flange bolt		
			N·m	kgf·cm	ft·lbf	N·m	kgf·cm	ft·lbf
4T	6	1	5	55	48 in.·lbf	6	60	52 in.·lbf
	8	1.25	12.5	130	9	14	145	10
	10	1.25	26	260	19	29	290	21
	12	1.25	47	480	35	53	540	39
	14	1.5	74	760	55	84	850	61
	16	1.5	115	1,150	83	–	–	–
5T	6	1	6.5	65	56 in.·lbf	7.5	75	65 in.·lbf
	8	1.25	15.5	160	12	17.5	175	13
	10	1.25	32	330	24	36	360	26
	12	1.25	59	600	43	65	670	48
	14	1.5	91	930	67	100	1,050	76
	16	1.5	140	1,400	101	–	–	–
6T	6	1	8	80	69 in.·lbf	9	90	78 in.·lbf
	8	1.25	19	195	14	21	210	15
	10	1.25	39	400	29	44	440	32
	12	1.25	71	730	53	80	810	59
	14	1.5	110	1,100	80	125	1,250	90
	16	1.5	170	1,750	127	–	–	–
7T	6	1	10.5	110	8	12	120	9
	8	1.25	25	260	19	28	290	21
	10	1.25	52	530	38	58	590	43
	12	1.25	95	970	70	105	1,050	76
	14	1.5	145	1,500	108	165	1,700	123
	16	1.5	230	2,300	166	–	–	–
8T	8	1.25	29	300	22	33	330	24
	10	1.25	61	620	45	68	690	50
	12	1.25	110	1,100	80	120	1,250	90
9T	8	1.25	34	340	25	37	380	27
	10	1.25	70	710	51	78	790	57
	12	1.25	125	1,300	94	140	1,450	105
10T	8	1.25	38	390	28	42	430	31
	10	1.25	78	800	58	88	890	64
	12	1.25	140	1,450	105	155	1,600	116
11T	8	1.25	42	430	31	47	480	35
	10	1.25	87	890	64	97	990	72
	12	1.25	155	1,600	116	175	1,800	130

V00079

ENGINE MECHANICAL

SERVICE DATA

SS0OQ–04

Compression pressure	at 250 rpm STD	1,324 kPa (13.5 kgf/cm^2, 192 psi) or more
	Minimum	981 kPa (10.0 kgf/cm^2, 142 psi)
	Difference of pressure between each cylinder	98 kPa (1.0 kgf/cm^2, 14 psi) or less
Valve clearance	at cold Intake	0.15 – 0.25 mm (0.006 – 0.010 in.)
	Exhaust	0.25 – 0.35 mm (0.010 – 0.014 in.)
	Valve clearance adjusting shim No.00	2.000 mm (0.0787 in.)
	No.02	2.020 mm (0.0795 in.)
	No.04	2.040 mm (0.0803 in.)
	No.06	2.060 mm (0.0811 in.)
	No.08	2.080 mm (0.0819 in.)
	No.10	2.100 mm (0.0827 in.)
	No.12	2.120 mm (0.0835 in.)
	No.14	2.140 mm (0.0843 in.)
	No.16	2.160 mm (0.0850 in.)
	No.18	2.180 mm (0.0858 in.)
	No.20	2.200 mm (0.0866 in.)
	No.22	2.220 mm (0.0874 in.)
	No.24	2.240 mm (0.0882 in.)
	No.26	2.260 mm (0.0890 in.)
	No.28	2.280 mm (0.0898 in.)
	No.30	2.300 mm (0.0906 in.)
	No.32	2.320 mm (0.0913 in.)
	No.34	2.340 mm (0.0921 in.)
	No.36	2.360 mm (0.0929 in.)
	No.38	2.380 mm (0.0937 in.)
	No.40	2.400 mm (0.0945 in.)
	No.42	2.420 mm (0.0953 in.)
	No.44	2.440 mm (0.0961 in.)
	No.46	2.460 mm (0.0969 in.)
	No.48	2.480 mm (0.0976 in.)
	No.50	2.500 mm (0.0984 in.)
	No.52	2.520 mm (0.0992 in.)
	No.54	2.540 mm (0.1000 in)
	No.56	2.560 mm (0.1008 in.)
	No58	2.580 mm (0.1016 in.)
	No.60	2.600 mm (0.1024 in.)
	No.62	2.620 mm (0.1031 in.)
	No.64	2.640 mm (0.1039 in.)
	No.66	2.660 mm (0.1047 in.)
	No.68	2.680 mm (0.1055 in.)
	No.70	2.700 mm (0.1063 in.)
	No.72	2.720 mm (0.1071 in.)
	No.74	2.740 mm (0.1079 in.)
	No.76	2.760 mm (0.1087 in.)
	No.78	2.780 mm (0.1094 in.)
	No.80	2.800 mm (0.1102 in.)
Ignition timing	w/ Terminals TC and E1 connected of check connector	5 –15° BTDC @ idle
Idle speed	–	700 ± 50 rpm
Timing belt tensioner	Protrusion from housing end	10.5 – 11.5 mm (0.413 – 0.453 in.)

Cylinder head	Warpage	Maximum	0.10 mm (0.039 in.)
	Valve seat		
	Refacing angle		30°, 45°, 60°
	Contacting angle		45°
	Contacting width		1.0 – 1.4 mm (0.039 – 0.055 in.)
	Valve guide bushing bore diameter	STD	10.285 – 10.306 mm (0.4049 – 0.4057 in.)
		O/S 0.05	10.335 – 10.356 mm (0.4069 – 0.4077 in.)
	Cylinder head bolt thread inside diameter	STD	9.810 – 9.960 mm (0.3862 – 0.3921 in.)
		Minimum	9.70 mm (0.3819 in.)
Valve guide bushing	Inside diameter		5.510 – 5.530 mm (0.2169 – 0.2374 in.)
	Outside diameter (for repair part)	STD	10.333 – 10.344 mm (0.4068 – 0.4072 in.)
		O/S 0.05	10.383 – 10.394 mm (0.4088 – 0.4092 in.)
Valve	Valve overall length	STD Intake	95.05 mm (3.7421 in.)
		Exhaust	95.10 mm (3.7441 in.)
		Minimum Intake	94.55 mm (3.7224 in.)
		Exhaust	94.60 mm (3.7244 in.)
	Valve face angle		44.5°
	Stem diameter	Intake	5.470 – 5.485 mm (0.2154 – 0.2159 in.)
		Exhaust	5.465 – 5.480 mm (0.2152 – 0.2157 in.)
	Stem oil clearance	STD Intake	0.025 – 0.060 mm (0.0010 – 0.0024 in.)
		Exhaust	0.030 – 0.065 mm (0.0012 – 0.0026 in.)
		Maximum Intake	0.08 mm (0.0031 in.)
		Exhaust	0.10 mm (0.0039 in.)
	Margin thickness	STD Intake	1.25 mm (0.049 in.)
		Exhaust	1.4 mm (0.055 in.)
		Minimum	0.5 mm (0.020 in.)
Valve spring	Deviation	Maximum	2.0 mm (0.079 in.)
	Free length		54.1 mm (2.130 in.)
	Installed tension at 35.0 mm (1.378 in.)		204 – 226 N (20.8 – 23.0 kgf·cm, 45.9 – 50.7 lbf)
Valve lifter	Lifter diameter		30.966 – 30.976 mm (1.2191 – 2.2195 in.)
	Lifter bore diameter		31.000 – 31.016 mm (1.2205 – 1.2211 in.)
	Oil clearance	STD	0.024 – 0.050 mm (0.0009 – 0.0020 in.)
		Maximum	0.07 mm (0.0028 in.)
Camshaft	Thrust clearance	STD Intake	0.040 – 0.090 mm (0.0016 – 0.0035 in.)
		Exhaust	0.040 – 0.085 mm (0.0016 – 0.0033 in.)
		Maximum	0.12 mm (0.0047 in.)
	Journal oil clearance	STD	0.030 – 0.067 mm (0.0012 – 0.0026 in.)
		Maximum	0.10 mm (0.0039 in.)
	Journal diameter		26.954 – 26.970 mm (1.0612 – 1.0618 in.)
	Circle runout		0.08 mm (0.0031 in.)
	Cam lobe height	STD Intake	41.94 – 42.04 mm (1.6512 – 1.6551 in.)
		Exhaust	41.96 – 42.06 mm (1.6520 – 1.6559 in.)
		Minimum Intake	41.79 mm (1.6453 in.)
		Exhaust	41.81 mm (1/6461 in.)
	Camshaft gear backlash	STD	0.020 – 0.200 mm (0.0008 – 0.0079 in.)
		Maximum	0.30 mm (0.0188 in.)
	Camshaft gear spring end free distance		18.2 – 18.8 mm (0.712 – 0.740 in.)
Manifold	Warpage	Maximum Intake	0.15 mm (0.0059 in.)
		Exhaust	0.50 mm (0.0197 in.)

Cylinder block	Cylinder head surface warpage	Maximum	0.07 mm (0.0028 in.)
	Cylinder bore diameter	STD STD Mark 1	94.002 – 94.010 mm (3.7009 – 3.7012 in.)
		Mark 2	94.010 – 94.023 mm (3.7012 – 3.7017 in.)
		Mark 3	94.023 – 94.031 mm (3.7017 – 3.7020 in.)
		Maximum STD	94.231 mm (3.7099 in.)
		O/S 050	94.731 mm (3.7296 in.)
	Main bearing cap bolt tension portion diameter	STD	10.760 – 10.970 mm (0.4236 – 0.4319 in.)
		Minimum	10.40 mm (0.4094 in.)
Piston and piston ring	Piston diameter	STD Mark 1	93.902 – 93.912 mm (3.6969 – 3.6973 in.)
		Mark 2	93.912 – 93.920 mm (3.6973 – 3.6976 in.)
		Mark 3	93.920 – 93.930 mm (3.6976 – 3.6980 in.)
		O/S 0.50	94.402 – 94.430 mm (3.7166 – 3.7177 in.)
	Piston oil clearance	STD	0.090 – 0.111 mm (0.0035 – 0.0044 in.)
		Maximum	0.13 mm (0.0051 in.)
	Piston ring groove clearance	No.1	0.030 – 0.080 mm (0.0012 – 0.0031 in.)
		No.2	0.030 – 0.070 mm (0.0012 – 0.0028 in.)
	Piston ring end gap	STD No.1	0.300 – 0.500 mm (0.0118 – 0.0197 in.)
		No.2	0.400 – 0.650 mm (0.0157 – 0.0256 in.)
		Oil	0.130 – 0.480 mm (0.0051 – 0.0189 in.)
		Maximum No.1	1.10 mm (0.0433 in.)
		No.2	1.20 mm (0.0472 in.)
		Oil	1.15 mm (0.0453 in.)
Connecting rod	Thrust clearance	STD	0.160 – 0.290 mm (0.0063 – 0.0138 in.)
		Maximum	0.35 mm (0.0138 in.)
	Connecting rod thickness		22.880 – 22.920 mm (0.9008 – 0.9024 in.)
	Connecting rod oil clearance	STD	0.027 – 0.053 mm (0.0011 – 0.0021 in.)
		Maximum	0.065 mm (0.0026 in.)
	Connecting rod bearing center wall thickness (Reference)	Mark 2	1.484 – 1.487 mm (0.0584 – 0.0585 in.)
		Mark 3	1.487 – 1.490 mm (0.0585 – 0.0587 in.)
		Mark 4	1.490 – 1.493 mm (0.0587 – 0.0588 in.)
		Mark 5	1.493 – 1.496 mm (0.0588 – 0.0589 in.)
		Mark 6	1.496 – 1.499 mm (0.0589 – 0.0590 in.)
		Mark 7	1.499 – 1.502 mm (0.0590 – 0.0591 in.)
	Rod bend	Maximum per 100 mm (3.94 in.)	0.05 mm (0.0020 in.)
	Rod twist	Maximum per 100 mm (3.94 in.)	0.15 mm (0.0059 in.)
	Bushing inside diameter		22.005 – 22.014 mm (0.8663 – 0.8667 in.)
	Piston pin diameter		21.997 – 22.006 mm (0.8660 – 0.8664 in.)
	Bushing oil clearance	STD	0.005 – 0.011 mm (0.0002 – 0.0004 in)
		Maximum	0.05 mm (0.0020 in.)
	Connecting rod bolt tension portion diameter	STD	7.200 – 7.300 mm (0.2835 – 0.2874 in.)
		Minimum	7.00 mm (0.2756 in.)
Crankshaft	Thrust clearance	STD	0.020 – 0.220 mm (0.0008 – 0.0087 in.)
		Maximum	0.30 mm (0.0118 in.)
	Thrust washer thickness		2.440 – 2.490 mm (0.0961 – 0.0980 in.)
	Main journal bore diameter on cylinder block (with main bearing)		66.986 – 67.000 mm (2.6372 – 2.6378 in.)
	Main journal oil clearance	STD	0.040 – 0.058 mm (0.0016 – 0.0023 in.)
		Maximum	0.070 mm (0.0028 in.)
	Main journal diameter		66.988 – 67.000 mm (2.6373 – 2.6378 in.)

Crankshaft (cont'd)	Main bearing center wall thickness (Reference)	
	No.1 and No.5 Mark 3	2.481 – 2.484 mm (0.0977 – 0.0978 in.)
	Mark 4	2.484 – 2.487 mm (0.0978 – 0.0979 in.)
	Mark 5	2.487 – 2.490 mm (0.0979 – 0.0980 in.)
	Mark 6	2.490 – 2.493 mm (0.0980 – 0.0981 in.)
	Mark 7	2.493 – 2.496 mm (0.0981 – 0.0983 in.)
	Others Mark 1	2.481 – 2.484 mm (0.0977 – 0.0978 in.)
	Mark 2	2.484 – 2.487 mm (0.0978 – 0.0979 in.)
	Mark 3	2.487 – 2.490 mm (0.0979 – 0.0980 in.)
	Mark 4	2.490 – 2.493 mm (0.0980 – 0.0981 in.)
	Mark 5	2.493 – 2.496 mm (0.0981 – 0.0983 in.)
	Crank pin diameter	51.982 – 52.000 mm (2.0465 – 2.0472 in.)
	Circle runout Maximum	0.08 mm (0.0031 in.)
	Main journal taper and out–of–round Maximum	0.02 mm (0.0008 in.)
	Crank pin taper and out–of–round Maximum	0.02 mm (0.0008 in.)

SS00R–04

TORQUE SPECIFICATION

Part tightened		N·m	kgf·cm	ft·lbf
Alternator x Alternator bracket		39	400	29
No.1 idler pulley, No.2 idler pulley x Cylinder Block		34.5	350	25
Camshaft timing pulley x Camshaft timing tube		108	1,100	80
Drive belt tensioner x Cylinder block		16	160	12
Timing belt tensioner x Oil pump		26	270	19
Crankshaft pulley x Crankshaft		245	2,500	181
Fan bracket x Cylinder block	12 mm head	16	160	12
	14 mm head	32	330	24
No.2 timing belt cover x Cylinder block		16	160	12
No.3 timing belt cover x Cylinder block, Cylinder head		7.5	80	66 in.·lbf
Drive belt idler pulley x Fan bracket		37	380	27
Fluid coupling x Fan bracket		21	215	16
Exhaust manifold x Cylinder head		44	450	33
Cylinder head x Cylinder block	1st	32	325	24
	2nd	Turn 90°	Turn 90°	Turn 90°
	3rd	Turn 90°	Turn 90°	Turn 90°
Camshaft bearing cap x Cylinder head	Bolt C	7.5	80	66 in.·lbf
	Others	16	160	12
Cylinder head cover x Cylinder head		6.0	60	53 in.·lbf
Engine hanger x Cylinder head		37	380	27
Front water bypass joint, Rear water bypass joint x Cylinder head		18	185	13
Intake manifold x Cylinder head		18	185	13
V–bank cover bracket x Intake manifold		7.5	80	66 in.·lbf
Timing belt rear plate x Cylinder head		7.5	80	66 in.·lbf
Drive plate x Crankshaft	1st	49	500	36
	2nd	Turn 90°	Turn 90°	Turn 90°
Flywheel x Crankshaft	1st	29.5	300	22
	2nd	Turn 90°	Turn 90°	Turn 90°
Main bearing cap x Cylinder block	1st	27	275	20
	2nd	Turn 90°	Turn 90°	Turn 90°
Connecting rod cap x Connecting rod	1st	24.5	250	18
	2nd	Turn 90°	Turn 90°	Turn 90°
Rear oil seal retainer x Cylinder block		8.0	80	71 in.·lbf
Engine coolant drain union x Cylinder block		49	500	36
Engine mounting bracket x Cylinder block		36	370	27
Water bypass pipe x Cylinder block		18	185	13

EMISSION CONTROL

SS0X1–01

TORQUE SPECIFICATION

Part tightened	N·m	kgf·cm	ft·lbf
Front exhaust pipe x Exhaust manifold	62	632	46
Front exhaust pipe x Center pipe	40	408	30
Oxygen sensor x Front exhaust pipe	20	200	14

ELECTRONIC FUEL INJECTION

SERVICE DATA

SS0CB–06

Fuel pressure regulator	Fuel pressure at no vacuum	265 – 304 kPa (2.7 – 3.1 kgf/cm^2, 38 – 44 psi)
Fuel pump	Resistance at 20°C (68°F)	0.2 – 3.0 Ω
Sub fuel pump	Resistance at 20°C (68°F)	0.2 – 3.0 Ω
Injector	Resistance at 20°C (68°F)	13.4 – 14.2 Ω
	Injection volume	56 – 69 cm^3 (3.4 – 4.2 cu in.) per 15 seconds
	Difference between each cylinder	13 cm^3 (0.8 cu in.) or less
	Fuel leakage	1 drop or less per 12 minutes
Air flow meter	Resistance (THA – E2) at –20°C (–4°F)	12.5 – 16.9 kΩ
	at 20°C (68°F)	2.19 – 2.67 kΩ
	at 60°C (140°F)	0.50 – 0.68 kΩ
Throttle body	Throttle body fully closed angle	5.5°
Throttle position sensor	Resistance (VC – E2) at 20°C (68°F)	1.25 – 2.35 kΩ
Accelerator pedal position sensor	Resistance (VC – E2) at 20°C (68°F)	1.64 – 3.28 kΩ
	Standard throttle valve opening percentage Sensor lever full–open position	60 % or more
Throttle control motor	Motor resistance at 20°C (68°F)	0.3 – 100 Ω
	Clutch resistance at 20°C (68°F)	4.2 – 5.2 Ω
Fuel tank solenoid return valve	Resistance at 20°C (68°F)	33 – 39 Ω
Fuel pump resistor	Resistance at 20°C (68°F)	0.71 – 0.75 Ω
VSV for EVAP	Resistance at 20°C (68°F)	30 – 34 Ω
Water temperature sensor	Resistance at –20°C (–4°F)	10 – 20 kΩ
	0°C (32°F)	4 – 7 kΩ
	20°C (68°F)	2 – 3 kΩ
	40°C (104°F)	0.9 – 1.3 kΩ
	60°C (140°F)	0.4 – 0.7 kΩ
	80°C (176°F)	0.2 – 0.4 kΩ
Variable resistor	Power source voltage	4.5 – 5.5 V
	Resistance at 20°C (68°F)	4 – 6 kΩ
Oxygen sensor	Resistance at 20°C (68°F)	11 – 16 Ω
Fuel cut rpm	Fuel return rpm	1,000 rpm

SS0CC-06

TORQUE SPECIFICATION

Part tightened		N·m	kgf·cm	ft·lbf
Fuel line				
Union bolt type		39	400	29
Flare nut type	for use with SST	34	345	25
		38	380	28
No.1 rear seat x Body		41	420	30
Center exhaust pipe x Tailpipe		35	357	26
Sub fuel tank band x Body		40	400	30
Drain plug x Sub fuel tank		6.5	65	58 in.·lbf
Fuel pressure pulsation damper x Delivery pipe	for use with SST	33	340	24
		39	400	29
Fuel pressure regulator x RH delivery pipe		7.5	80	66 in.·lbf
Fuel tank vent tube set plate x Fuel tank		3.5	35	31 in.·lbf
Sub fuel pump and bracket assembly x Sub fuel tank		3.5	35	31 in.·lbf
Front fuel pipe x Delivery pipe		39	400	29
Front fuel pipe x Lower intake manifold		7.5	80	66 in.·lbf
Fuel return pipe x LH delivery pipe		7.5	80	66 in.·lbf
Delivery pipe x Lower intake manifold		18	185	13
Throttle position sensor x Throttle body		2.0	20	18 in.·lbf
Water bypass pipe x Throttle body		5.4	55	48 in.·lbf
Throttle control motor x Throttle body		3.4	35	30 in.·lbf
Throttle control motor cover x Throttle body		3.4	35	30 in.·lbf
Accelerator pedal position sensor x Throttle body		5.4	55	48 in.·lbf
Throttle body x Upper intake manifold, Lower intake manifold		18	185	13
No.2 rear seat x Body		41	420	30
No.2 rear seat outer belt x Body		43	440	32
Upper intake manifold, Accelerator cable bracket x Lower intake manifold		18	185	13
Water temperature sensor x Front water bypass joint		19.6	200	14
Knock sensor x Cylinder block		45	450	33
Oxygen sensor x Exhaust manifold		44	450	32
Oxygen sensor x Front exhaust pipe		20	200	14

COOLING

SERVICE DATA

Thermostat	Valve opening temperature Valve lift	 at 95°C (203°F)	80 – 84°C (176 – 183°F) 10 mm (0.39 in.) or more
Radiator cap	Relief valve opening temperature	STD Minimum	93 – 123 kPa (0.95 – 1.25 kgf/cm^2, 10.7 – 14.9 psi) 78 kPa (0.6 kgf/cm^2, 8.5 psi)

TORQUE SPECIFICATION

Part tightened		N·m	kgf·cm	ft·lbf
Drain plug x Union on cylinder block		12.7	130	9
Water pump x Cylinder block	Bolt	21	215	15
	Stud bolt and nut	18	185	13
Water inlet housing x Water pump		18	185	13
Water inlet x Water inlet housing		19	195	14

LUBRICATION

SERVICE DATA

SS0WM–01

Oil pressure		at idle speed	29 kPa (0.3 kgf/cm^2, 4.3 psi) or more
		at 3,000 rpm	294 – 588 kPa (3.0 – 6.0 kgf/cm^2, 43 – 85 psi)
Oil pump	Tip clearance	STD	0.110 – 0.240 mm (0.0043 – 0.0094 in.)
		Maximum	0.35 mm (0.0138 in.)
	Side clearance	STD	0.030 – 0.090 mm (0.0012 – 0.0035 in.)
		Maximum	0.15 mm (0.0059 in.)
	Body clearance	STD	0.100 – 0.175 mm (0.0039 – 0.0069 in.)
		Maximum	0.30 mm (0.0118 in.)

TORQUE SPECIFICATION

Part tightened		N·m	kgf·cm	ft·lbf
No.2 oil pan x Drain plug		39	400	29
Oil pump body cover x Oil pump body		10	105	8
Oil pump x Cylinder block	14 mm head	30.5	310	22
	12 mm and 6 mm hexagon head bolt	15.5	160	11
Oil strainer x Cylinder block, Oil pump		7.5	80	66 in.·lbf
No.1 oil pan x Oil pump, Oil seal retainer		7.5	80	66 in.·lbf
No.1 oil pan x Cylinder block	10 mm head	7.5	80	66 in.·lbf
	12 mm head	28	290	21
Oil pan baffle plate x No.1 oil pan		7.5	80	66 in.·lbf
No.2 oil pan x No.1 oil pan		7.5	80	66 in.·lbf
Oil filter bracket x OIl pump		18	185	13
Oil cooler x Oil filter bracket	Union bolt	68.6	700	51
Oil dipstick guide x Cylinder head		15	155	11

IGNITION

SERVICE DATA

SS0X2–01

Firing order	–		1 – 8 – 4 – 3 – 6 – 5 – 7 – 2
Spark plug (Europe and Australia)	Recommended spark plug	DENSO made	SK20R11
		NGK made	IFR6A11
	Correct electrode gap for new spark plug		1.1 mm (0.043 in.)
	Maximum electrode gap for used spark plug		1.2 mm (0.047 in.)
Spark plug (Others)	Recommended spark plug	DENSO made	K20R–U
		NGK made	BKR6EYA
	Electrode gap		0.8 mm (0.031 in.)
Camshaft position sensor	Resistance	Cold	835 – 1,400 Ω
		Hot	1,060 – 1,645 Ω
Crankshaft position sensor	Resistance	Cold	1,630 – 2,740 Ω
		Hot	2,065 – 3,225 Ω

SS0X3–01

TORQUE SPECIFICATION

Part tightened	N·m	kgf·cm	ft·lbf
Spark plug x Cylinder head	17.5	180	13
Ignition coil (with igniter) x Cylinder head cover	7.5	80	66 in.·lbf
Camshaft position sensor x LH cylinder head	7.5	80	66 in.·lbf
Crankshaft position sensor x Oil pump	6.5	65	58 in.·lbf

STARTING

SS0SY–02

SERVICE DATA

Starter (1.4 kW type)	Rated voltage and output power		12V 1.4 kW
	No–load characteristics	Current	90 A or less at 11.5 V
		rpm	3,000 rpm or less
	Brush length	STD	15.5 mm (0.610 in.)
		Minimum	10.0 mm (0.394 in.)
	Spring installed load	STD	17.6 – 23.5 N (1.8 – 2.4 kgf, 4.0 – 5.3 lbf)
		Minimum	11.8 N (1.2 kgf, 2.7 lbf)
	Commutator		
	Diameter	STD	30.0 mm (1.181 in.)
		Minimum	29.0 mm (1.142 in.)
	Undercut depth	STD	0.6 mm (0.024 in.)
		Minimum	0.2 mm (0.008 in.)
	Circle runout	Maximum	0.05 mm (0.0020 in.)
	Magnetic switch		
	Contact plate for wear	Maximum	0.9 mm (0.035 in.)
Starter (2.0 kW type)	Rated voltage and output power		12V 2.0 kW
	No–load characteristics	Current	100 A or less at 11.5 V
		rpm	2,500 rpm or less
	Brush length	STD	15.0 mm (0.591 in.)
		Minimum	9.0 mm (0.354 in.)
	Spring installed load	STD	21.5 – 27.5 N (2.2 – 2.8 kgf, 4.8 – 6.2 lbf)
		Minimum	12.7 N (1.3 kgf, 2.9 lbf)
	Commutator		
	Diameter	STD	35.0 mm (1.378 in.)
		Minimum	34.0 mm (1.339 in.)
	Undercut depth	STD	0.7 mm (0.028 in.)
		Minimum	0.2 mm (0.008 in.)
	Circle runout	Maximum	0.05 mm (0.0020 in.)
	Field frame		
	Shunt coil resistance	at 20°C (68°F)	1.5 – 1.9 Ω
	Magnetic switch		
	Contact plate for wear	Maximum	0.9 mm (0.035 in.)

SS0SZ–02

TORQUE SPECIFICATION

Part tightened		N·m	kgf·cm	ft·lbf
Terminal 30 nut, Terminal C nut x Terminal bolt		17	170	13
End cover x Magnetic switch housing	1.4 kW type	2.5	25	22 in.·lbf
	2.0 kW type	3.6	37	32 in.·lbf
End cover x Brush holder	1.4 kW type	1.5	15	13 in.·lbf
	2.0 kW type	3.8	39	35 in.·lbf
Starter hosing x Magnetic switch	1.4 kW type	5.9	60	52 in.·lbf
	2.0 kW type	9.3	95	82 in.·lbf
End cover with field frame x Magnetic switch	1.4 kW type	5.9	60	52 in.·lbf
	2.0 kW type	9.3	95	82 in.·lbf
Lead wire of field coil x Terminal C		5.9	60	52 in.·lbf
Wire clamp, Starter wire x Starter		9.81	100	87 in.·lbf
Starter x Cylinder block		39	400	29

CHARGING

SS0T0–02

SERVICE DATA

Battery	Specific gravity	at 20°C (68°F)	1.25 – 1.29
	Voltage	at 20°C (68°F)	12.5 – 12.9 V
Alternator	Rated output		12 V 80 A, 12V 100A
	Rotor coil resistance	at 20°C (68°F)	2.1 – 2.5 Ω
	Slip ring diameter	STD	14.2 – 14.4 mm (0.559 – 0.567 in.)
		Minimum	12.8 mm (0.504 in.)
	Brush exposed length	STD	10.5 mm (0.413 in.)
		Minimum	1.5 mm (0.059 in.)
IC regulator	Regulating voltage		13.2 – 14.8 V

TORQUE SPECIFICATION

Part tightened		N·m	kgf·cm	ft·lbf
Bearing cover x Drive end frame		3.0	31	27 in.·lbf
Rectifier end frame without wire clip x Drive end frame		4.5	46	40 in.·lbf
Rectifier end frame with cord clip x Drive end frame	80 A	5.4	55	48 in.·lbf
Alternator pulley x Rotor		110.5	1,128	81
Rectifier holder x Lead wire on rectifier end frame		2.94	30	26 in.·lbf
IC regulator x Rectifier end frame		2.0	20	18 in.·lbf
IC regulator x Rectifier holder		2.0	20	18 in.·lbf
Brush holder x Rectifier holder		2.0	20	18 in.·lbf
Brush holder x IC regulator		2.0	20	18 in.·lbf
Rear end cover x Rectifier holder		4.4	45	39 in.·lbf
Plate terminal x Rectifier holder		3.8	39	34 in.·lbf
Rear end cover x Rectifier holder		4.4	45	39 in.·lbf
Terminal insulator x Rectifier holder		4.1	42	36 in.·lbf
Alternator x Cylinder block		39	400	29

ENGINE

HOW TO PROCEED WITH TROUBLESHOOTING

DI3OP–01

When using hand–held tester, Troubleshoot in accordance with the procedure on the following page.

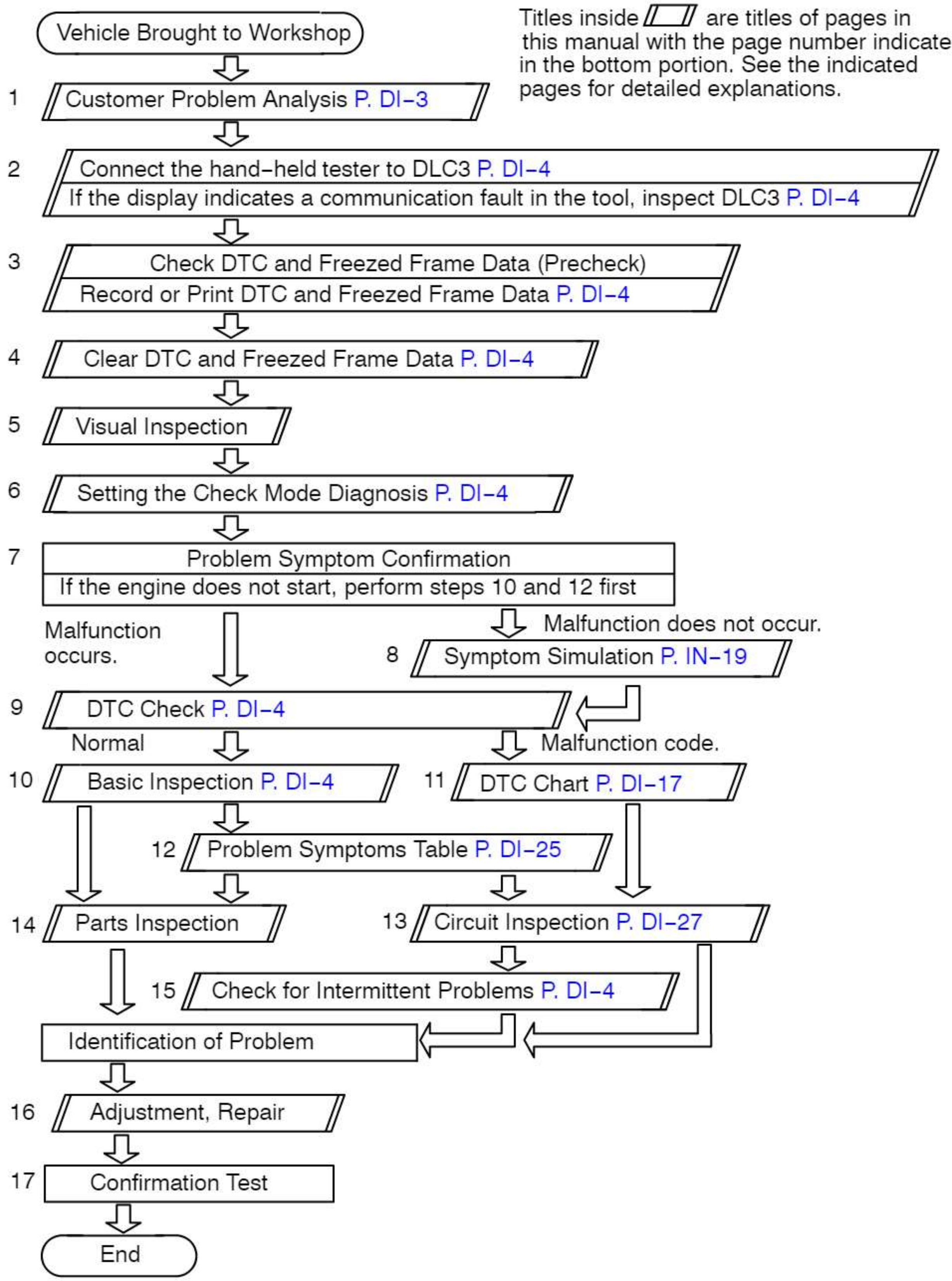

Titles inside ▱ are titles of pages in this manual with the page number indicated in the bottom portion. See the indicated pages for detailed explanations.

When not using hand–held tester, Troubleshoot in accordance with the procedure on the following page.

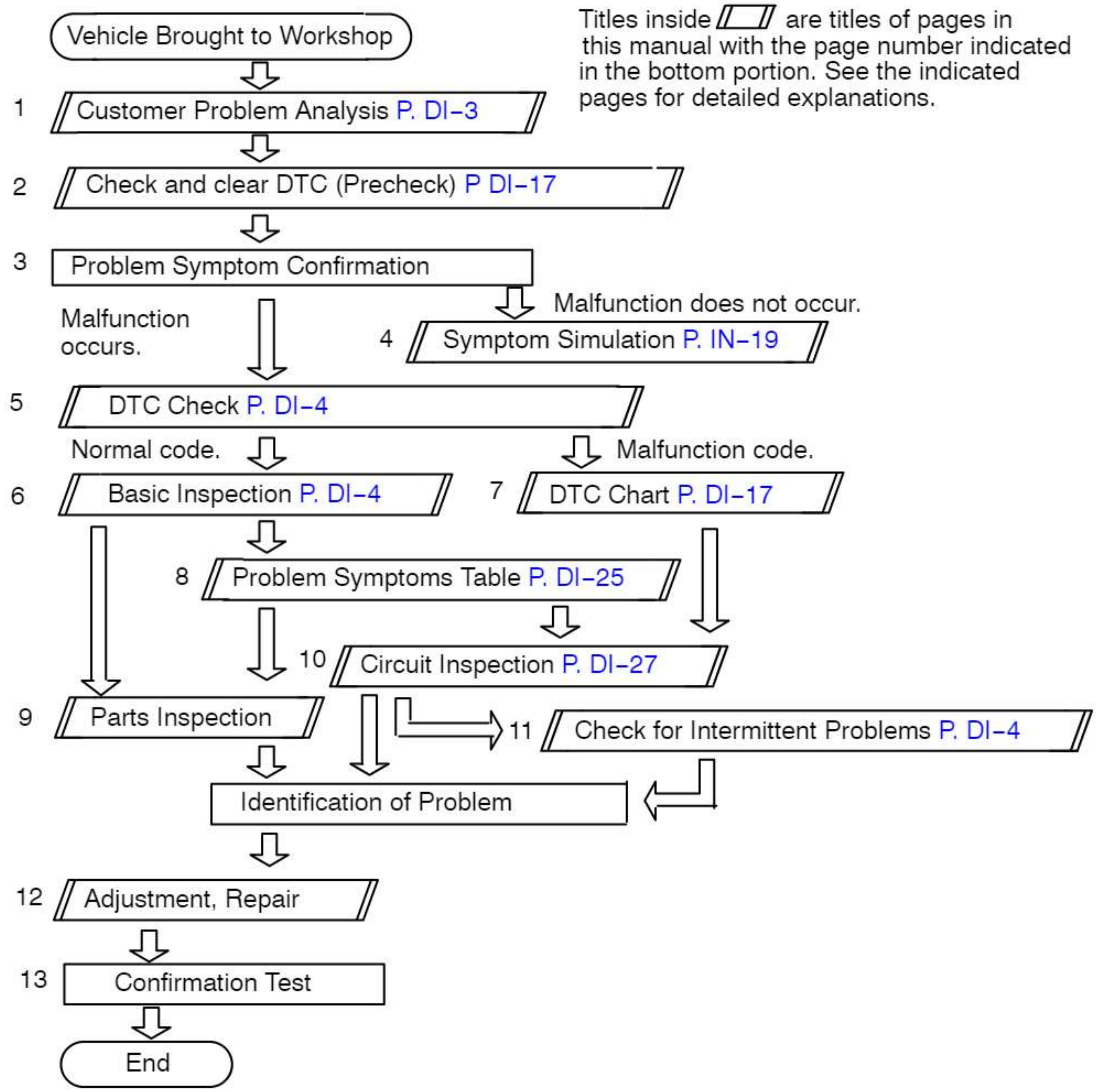

DI3OQ–01

CUSTOMER PROBLEM ANALYSIS CHECK

ENGINE CONTROL SYSTEM Check Sheet

Inspector's Name

Customer's Name		Model and Model Year	
Driver's Name		Frame No.	
Date Vehicle Brought in		Engine Model	
License No.		Odometer Reading	km miles

Problem Symptoms	☐ Engine does not Start	☐ Engine does not crank ☐ No initial combustion ☐ No complete combustion
	☐ Difficult to Start	☐ Engine cranks slowly ☐ Other
	☐ Poor Idling	☐ Incorrect first idle ☐ Idling rpm is abnormal ☐ High (rpm) ☐ Low (rpm) ☐ Rough idling ☐ Other
	☐ Poor Driveability	☐ Hesitation ☐ Back fire ☐ Muffler explosion (after–fire) ☐ Surging ☐ Knocking ☐ Other
	☐ Engine Stall	☐ Soon after starting ☐ After accelerator pedal depressed ☐ After accelerator pedal released ☐ During A/C operation ☐ Shifting from N to D ☐ Other
	☐ Others	

Dates Problem Occurred		
Problem Frequency		☐ Constant ☐ Sometimes (times per day/month) ☐ Once only ☐ Other
Condition When Problem Occurs	Weather	☐ Fine ☐ Cloudy ☐ Rainy ☐ Snowy ☐ Various/Other
	Outdoor Temperature	☐ Hot ☐ Warm ☐ Cool ☐ Cold (approx. ____ °F/____ °C)
	Place	☐ Highway ☐ Suburbs ☐ Inner city ☐ Uphill ☐ Downhill ☐ Rough road ☐ Other
	Engine Temp.	☐ Cold ☐ Warming up ☐ After warming up ☐ Any temp. ☐ Other
	Engine Operation	☐ Starting ☐ Just after starting (min.) ☐ Idling ☐ Racing ☐ Driving ☐ Constant speed ☐ Acceleration ☐ Deceleration ☐ A/C switch ON/OFF ☐ Other

DTC Inspection	Normal Mode (Precheck)	☐ Normal	☐ Malfunction code(s) (code) ☐ Freezed frame data ( )
	Check (test) Mode	☐ Normal	☐ Malfunction code(s) (code) ☐ Freezed frame data ( )

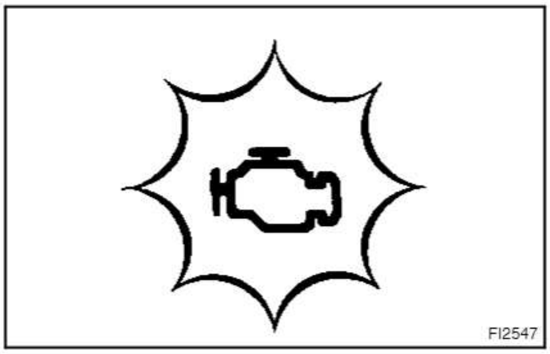

DI3OR–01

PRE–CHECK

1. DIAGNOSIS SYSTEM

(a) Description

- When troubleshooting Multiplex OBD (M–OBD) vehicles, the only difference from the usual troubleshooting procedure is that you connect to the vehicle the hand–held tester, and read off various data output from the vehicle's engine ECU.
- The vehicle's on–board computer lights up check engine warning light (CHK ENG) on the instrument panel when the computer detects a malfunction in the computer itself or in drive system components. In addition to an indication of the CHK ENG lighting up when a malfunction is detected, the applicable Diagnostic Trouble Codes (DTC) recorded in the engine ECU memory (See page DI–17). If the malfunction has been repaired, the CHK ENG goes off automatially but the DTCs remain recorded in the engine ECU memory.

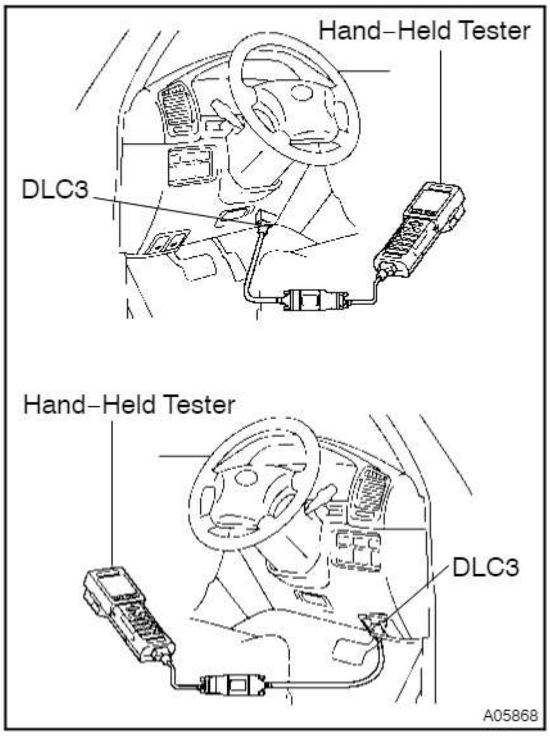

- To check the DTCs, connect the hand–held tester to Data Link Connector 3 (DLC3) on the vehicle or read the diagnostic trouble code which is indicated on the multi information display when TC and CG terminals on the DLC3 are connected. The hand–held tester also enables you to erase the DTCs and check freezed frame data and various forms of engine data. (For operating instructions, see the instruction book.)
- The diagnosis system operates in normal mode during normal vehicle use. It also has a check (test) mode for technicians to simulate malfunction symptoms and troubleshoot. Most DTCs use 2 trip detection logic* to prevent erroneous detection, and ensure thorough malfunction detection. By switching the engine ECU to check (test) mode using hand–held tester when troubleshooting, the technician can cause the CHK ENG light up for a malfunction that is only detected once or momentarily. (Hand–held tester only) (See step 2)
- *2 trip detection logic: When a logic malfunction is first detected, the malfunction is temporarily stored in the engine ECU memory. If the same malfunction is detected again during the second drive test, this second detection causes the CHK ENG light up.
  The 2 trip repeats the same mode a 2nd time. (However, the IG switch must be turned OFF between the 1st trip and 2nd trip.)

- Freeze frame data:
  Freeze frame data records the engine condition when a malfunction , is detected.
  Because freeze frame data records the engine conditions (fuel system, calculator load, Water temperature, fuel trim,engine speed, vehicle speed, etc.) when the malfunction is detected, when troubleshooting it is useful for determining whether the vehicle was running or stopped, the engine warmed up or not, the air–fuel ratio lean or rich, etc. at the time of the malfunction.

(b) Check the DLC3.
The vehicle's engine ECU uses ISO 14230 for communication. The terminal arrangement of DLC3 complies with SAE J1962 and matches the ISO 14230 format.

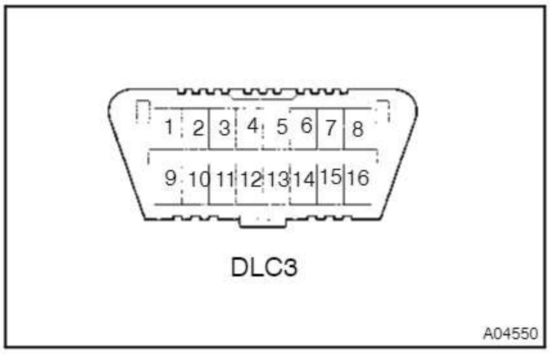

Terminal No.	Connection / Voltage or Resistance	Condition
7	Bus ⊕ Line / Pulse generation	During transmission
4	Chassis Ground ↔ Body Ground / 1 Ω or less	Always
16	Battery Positive ↔ Body Ground / 9 ~ 14 V	Always

HINT:
If your display shows "UNABLE TO CONNECT TO VEHICLE" when you have connected the cable of the hand–held tester to DLC3, turned the ignition switch ON and operated the hand–held tester, there is a problem on the vehicle side or tool side.

- If communication is normal when the tool is connected to another vehicle, inspect DLC3 on the original vehicle.
- If communication is still not possible when the tool is connected to another vehicle, the problem is probably in the tool itself, so consult the Service Department listed in the tool's instruction manual.

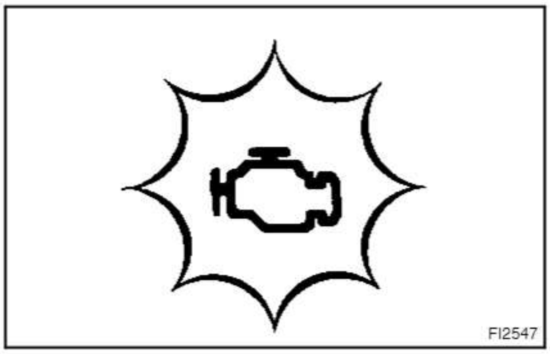

2. INSPECT DIAGNOSIS (Normal Mode)

(a) Check the DTC using hand–held tester.

NOTICE:

Hand–held tester only: When the diagnosis system is switched from normal mode to check (test) mode, it erases all DTCs and freezed frame data recorded in normal mode. So before switching modes, always check the DTCs and freezed frame data, and note them down.

(1) Prepare the hand–held tester.
(2) Connect the hand–held tester to DLC3.
(3) Turn the ignition switch ON and push the hand–held tester main switch ON.
(4) Use the hand–held tester to check the DTCs and freezed frame data, note them down. (For operating instructions, see the hand–held tester instruction book.)
(5) See page DI–17 to confirm the details of the DTCs.

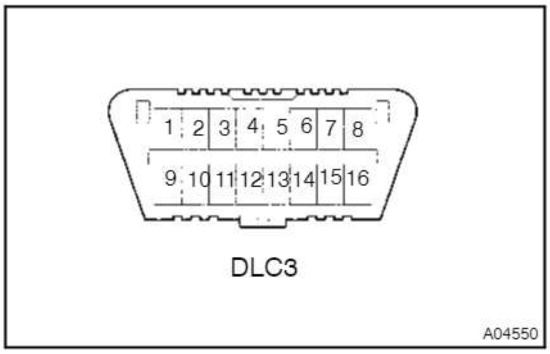

(b) Check the DTC

(1) Turn the ignition switch ON.
(2) Using SST, connect between terminals 13 (TC) and 4 (CG) of DLC3.

SST 09843–18040

(3) Read the DTC on the multiinformation display.

HINT:

- If a DTC is not indicated, check the TC terminal circuit (See page DI–22).
- If a code No.89 is indicated, read the number of blinks of the 2nd STRT indication (only for A/T)/ETCS indicator (only for M/T) to get the DTC for the electric throttle control system (ETCS).

NOTICE:

When simulating symptoms with out a hand–held tester to check the DTCs, use normal mode. For code on the DTC chart subject to ”2 trip detection logic”, turn the ignition switch OFF after the symptom is simulated the first time. Then repeat the simulation process again. When the problem has been simulated twice, the CHK ENG light up and the DTCs are recorded in the engine ECU.

(c) Check the DTC for ETCS

  (1) Turn ignition switch ON.

HINT:

If the 2nd STRT indicator (only for A/T)/ETCS indicator (only for M/T) does not light up, troubleshoot the combination meter (See page DI–21).

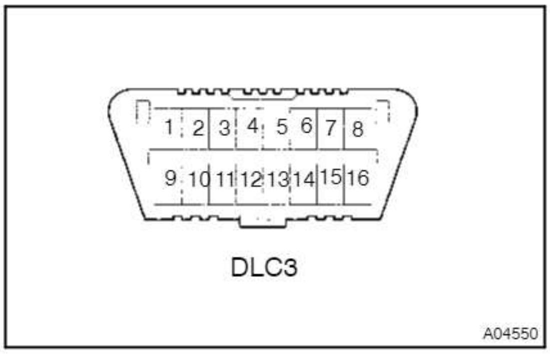

  (2) Using SST, connect between terminals 13 (TC) and 4 (CG) of DLC3.

SST 09843–18040

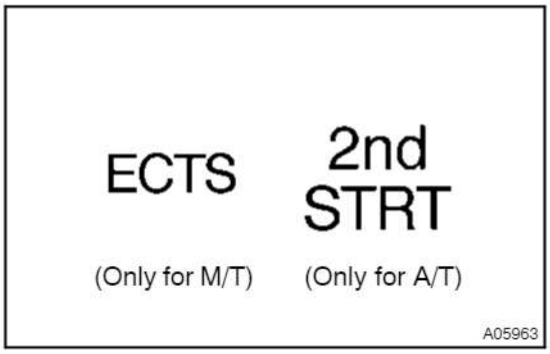

  (3) Read the diagnostic trouble code from 2nd STRT indicator (only for A/T)/ETCS indicator (only for M/T) on the combination meter.

HINT:

If a DTC is not output, check the TC terminal circuit (See page DI–22).

  (4) Check details of the malfunction using the DTC chart on page DI–17.

  (5) After completing the check, disconnect terminals 13 (TC) and 4 (CG) and turn off the display.

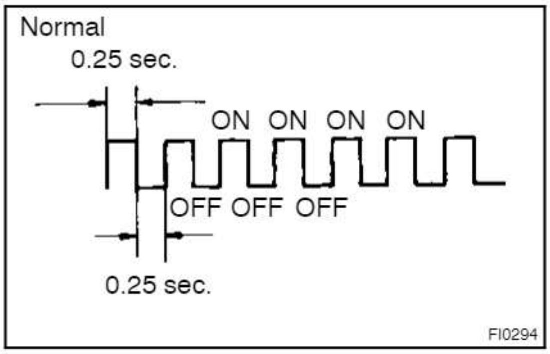

HINT:

In the event of 2 or more malfunction codes, indication will begin from the smaller numbered code and continue in order to the lager.

(d) Clear the DTC.

The DTCs and freezed frame data will be erased by either actions.

  (1) Operating the hand–held tester to erase the codes. (See the hand–held tester's instruction book for operating instructions.)

  (2) Disconnecting the battery terminals of EFI and THROTTLE fuses.

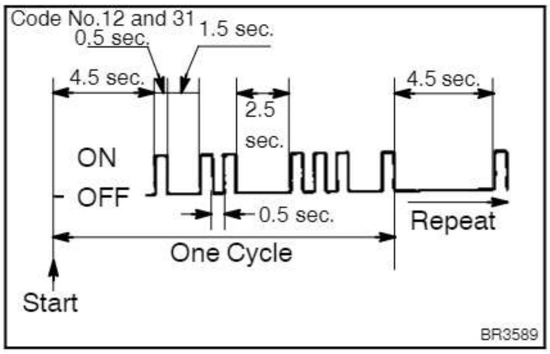

NOTICE:

If the hand–held tester switches the engine ECU from normal mode to check (test) mode or vice–versa, or if the ignition switch is turned from ON to ACC or OFF during check (test) mode, the DTCs and freezed frame data will be erased.

3. INSPECT DIAGNOSIS (Check (Test) Mode)

HINT:

Hand–held tester only:

Compared to the normal mode, the check (test) mode has an increased sensitivity to detect malfunctions.

Furthermore, the same diagnostic items which are detected in the normal mode can also be detected in the check (test) mode.

(a) Check the DTC.

  (1) Initial conditions
    - Battery positive voltage 11V or more.
    - Throttle valve fully closed.
    - Transmission in "P" or "N" position.
    - Air conditioning switched OFF.

  (2) Turn the ignition switch OFF.

  (3) Prepare the hand–held tester.

  (4) Connect the hand–held tester to the DLC3.

  (5) Turn the ignition switch ON and push the hand–held tester main switch ON.

  (6) Switch the hand–held tester normal mode to check (test) mode.

NOTICE:

If the hand–held tester switches the engine ECU from normal mode to check (test) mode or vice–versa, or if the ignition switch is turned from ON to ACC or OFF during check (test) mode, the DTCs and freezed frame data will be erased.

  (7) Start the engine.

  (8) Simulate the conditions of the malfunction described by the customer.

NOTICE:

Leave the ignition switch ON until you have checked the DTCs, etc.

  (9) After simulating the malfunction conditions, use the hand–held tester diagnosis selector to check the DTCs and freezed frame data, etc.

HINT:

Take care not to turn the ignition switch OFF. Turning the ignition switch OFF switches the diagnosis system from check (test) mode to normal mode. so all DTCs, etc. are erased.

  (10) After checking the DTC, inspect the applicable circuit.

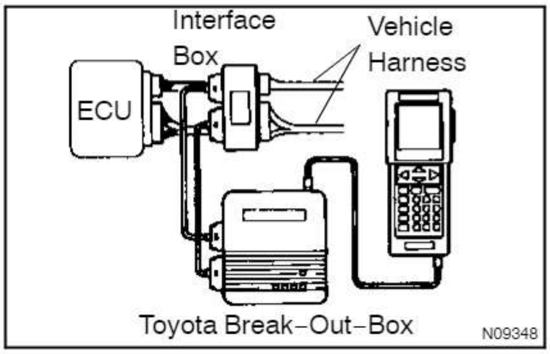

(b) Engine ECU Terminal Values Measurement Using Break–Out–Box and Hand–Held Tester

(1) Hook up the break–out–box and hand–held tester to the vehicle.

(2) Read the engine ECU input/output values by following the prompts on the tester screen.

HINT:

- Hand–held tester has a "Snapshot" function. This records the measured values and is effective in the diagnosis of intermittent problems.
- Please refer to the hand–held tester/break–out–box operator's manual for further details.

4. FAIL–SAFE CHART

If any of the following codes is recorded, the engine ECU enters fail–safe mode.

DTC No.	Fail–Safe Operation	Fail–Safe Deactivation Conditions
P0100/31	Ignition timing fixed at 5° BTDC	Returned to normal condition
P0110/24	Intake air temperature is fixed at 20°C (68°F)	Returned to normal condition
P0115/22	Water temperature is fixed at 80°C (176°F)	Returned to normal condition
P0120/41	VTA is fixed at 0°	The following condition must be repeated at least 2 times consecutively when closed throttle position switch is OFF: VTA ≧ 0.1 V and ≦ 0.95 V
P0135/21 P0141/21 P0155/28 P0161/28 (w/ TWC)	The heater circuit in which an abnormality is detected is turned off	Ignition switch OFF
P0325/52 P0330/53	Max. timing retardation	Ignition switch OFF
P1300/14 P1305/15 P1310/14 P1315/14 P1320/14 P1325/14 P1330/14 P1340/14	Fuel cut	Returned to normal condition

5. CHECK FOR INTERMITTENT PROBLEMS

HAND–HELD TESTER only:

By putting the vehicle's engine ECU in check (test) mode, 1 trip detection logic is possible instead of 2 trip detection logic and sensitivity to detect open circuits is increased. This makes it easier to detect intermittent problems.

(1) Clear the DTCs.
(2) Set the check (test) mode.
(3) Perform a simulation test (See page IN–9).
(4) Check the connector and terminal (See page IN–19).
(5) Handle the connector (See page IN–19).

6. BASIC INSPECTION

When the malfunction code is not confirmed in the DTC check, troubleshooting should be performed in the order for all possible circuits to be considered as the causes of the problems. In many cases, by carrying out the basic engine check shown in the following flow chart, the location causing the problem can be found quickly and efficiently. Therefore, use of this check is essential in engine troubleshooting.

1	**Is battery positive voltage 11 V or more when engine is stopped?**

NO **Charge or replace battery.**

YES

2	**Is engine cranked?**

NO **Proceed to problem symptoms table on page DI–25.**

YES

3	**Does engine start?**

NO **Go to step 7.**

YES

4 Check air filter.

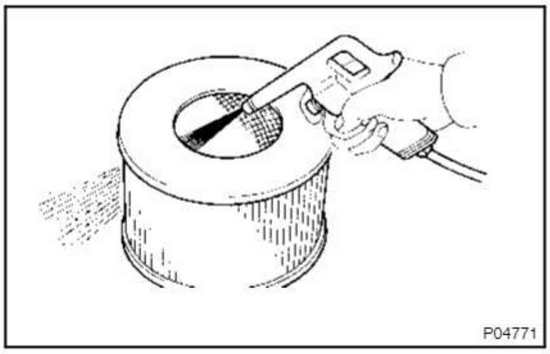

PREPARATION:

Remove the air filter.

CHECK:

Visual check that the air filter is not dirty or excessive oily.

HINT:

If necessary, clean the filter.

NG **Repair or replace**

OK

5 Check idle speed.

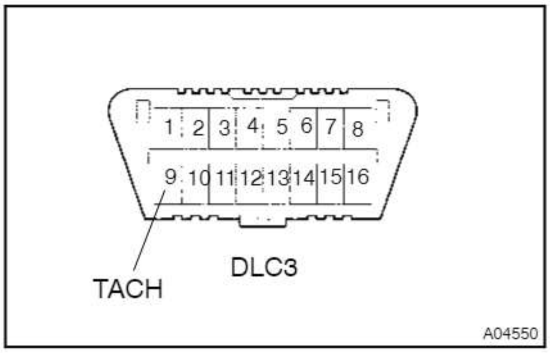

PREPARATION:

(a) Warm up the engine to normal operating temperature.
(b) Switch off all accessories.
(c) Switch off air conditioning.
(d) Shift transmission into "N" position.
(e) Connect the hand–held tester to the DLC3 on the vehicle.
(f) If you have no hand–held tester, connect tachometer test prove to terminal 9 (TACH) of the DLC3.
SST 09843–18030

NOTICE:

As some tachometers are not compatible with this ignition system, we recommend that you confirm the compatibility of your until before use.

CHECK:

Check the idle speed.

OK:

Idle speed: 650 – 750 rpm

NG **Proceed to problem symptoms table on page DI–25.**

OK

6	**Check ignition timing.**

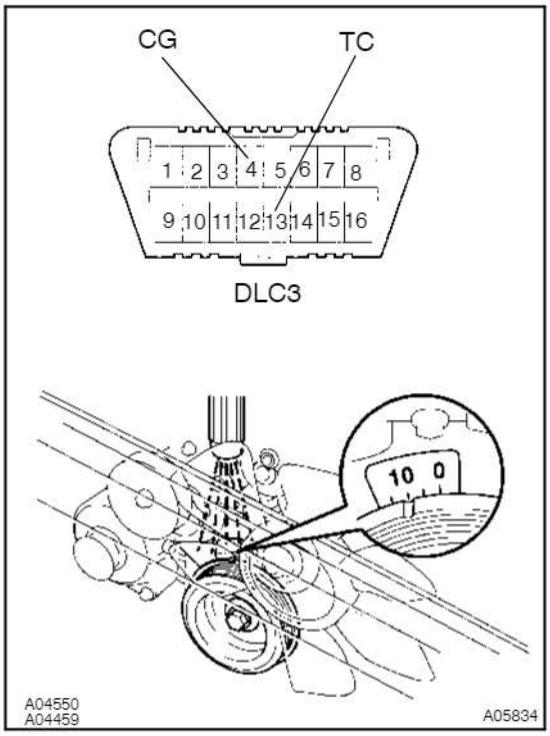

PREPARATION:

(a) Warm up the engine to normal operating temperature.

(b) Shift transmission into ”N” position.

(c) Keep the engine speed at idle.

(d) Using SST, connect terminals 13 (TC) and 4 (CG) of the DLC3.
SST 09843–18040

(e) Using a timing light, connect the tester to the ignition coil connector wire (See page EM–11).

CHECK:

Check ignition timing.

OK:

Ignition timing: 10° BTDC at idle

NG	**Proceed to page IG–1 and continue to troubleshoot.**

OK

Proceed to problem symptoms table on page DI–25.

7	**Check fuel pressure.**

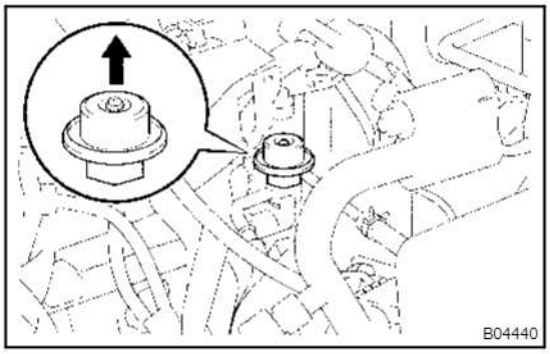

PREPARATION:

(a) Be sure that enough fuel is in the tank.

(b) Connect the hand–held tester to the DLC3.

(c) Turn the ignition switch ON and push hand–held tester main switch ON.

(d) Use ACTIVE TEST mode to operate the fuel pump.

(e) Please refer to the hand–held tester operator's manual for further details.

(f) If you have no hand–held tester, connect the positive (+) and negative (–) leads from the battery to the fuel pump connector (See page FI–7).

CHECK:

Check that pulsation damper screw rises up when fuel pump operates.

HINT:

At this time, you will hear a fuel flowing noise.

NG	**Proceed to page FI–7 and continue to troubleshoot.**

OK

8	**Check for spark.**

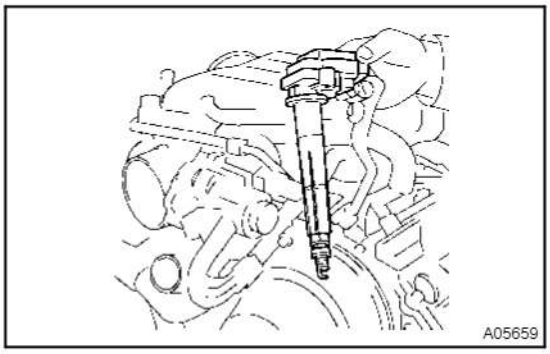

PREPARATION:

(a) Remove the ignition coil from the spark plug.
(b) Remove the spark plug.
(c) Install the spark plug to the ignition coil.
(d) Disconnect the injector connector.
(e) Ground the spark plug.

CHECK:

Check if spark occurs while engine is being cranked.

NOTICE:

To prevent excess fuel being injected from the injectors during this test, don't crank the engine for more than 5 ~ 10 seconds at a time.

NG — **Proceed to page IG–1 and continue to troubleshoot.**

OK

Proceed to problem symptoms table on page DI–25.

7. ENGINE OPERATING CONDITION

NOTICE:

The values given below for "Normal Condition" are representative values, so a vehicle may still be normal even if its value varies from those listed here. So do not decide whether a part is faulty or not solely according to the "Normal Condition" here.

Hand–held tester display	Measurement Item	Normal Condition*
FUEL SYS #1	Fuel System Bank 1 OPEN: Air–fuel ratio feedback stopped CLOSED: Air–fuel ratio feedback operating	Idling after warming up: CLOSED
FUEL SYS #2	Fuel System Bank 2 OPEN: Air–fuel ratio feedback stopped CLOSED: Air–fuel ratio feedback operating	Idling after warming up: CLOSED
CALC LOAD	Calculator Load: Current intake air volume as a proportion of max. intake air volume	Idling: 12.0 ~ 18.0 % Racing without load (2,500rpm): 11.0~ 17.0 %
COOLANT TEMP.	Water Temp. Sensor Value	After warming up: 80 ~ 95°C (176 ~ 203°F)
SHORT FT #1	Short–term Fuel Trim Bank 1	0 ± 20 %
LONG FT #1	Long–term Fuel Trim Bank 1	0 ± 20 %
SHORT FT #2	Short–term Fuel Trim Bank 2	0 ± 20 %
LONG FT #2	Long–term Fuel Trim Bank 2	0 ± 20 %

*: If no conditions are specifically stated for "Idling", it means the shift lever is at N or P position, the A/C switch is OFF and all accessory switches are OFF.

Hand–held tester display	Measurement Item	Normal Condition*
ENGINE SPD	Engine Speed	Idling: 650 ~ 750 rpm
VEHICLE SPD	Vehicle Speed	Vehicle stopped: 0 km/h (0 mph)
IGN ADVANCE	Ignition Advance: Ignition Timing of Cylinder No. 1	Idling: BTDC 5 ~ 15°
INTAKE AIR	Intake Air Temp. Sensor Value	Equivalent to ambient temp.
AFM	Air Flow Rate Through Air Flow Meter	Idling: 4.5 ~ 5.5 gm/sec. Racing without load (2,500 rpm): 13.0 ~ 20.0 gm/sec.
THROTTLE POS	Voltage Output of Throttle Position Sensor Calculated as a percentage: 0 V → 0 %, 5 V → 100 %	Throttle fully closed: 8 ~ 20 % Throttle fully open: 64 ~ 96 %
O2S B1, S1	Voltage Output of Oxygen Sensor Bank 1, Sensor 1	Idling: 0.1 ~ 0.9 V
O2S B1, S2	Voltage Output of Oxygen Sensor Bank 1, Sensor 2	Driving (50 km/h, 31 mph): 0.1 ~ 0.9 V
O2S B2, S1	Voltage Output of Oxygen Sensor Bank 2, Sensor 1	Idling: 0.1 ~ 0.9 V
O2S B2, S2	Voltage Output of Oxygen Sensor Bank 2, Sensor 2	Driving (50 km/h, 31 mph): 0.1 ~ 0.9 V
O2FT B1, S1	Oxygen Sensor Fuel Trim Bank 1, Sensor 1 (Same as SHORT FT #1)	0 ± 20 %
O2FT B2, S1	Oxygen Sensor Fuel Trim Bank 2, Sensor 1 (Same as SHORT FT #2)	0 ± 20 %
INJECTOR	Fuel injection time for cylinder No.1	Idling: 2.1 ~ 3.9 ms
STARTER SIG	Starter Signal	Cranking: ON
A/C SIG	A/C Switch Signal	A/C ON: ON
PNP SW	Park/Neutral Position Switch Signal	P or N position: ON
CTP	Closed Throttle Position	Throttle fully closed: ON
STOP LIGHT SW	Stop Light Switch Signal	Stop light switch ON: ON
FC IDL	Fuel Cut Idle: Fuel cut when throttle valve fully closed, during deceleration	Fuel cut operating: ON
FC TAU	Fuel Cut TAU: Fuel cut during very light load	Fuel cut operating: ON
FUEL PUMP	Fuel Pump Signal	Idling: ON
EVAP (PURGE) VSV	EVAP VSV Signal	VSV operating: ON

*: If no conditions are specifically stated for "Idling", it means the shift lever is at N or P position, the A/C switch is OFF and all accessory switches are OFF.

Hand–held tester display	Measurement Item	Normal Condition*
THROTTLE POS #2	Throttle position sensor No.2 output voltage	Throttle fully closed: 2.0 ~ 2.9 V Throttle fully open: 4.7 ~ 5.1 V
ACCEL POS	Accelerator pedal position sensor No.1 output voltage	Accelerator pedal released: 0.3 ~ 0.9 V Accelerator pedal depressed: 3.2 ~ 4.8 V
ACCEL POS #2	Accelerator pedal position sensor No.2 output voltage	Accelerator pedal released: 1.8 ~ 2.7 V Accelerator pedal depressed: 4.7 ~ 5.1 V
THROTTLE TARGET POS	Target position of throttle valve	Idling: 0.4 ~ 1.1 V
THROTTLE OPEN DUTY	Throttle motor opening duty ratio	Throttle fully closed: 0 % When accelerator pedal is depressed, duty ratio is increased
THROTTLE CLOSE DUTY	Throttle motor closed duty ratio	Throttle fully closed: 0 % When accelerator pedal is quick released, duty ratio is increased
THROTTLE MOTOR CTL	Whether or not throttle motor control is permitted	Idling: ON
THROTTLE CLUTCH CTL	Whether or not magnetic clutch control is permitted	Idling: ON
+BM	Whether or not electric throttle control system power is inputted	Idling: ON
ACCEL IDL	Whether or not accelerator pedal position sensor is detecting idle	Idling: ON
THROTTLE IDL	Whether or not throttle position sensor is detecting idle	Idling: ON
FAIL #1	Whether or not fail safe function is executed	ETCS is failed: ON
FAIL #2	Whether or not fail safe function is executed	ETCS is failed: ON
THROTTLE LEAN VALUE	Throttle fully closed learning value	0.4 ~ 0.8 V
ACCEL LEAN VALUE	Accelerator fully closed learning value	0.4 ~ 0.8 V
THROTTLE MOTOR	Throttle motor control current	Idling: 0 ~ 3.0 A
ETCS MAG CLUTCH	Magnetic clutch control current	0.8 ~ 1.0 A
TOTAL FT B1	Total Fuel Trim Bank 1: Average value for fuel trim system of bank 1	Idling: 0.5 ~ 1.4
TOTAL FT B2	Total Fuel Trim Bank 2: Average value for fuel trim system of bank 2	Idling: 0.5 ~ 1.4
O2 LR B1, S1	Oxygen Sensor Lean Rich Bank 1, Sensor 1 Response time for oxygen sensor output to switch from lean to rich	Idling after warming up: 0 ~ 1,000 msec.
O2 LR B2, S1	Oxygen Sensor Lean Rich Bank 2, Sensor 1 Response time for oxygen sensor output to switch from lean to rich	Idling after warming up: 0 ~ 1,000 msec.
O2 RL B1, S1	Oxygen Sensor Rich Lean Bank 1, Sensor 1 Response time for oxygen sensor output to switch from rich to lean	Idling after warming up: 0 ~ 1,000 msec.
O2 RL B2, S1	Oxygen Sensor Rich Lean Bank 1, Sensor 1 Response time for oxygen sensor output to switch from rich to lean	Idling after warming up: 0 ~ 1,000 msec.

*: If no conditions are specifically stated for "Idling", it means the shift lever is at N or P position, the A/C switch is OFF and all accessory switches are OFF.

DIAGNOSTIC TROUBLE CODE CHART

1. Engine Trouble Codes

HINT:

Parameters listed in the chart may not be exactly the same as your reading due to the type of instrument or other factors.

If a malfunction code is displayed during the DTC check in check mode, check the circuit for that code listed in the table below. For details of each code, turn to the page referred to under the "See Page" for the respective "DTC No." in the DTC chart.

DTC No. (See Page)	Detection Item	Trouble Area	CHK ENG *1	Memory
P0100/31 (DI–27)	Air Flow Circuit Malfunction	• Open or short in air flow meter circuit • Air flow meter • Engine ECU	○	○
P0110/24 (DI–33)	Intake Air Temp. Circuit Malfunction	• Open or short in intake air temp. sensor circuit • Intake air temp. sensor (inside air flow meter) • Engine ECU	–	○
P0115/22 (DI–39)	Water Temp. Circuit Malfunction	• Open or short in water temp. sensor circuit • Water temp. sensor • Engine ECU	○	○
P0120/41 (DI–45)	Throttle Position Sensor Circuit Malfunction	• Open or short in throttle position sensor circuit • Throttle position sensor • Engine ECU	○	○
P0121/41 (DI–50)	Throttle Position Sensor Circuit Range/Performance Problem	• Throttle position sensor • Engine ECU	○	○
*2 P0130/21 (DI–51)	Oxygen Sensor Circuit Malfunction (Bank 1 Sensor 1)	• Oxygen sensor • Fuel trim malfunction	–	○
*2 P0135/21 (DI–57)	Oxygen Sensor Heater Circuit Malfunction (Bank 1 Sensor 1)	• Open or short in heater circuit of oxygen sensor • Oxygen sensor heater • Engine ECU	–	○
*2 P0136/27 (DI–59)	Oxygen Sensor Circuit Malfunction (Bank 1 Sensor 2)	• Oxygen sensor	–	○
*2 P0141/21 (DI–51)	Oxygen Sensor Heater Circuit Malfunction (Bank 1 Sensor 2)	• Same as DTC No. P0135/21	–	○
*2 P0150/28 (DI–51)	Oxygen Sensor Circuit Malfunction (Bank 2 Sensor 1)	• Same as DTC No. P0130/21	–	○
*2 P0155/28 (DI–57)	Oxygen Sensor Heater Circuit Malfunction (Bank 2 Sensor 1)	• Same as DTC No. P0135/21	–	○
*2 P0156/29 (DI–59)	Oxygen Sensor Circuit Malfunction (Bank 2 Sensor 2)	• Same as DTC No. P0136/27	–	○
*2 P0161/28 (DI–57)	Oxygen Sensor Heater Circuit Malfunction (Bank 2 Sensor 2)	• Same as DTC No. P0135/21	–	○

*1: ○ ... Check engine warning light (CHK ENG) light up
– ... Check engine warning light (CHK ENG) does not light up

*2: Only for Europe

DTC No. (See Page)	Detection Item	Trouble Area	CHK ENG *1	Memory
*2 P0171/25 (DI–61)	Fuel Trim System too Lean (Air–Fuel Ratio Lean Malfunction, Bank 1)	• Air intake (hose loose) • Fuel line pressure • Injector blockage • Oxygen sensor malfunction • Air flow meter • Water temp. sensor	–	○
*2 P0174/25 (DI–61)	Fuel Trim System too Rich (Air–Fuel Ratio Lean Malfunction, Bank 2)			
P0325/52 (DI–67)	Knock Sensor 1 Circuit Malfunction (Bank 1)	• Open or short in knock sensor 1 circuit • Knock sensor 1 (looseness) • Engine ECU	○	○
P0330/55 (DI–67)	Knock Sensor 2 Circuit Malfunction (Bank 2)	• Open or short in knock sensor 2 circuit • Knock sensor 2 (looseness) • Engine ECU	○	○
P0335/12, 13 (DI–72)	Crankshaft Position Sensor Circuit Malfunction	• Open or short in crankshaft position sensor circuit • Crankshaft position sensor • Starter • Engine ECU	○	○
P0340/12 (DI–75)	Camshaft Position Sensor Circuit Malfunction	• Open or short in camshaft position sensor circuit • Camshaft position sensor • Starter • Engine ECU	○	○
P0500/42 (DI–77)	Vehicle Speed Sensor Malfunction	• Open or short in No.1 vehicle speed sensor circuit • No.1 vehicle speed sensor • Combination meter • Engine ECU	–	○
P1120/19 (DI–79)	Accelerator Pedal Position Sensor Circuit Malfunction	• Open or short in accelerator pedal position sensor circuit • Accelerator pedal position sensor • Engine ECU	○	○
P1121/19 (DI–84)	Accelerator Pedal Position Sensor Range/Performance Problem	• Accelerator pedal position sensor • Engine ECU	○	○
P1125/89*3 (DI–85)	Throttle Control Motor Circuit Malfunction	• Open or short in throttle control motor circuit • Throttle control motor • Engine ECU	○	○
P1126/89*3 (DI–88)	Magnetic Clutch Circuit Malfunction	• Open or short in magnetic clutch circuit • Magnetic clutch • Engine ECU	○	○
P1127/89*3 (DI–91)	ETCS Actuator Power Source Circuit Malfunction	• Open in ETCS power source circuit • Engine ECU	○	○
P1128/89*3 (DI–93)	Throttle Control Motor Lock Malfunction	• Throttle control motor • Throttle body • Engine ECU	○	○
P1129/89*3 (DI–95)	Electric Throttle Control System Malfunction	• Electric throttle control system • Engine ECU	○	○

*1: ○ ... Check engine warning light (CHK ENG) light up
– ... Check engine warning light (CHK ENG) does not light up

*2: Only for Europe

*3: If the DTC No.89 is indicated on the instrument panel, read the DTC for ETCS, from 2nd STRT indicator (only for A/T)/ ETCS indicator (only for M/T) to get detail of the DTC No.89. If use the hand–held tester, the detail DTC for ETCS are displayed by the hand–held tester

DTC No. (See Page)	Detection Item	Trouble Area	CHK ENG *1	Memory
P1200/78 (DI–96)	Fuel Pump Relay/ECU Circuit Malfunction (Europe)	• Open or short in fuel pump ECU • Fuel pump ECU • Engine ECU power suorce • Fuel pump • Engine ECU	–	○
P1200/78 (DI–100)	Fuel Pump Relay/ECU Circuit Malfunction (Except Europe)	• Open or short in fuel pump relay • Fuel pump relay • Engine ECU	–	○
P1300/14 (DI–103)	Igniter Circuit Malfunction (No.1)	• Open or short in IGF1 or IGT1 circuit from No.1 ignition coil with igniter to engine ECU • No.1 ignition coil with igniter • Engine ECU	○	○
P1305/15 (DI–103)	Igniter Circuit Malfunction (No.2)	• Open or short in IGF2 or IGT2 circuit from No.2 ignition coil with igniter to engine ECU • No.2 ignition coil with igniter • Engine ECU	○	○
P1310/14 (DI–103)	Igniter Circuit Malfunction (No.3)	• Open or short in IGF2 or IGT3 circuit from No.3 ignition coil with igniter to engine ECU • No.3 ignition coil with igniter • Engine ECU	○	○
P1315/14 (DI–103)	Igniter Circuit Malfunction (No.4)	• Open or short in IGF1 or IGT4 circuit from No.4 ignition coil with igniter to engine ECU • No.4 ignition coil with igniter • Engine ECU	○	○
P1320/14 (DI–103)	Igniter Circuit Malfunction (No.5)	• Open or short in IGF2 or IGT5 circuit from No.5 ignition coil with igniter to engine ECU • No.5 ignition coil with igniter • Engine ECU	○	○
P1325/14 (DI–103)	Igniter Circuit Malfunction (No.6)	• Open or short in IGF1 or IGT6 circuit from No.6 ignition coil with igniter to engine ECU • No.6 ignition coil with igniter • Engine ECU	○	○
P1330/14 (DI–103)	Igniter Circuit Malfunction (No.7)	• Open or short in IGF1 or IGT7 circuit from No.7 ignition coil with igniter to engine ECU • No.7 ignition coil with igniter • Engine ECU	○	○
P1335/13 (DI–110)	Crankshaft Position Sensor Circuit Malfunction (during engine running)	• Open or short in crankshaft position sensor circuit • Crankshaft position sensor • Starter • Engine ECU	–	○
P1340/14 (DI–103)	Igniter Circuit Malfunction (No.8)	• Open or short in IGF2 or IGT8 circuit from No.8 ignition coil with igniter to engine ECU • No.8 ignition coil with igniter • Engine ECU	○	○
P1633/89*2 (DI–111)	ECU Malfunction (ETCS Circuit)	• Engine ECU	○	○

*1: ○ ... Check engine warning light (CHK ENG) light up
– ... Check engine warning light (CHK ENG) does not light up

*2: If the DTC No.89 is indicated on the instrument panel, read the DTC for ETCS, from 2nd STRT indicator (only for A/T)/ ETCS indicator (only for M/T) to get detail of the DTC No.89. If use the hand–held tester, the detail DTC for ETCS are displayed by the hand–held tester

2. ETCS Trouble Codes (When not use hand–held tester)

DTC No. (See Page)	Detection Item	Trouble Area	CHK ENG *1	Memory
21 (DI–85)	Throttle Control Motor Circuit Malfunction	•Same as DTC No. P1125/89	○	○
22 (DI–88)	Magnetic Clutch Circuit Malfunction	•Same as DTC No. P1126/89	○	○
23 (DI–91)	ETCS Actuator Power Source Circuit Malfunction	•Same as DTC No. P1127/89	○	○
31 (DI–93)	Throttle Control Motor Lock Malfunction	•Same as DTC No. P1128/89	○	○
32 (DI–95)	Electric Throttle Control System Malfunction	•Same as DTC No. P1129/89	○	○
33 (DI–111)	ECU Malfunction (ETCS)	•Same as DTC No. P1633/89	○	○

*1: ○ ... Check engine warning light (CHK ENG) light up

DI3OT–01

PARTS LOCATION

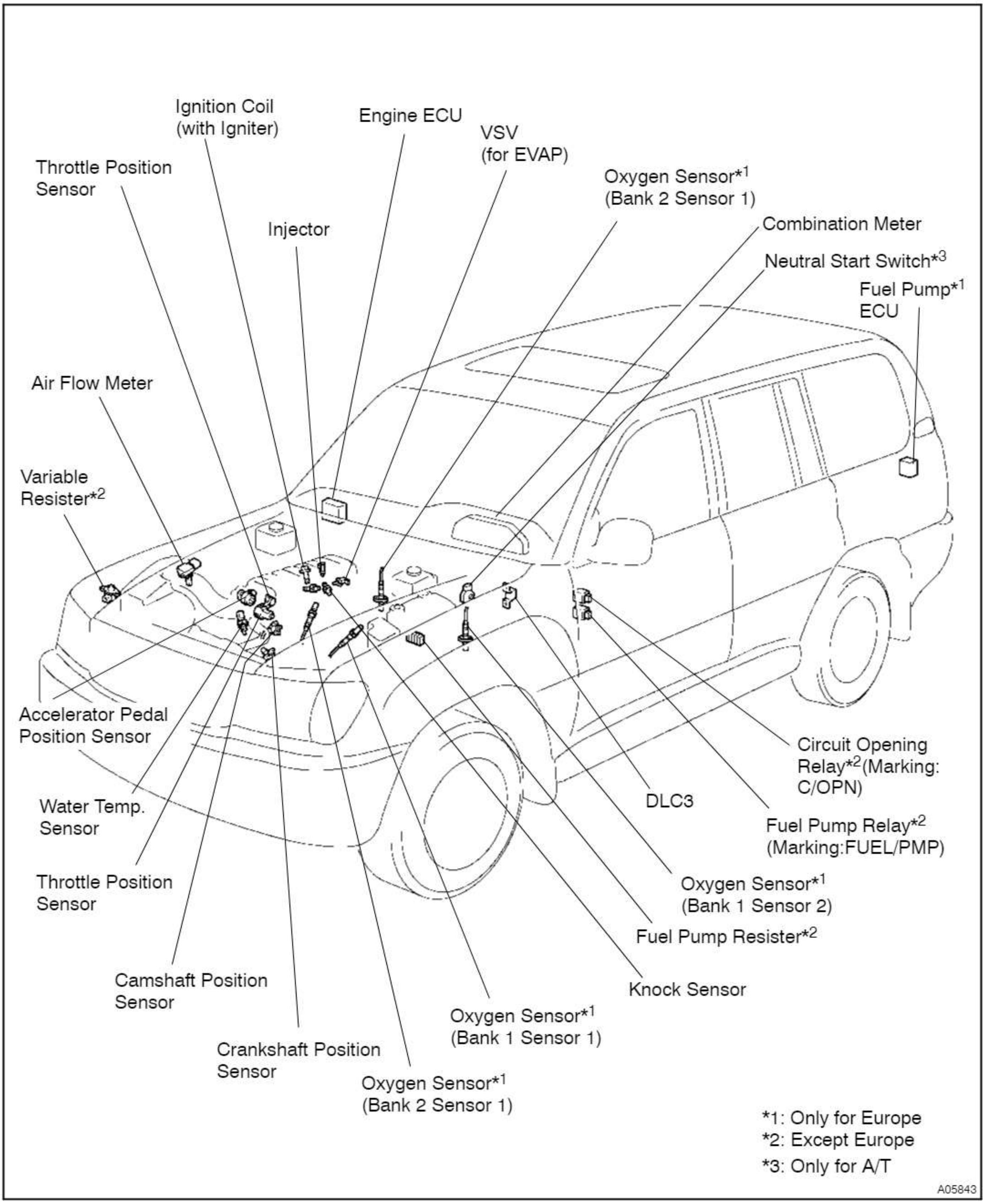

DI3OU–01

TERMINALS OF ECU

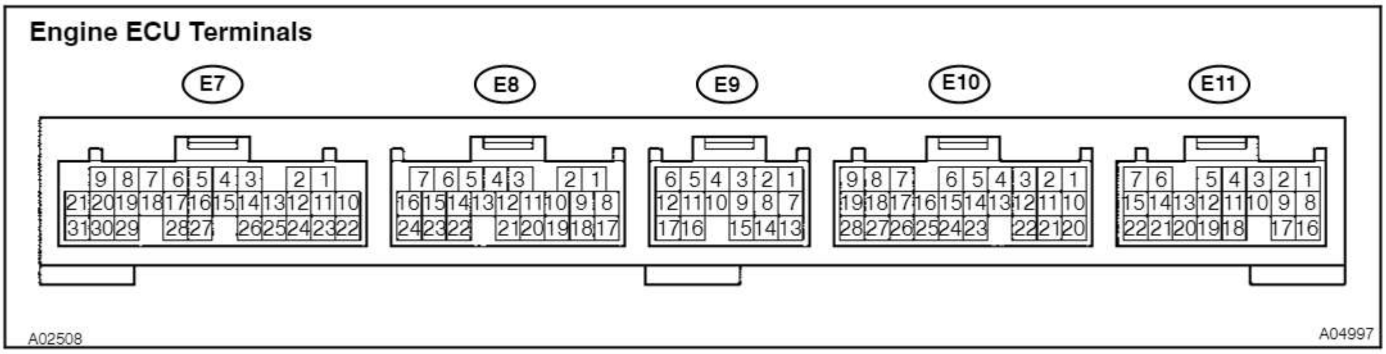

Symbols (Terminals No.)	Wiring Color	Condition	STD Voltage (V)
BATT (E11–1) – E1 (E8–17)	B–R ↔ BR	Always	9 ~ 14
+BM (E11–7) – E1 (E8–17)	Y–B ↔ BR		
IGSW (E11–9) – E1 (E8–17)	B–R ↔ BR	IG switch ON	9 ~ 14
+B (E11–16) – E1 (E8–17)	B–Y ↔ BR		
+B1 (E11–8) – E1 (E8–17)	B–Y ↔ BR		
MREL (E11–10) – E1 (E8–17)	B–W	IG switch ON	9 ~ 14
VC (E8–2) – E2 (E8–18)	L–R ↔ BR–W	IG switch ON	4.5 ~ 5.5
VG (E8–10) – EVG (E8–19)	L–Y ↔ G–W	Idling, P or N position, A/C switch OFF	0.5 ~ 3.0
THA (E8–22) – E2 (E8–18)	Y–B ↔ BR–W	Idling, Intake air temp. 20°C (68°F)	0.5 ~ 3.4
THW (E8–14) – E2 (E8–18)	G–B ↔ BR–W	Idling, Water temp. 80°C (176°F)	0.2 ~ 1.0
VTA (E8–13) – E2 (E8–18)	R–Y ↔ BR–W	IG switch ON Accelerator pedal released	0.4 ~ 1.0
		IG switch ON Accelerator pedal depressed	3.2 ~ 4.8
VTA2 (E8–20) – E2 (E8–18)	Y–B ↔ BR–W	IG switch ON Accelerator pedal released	2.0 ~ 2.9
		IG switch ON Accelerator pedal depressed	4.7 ~ 5.1
VPA (E8–21) – E2 (E8–18)	R ↔ BR–W	IG switch ON Accelerator pedal released	0.3 ~ 0.9
		IG switch ON Accelerator pedal depressed	3.2 ~ 4.8
VPA2 (E8–9) – E2 (E8–18)	R–B ↔ BR–W	IG switch ON Accelerator pedal released	1.8 ~ 2.7
		IG switch ON Accelerator pedal depressed	4.7 ~ 5.1
OXL1 (E8–12)* – E1 (E8–17) OXL2 (E10–18)* – E1 (E8–17) OXR1 (E8–11)* – E1 (E8–17) OXR2 (E10–27)* – 1 (E8–17)	B ↔ BR B ↔ BR W ↔ BR W ↔ BR	Maintain engine speed at 2,500 rpm for 2 minutes after warming up	Pulse generation (See page DI–51)
HTL (E8–4)* – E1 (E8–17) HTL2 (E10–8)* – E1 (E8–17) HTR (E8–3)* – E1 (E8–17) HTR2 (E10–7)* – E1 (E8–17)	R ↔ BR L ↔ BR Y ↔ BR R–B ↔ BR	Idling	Below 3.0
		IG switch ON	9 ~ 14

*: Only for Europe

Symbols (Terminals No.)	Wiring Color	Condition	STD Voltage (V)
#1 (E8–5) – E01 (E7–21) #2 (E8–6) – E01 (E7–21) #3 (E7–1) – E01 (E7–21) #4 (E7–2) – E01 (E7–21) #5 (E7–3) – E01 (E7–21) #6 (E7–4) – E01 (E7–21) #7 (E7–5) – E01 (E7–21) #8 (E7–6) – E01 (E7–21)	Y ↔ W–B B ↔ W–B L ↔ W–B R ↔ W–B G ↔ W–B R–L ↔ W–B W ↔ W–B B–W ↔ W–B	IG switch ON	9 ~ 14
		Idling	Pulse generation (See page DI–120)
KNKL (E7–18) – E1 (E8–17)	B ↔ BR	Maintain engine speed at 4,000 rpm after warming up	Pulse generation (See page DI–67)
KNKR (E7–17) – E1 (E8–17)	W ↔ BR		
G2 (E7–10) – NE– (E7–22)	R ↔ G	Idling	Pulse generation (See page DI–72)
NE+ (E7–23) – NE– (E7–22)	L ↔ G		
PRG (E8–7) – E1 (E8–17)	L–B ↔ BR	IG switch ON	9 ~ 14
SPD (E10–15) – E1 (E8–17)	V ↔ BR	IG switch ON Rotate driving wheel slowly	Pulse generation (See page DI–77)
CL+ (E7–29) – CL– (E7–24)	G ↔ L	Idling	Pulse generation (See page DI–88)
M+ (E7–8) – E1 (E8–17) M– (E7–7) – E1 (E8–17)	R ↔ BR W ↔ BR	Idling	Pulse generation (See page DI–85)
DI (E11–4)*1 – E1 (E8–17)	G–W ↔ BR	IG switch ON	9 ~ 14
FPC (E11–5)*1 – E1 (E8–17)	G–R ↔ BR	IG switch ON	0 ~ 3.0
FPR (E11–4)*2 – E1 (E8–17)	G–W ↔ BR	IG switch ON	0 ~ 3.0
FC (E11–5)*2 – E1 (E8–17)	B–W ↔ BR	IG switch ON	9 ~ 14
IGT1 (E7–11) – E1 (E8–17) IGT2 (E7–12) – E1 (E8–17) IGT3 (E7–13) – E1 (E8–17) IGT4 (E7–14) – E1 (E8–17) IGT5 (E7–15) – E1 (E8–17) IGT6 (E7–16) – E1 (E8–17) IGT7 (E7–25) – E1 (E8–17) IGT8 (E7–26) – E1 (E8–17)	B ↔ BR R ↔ BR L ↔ BR G ↔ BR Y ↔ BR B–Y ↔ BR B–L ↔ BR L–B ↔ BR	Idling	Pulse generation (See page DI–103)
IGF1 (E7–27) – E1 (E8–17) IGF2 (E7–28) – E1 (E8–17)	B–W ↔ BR B–R ↔ BR	IG switch ON	4.5 ~ 5.5
		Idling	Pulse generation (See page DI–103)
STP (E10–6) – E1 (E8–17)	G–W ↔ BR	Brake pedal is depressed	7.5 ~ 14
		Brake pedal is released	Below 1.5
STA (E10–17) – E1 (E8–17)	B–R *3 ↔ BR B–W *4 ↔ BR	Shift lever position P or N position, ignition switch START	6.0 or more
NSW (E10–20)*3 – E1 (E8–17)	B–W ↔ BR	IG switch ON Other shift position in "P" ,"N" position	9 ~ 14
		IG switch ON Shift position in "P" ,"N" position	0 ~ 3.0
W (E11–6) – E1 (E8–17)	W ↔ BR	Idling	9 ~ 14
		IG switch ON	Below 3.0

*1: Only for Europe
*2: Except Europe
*3: Except M/T (LHD)
*4: Only for M/T(LHD)

Symbols (Terminals No.)	Wiring Color	Condition	STD Voltage (V)
ACT (E10–13) – E1 (E8–17)	L–B ↔ BR	A/C switch OFF	Below 3.0
		A/C switch ON at idling	9 ~ 14
A/C (E10–25) – E1 (E8–17)	W–G ↔ BR	A/C switch ON at idling	Below 3.0
		A/C switch OFF	7.5 ~ 14
ST1– (E11–19) – E1 (E8–17)	R–G ↔ BR	IG switch ON, Brake pedal is depressed	Below 1.5
		IG switch ON, Brake pedal is released	7.5 ~ 14
SIL (E11–11) – E1 (E8–17)	V–W ↔ BR	During transmission	Pulse generation
ELS (E10–12) – E1 (E8–17)	G–W ↔ BR	Taillight switch ON, Defogger switch ON	7.5 ~ 14
		Taillight switch OFF, Defogger switch OFF	0 ~ 1.5
TACH (E10–16) – E1 (E8–17)	B ↔ BR	Idling	Pulse generation
KSW (E11–20) – E1 (E8–17)	R–B ↔ BR	At the time of inserting the key	Below 1.5
		In the condition without the key inserted	4 ~ 5
RXCK (E11–13) – E1 (E8–17)	V–G ↔ BR	At the time of inserting the key	Pulse generation
CODE (E11–12) – E1 (E8–17)	L–B ↔ BR	At the time of inserting the key	Pulse generation
TXCT (E11–14) – E1 (E8–17)	R–Y ↔ BR	At the time of inserting the key	Pulse generation

PROBLEM SYMPTOMS TABLE

When the malfunction is not confirmed in the diagnostic trouble code check and the problem still can not be confirmed in the basic inspection, proceed to this problem symptoms table and troubleshoot according to the numbered order given below.

Symptom	Suspect Area	See page
Engine does not crank (Does not start)	1. Starter 2. Starter relay 3. Neutral start switch circuit*1 4. Body ECU	ST–15 ST–16 *4 *4
No initial combustion (Does not start)	1. Engine ECU power source circuit 2. Ignition coil with igniter 3. Fuel pump control circuit 4. Fuel control switch*2 5. Injector circuit	DI–115 IG–1 DI–100 FI–35 DI–120
No complete combustion (Does not start)	1. Fuel pump control circuit 2. Ignition coil with igniter 3. Injector circuit	DI–100 IG–1 DI–120
Engine cranks normally (Difficult to start)	1. Starter signal circuit 2. Fuel pump control circuit 3. Ignition coil with igniter 4. Spark plug 5. Compression 6. Injector circuit	DI–112 DI–100 IG–1 IG–1 EM–5 DI–120
Cold engine (Difficult to start)	1. Starter signal circuit 2. Fuel pump control circuit 3. Injector circuit 4. Ignition coil with igniter 5. Spark plug	DI–112 DI–100 DI–120 IG–1 IG–1
Hot engine (Difficult to start)	1. Starter signal circuit 2. Fuel pump control circuit 3. Injector circuit 4. Ignition coil 5. Spark plug	DI–112 DI–100 DI–120 IG–1 IG–1
High engine idle speed (Poor idling)	1. A/C signal circuit (Compressor circuit) 2. Engine ECU power source circuit 3. Neutral start switch circuit*1 4. Back up power source circuit	*4 DI–115 *4 DI–129
Low engine idle speed (Poor idling)	1. A/C signal circuit (Compressor circuit) 2. Neutral start switch circuit*1 3. Fuel pump control circuit 4. Injector circuit 5. Back up power source circuit	*4 *4 DI–100 DI–120 DI–129
Rough idling (Poor idling)	1. Injector circuit 2. Variable resistor circuit*3 3. Ignition coil with igniter 4. Compression 5. Fuel pump control circuit 6. Back up power source circuit	DI–120 DI–124 IG–1 EM–5 DI–100 DI–129

*1: Only for A/T
*2: Only for Europe
*3: w/o TWC
*4: See Pub. No. RM616E1

Symptom	Suspect Area	See page
Hunting (Poor idling)	1. Engine ECU power source circuit 2. Fuel pump control circuit	DI–115 DI–100
Hesitation/Poor acceleration (Poor driveability)	1. Injector circuit 2. Fuel pump control circuit 3. Variable resistor circuit*3 4. Ignition coil with igniter 5. A/T faulty*1	DI–120 DI–96 DI–124 IG–1 *4
Muffler explosion, after fire (Poor driveability)	1. Ignition coil 2. Spark plug 3. Injector circuit 4. Variable resistor circuit*3	IG–1 IG–1 DI–120 DI–124
Surging (Poor driveability)	1. Fuel pump control circuit 2. Variable resistor circuit*3 3. Spark plug 4. Injector circuit	DI–100 DI–124 IG–1 DI–120
Engine stall (Soon after starting)	1. Fuel pump control circuit 2. Air flow meter circuit	DI–100 DI–27
Engine stall (After accelerator pedal depressed)	1. Air flow meter circuit	DI–27
Engine stall (After accelerator pedal released)	1. Air flow meter circuit 2. Engine ECU	DI–27 IN–19
Engine stall (During A/C operation)	1. A/C signal circuit (Compressor circuit) 2. Engine ECU	*4 IN–19
Engine stall (When shifting N to D)	1. Neutral start switch circuit*1	*4

*1: Only for A/T

*3: w/o TWC

*4: See Pub. No. RM616E1

CIRCUIT INSPECTION

DTC	P0100/31	Air Flow Circuit Malfunction

CIRCUIT DESCRIPTION

The air flow meter uses a platinum hot wire. The hot wire air flow meter consists of a platinum hot wire, thermistor and a control circuit installed in a plastic housing. The hot wire air flow meter works on the principle that the hot wire and thermistor located in the intake air bypass of the housing detect any changes in the intake air temperature.

The hot wire is maintained at the set temperature by controlling the current flow through the hot wire. This current flow is then measured as the output voltage of the air flow meter.

The circuit is constructed so that the platinum hot wire and thermistor provide a bridge circuit, with the power transistor controlled so that the potential of A and B remains equal to maintain the set temperature.

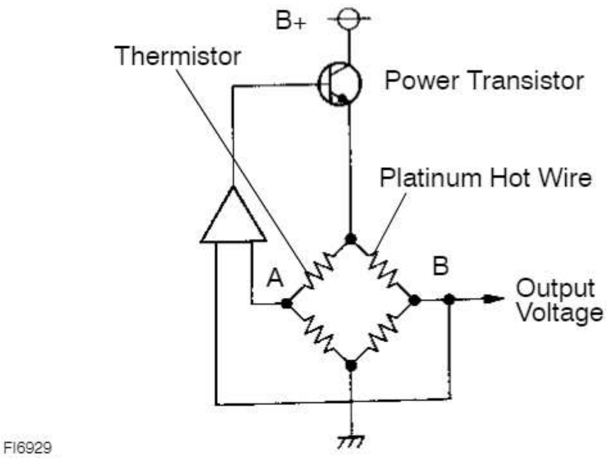

FI6929
B05010

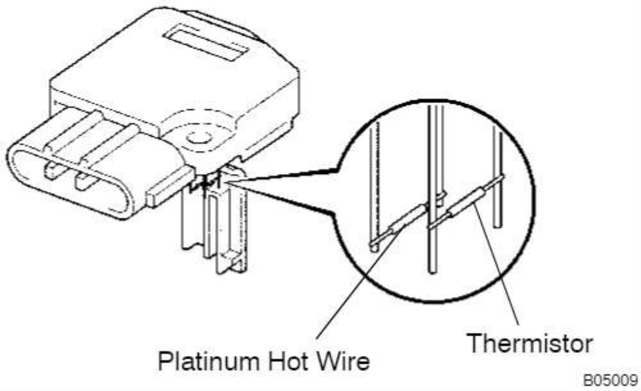

B05009

DTC No.	DTC Detecting Condition	Trouble Area
P0100/31	Open or short in air flow meter circuit with more than 3 sec. engine speed less than 4,000 rpm	• Open or short in air flow meter circuit • Air flow meter • Engine ECU
	Open or short in air flow meter circuit with more than 3 sec. engine speed 4,000 rpm or more (2 trip detection logic)	

HINT:

After confirming DTC P0100/31 use the hand–held tester to confirm the air flow ratio from CURRENT DATA.

Air Flow Value (gm/sec.)	Malfunction
Approx. 0.0	• Air flow meter power source circuit open • VG circuit open or short
271.0 or more	• EVG circuit open

WIRING DIAGRAM

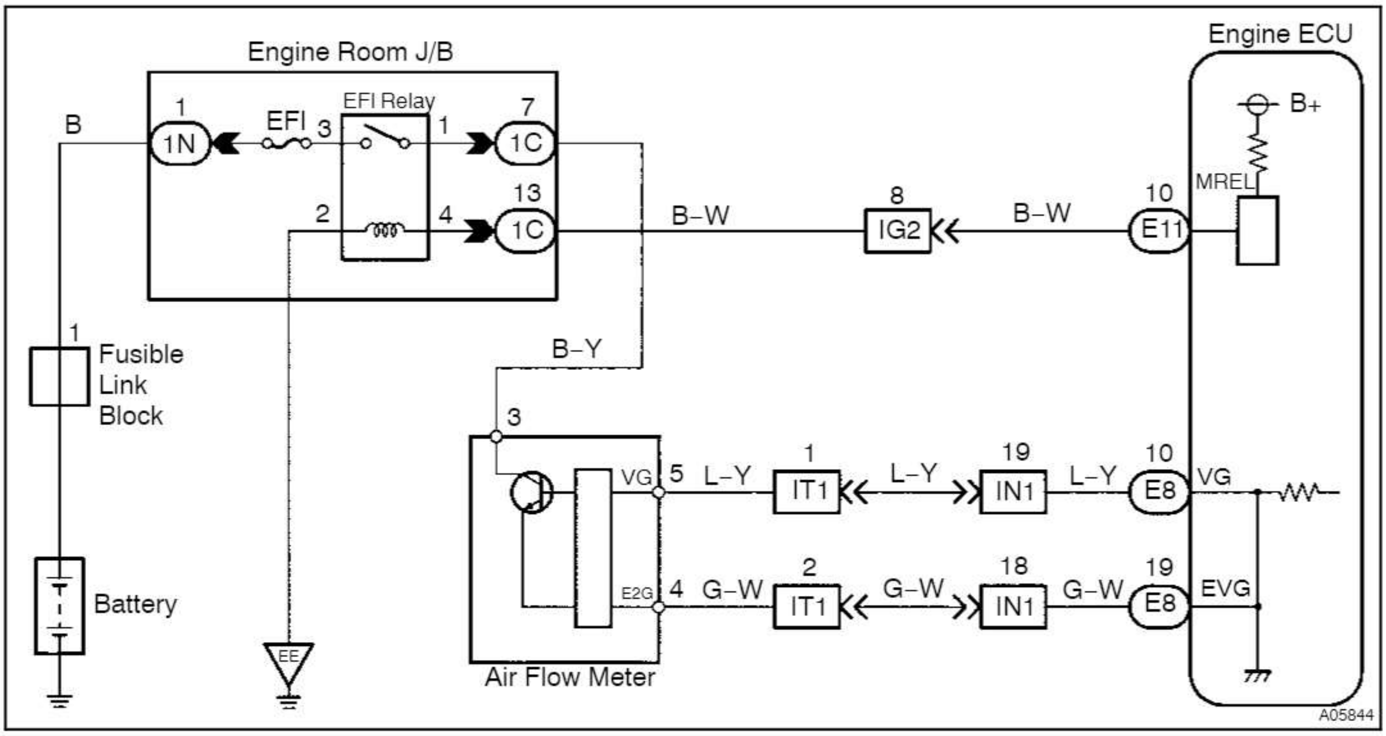

INSPECTION PROCEDURE

When using hand–held tester

HINT:

Read freeze frame data using hand–held tester. Because freeze frame records the engine conditions when the malfunction is detected, when troubleshooting it is useful for determining whether the vehicle was running or stopped, the engine warmed up or not, the air–fuel ratio lean or rich, etc. at the time of the malfunction.

1	**Connect hand–held tester, and read value of air flow rate.**

PREPARATION:

(a) Connect the hand–held tester to the DLC3.

(b) Turn the ignition switch ON and push the hand–held tester main switch ON.

(c) Start the engine.

CHECK:

Read air flow rate on the hand–held tester.

RESULT:

	Type I	Type II
Air flow rata (gm/sec.)	0.0	271.0 or more

Type I	**Go to step 2.**
Type II	**Go to step 5.**

2	**Check voltage of air flow meter power source.**

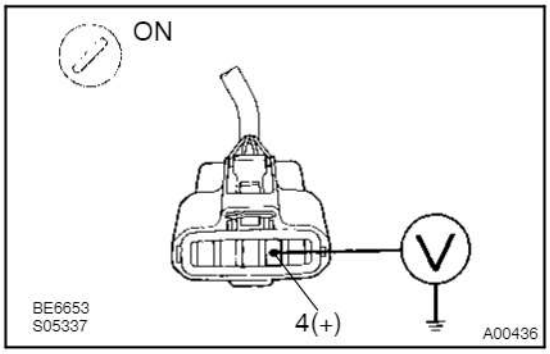

PREPARATION:

(a) Disconnect the air flow meter connector.

(b) Turn the ignition switch ON.

CHECK:

Measure voltage between terminal 4 of the air flow meter connector and body ground.

OK:

Voltage: 9 – 14 V

NG → **Check for open in harness and connector between EFI main relay (Marking: EFI) and air flow meter (See page IN–19).**

OK

3	**Check voltage between terminals VG of engine ECU connector and body ground.**

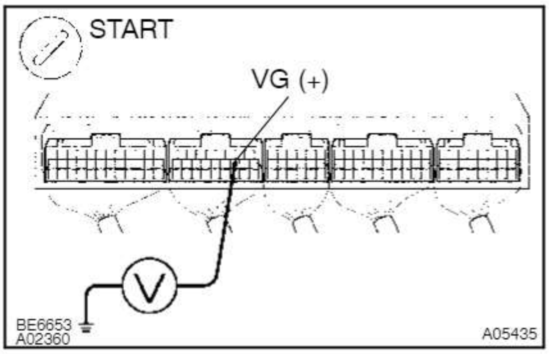

PREPARATION:

(a) Remove the glove compartment door.

(b) Start the engine.

CHECK:

Measure voltage between terminal VG of the engine ECU connector and body ground while engine is idling.

OK:

Voltage:
0.5 – 3.0 V (P or N position and A/C switch OFF)

OK → **Check and replace engine ECU (See page IN–19).**

NG

4 **Check for open and short in harness and connector between air flow meter and engine ECU (See page IN–19).**

NG **Repair or replace harness or connector.**

OK

Replace air flow meter.

5 **Check continuity between terminal EVG of engine ECU connector and body ground.**

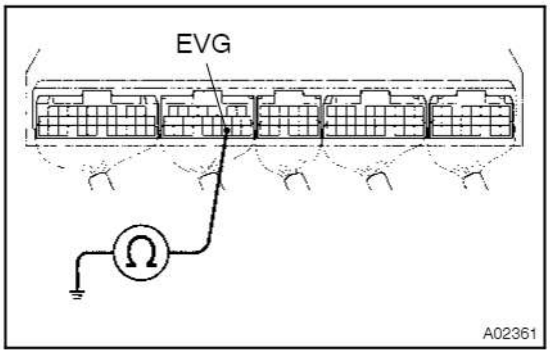

PREPARATION:

Remove the glove compartment door.

CHECK:

Check continuity between terminal EVG of the engine ECU connector and body ground.

OK:

Continuity (1 Ω or less)

NG **Check and replace engine ECU (See page IN–19).**

OK

6 **Check for open in harness and connector between air flow meter and engine ECU (See page IN–19).**

NG **Repair or replace harness or connector.**

OK

Replace air flow meter.

When not using hand–held tester

1 **Check voltage between terminals VG of engine ECU connector and body ground.**

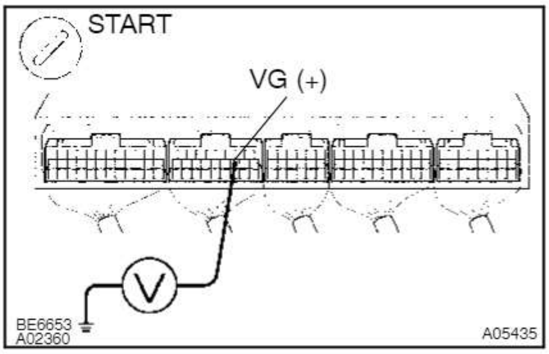

PREPARATION:

(a) Remove the glove compartment door.

(b) Start the engine.

CHECK:

Measure voltage between terminal VG of the engine ECU connector and body ground while engine is idling.

OK:

Voltage:
0.5 – 3.0 V (P or N position and A/C switch OFF)

OK **Check and replace engine ECU (See page IN–19).**

NG

2 **Check voltage of air flow meter power source.**

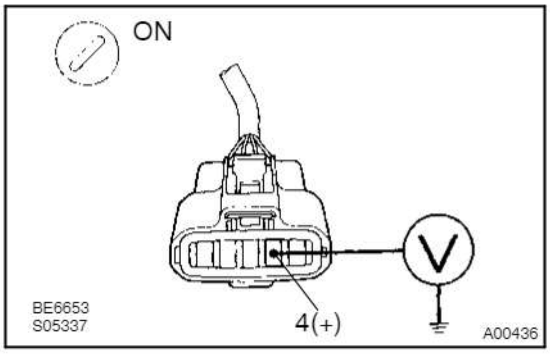

PREPARATION:

(a) Disconnect the air flow meter connector.

(b) Turn the ignition switch ON.

CHECK:

Measure voltage between terminal 4 of the air flow meter connector and body ground.

OK:

Voltage: 9 – 14 V

NG **Check for open in harness and connector between EFI main relay (Marking: EFI) and air flow meter (See page IN–19).**

OK

3	**Check for open in harness and connector between air flow meter and engine ECU (See page IN–19).**

NG → **Repair or replace harness or connector.**

OK

Replace air flow meter.

DTC P0110/24 Intake Air Temp. Circuit Malfunction

(fig. 1)

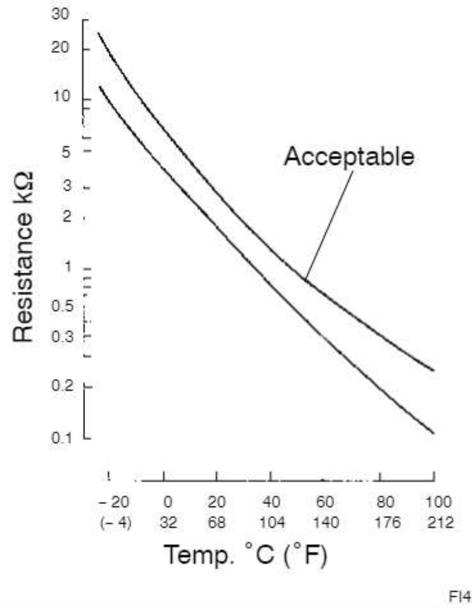

The intake air temp. sensor is built into the air flow meter and senses the intake air temperature.

A thermistor built in the sensor changes the resistance value according to the intake air temperature.

The lower the intake air temperature, the greater the thermistor resistance value, and the higher the intake air temperature, the lower the thermistor resistance value (See fig. 1).

The intake air temp. sensor is connected to the engine ECU (See below). The 5 V power source voltage in the engine ECU is applied to the intake air temp. sensor from the terminal THA via resistor R.

That is, the resistor R and the intake air temp. sensor are connected in series. When the resistance value of the intake air temp. sensor changes in accordance with changes in the intake air temperature, the potential at terminal THA also changes. Based on this signal, the engine ECU increases the fuel injection volume to improve driveability during cold engine operation.

DTC No.	DTC Detecting Condition	Trouble Area
P0110/24	Open or short in intake air temp. sensor circuit	• Open or short in intake air temp. sensor circuit • Intake air temp. sensor (inside air flow meter) • Engine ECU

HINT:

After confirming DTC P0110/24 use the hand–held tester to confirm the intake air temperature from CURRENT DATA.

Temperature Displayed	Malfunction
–40°C (–40°F)	Open circuit
140°C (284°F) or more	Short circuit

WIRING DIAGRAM

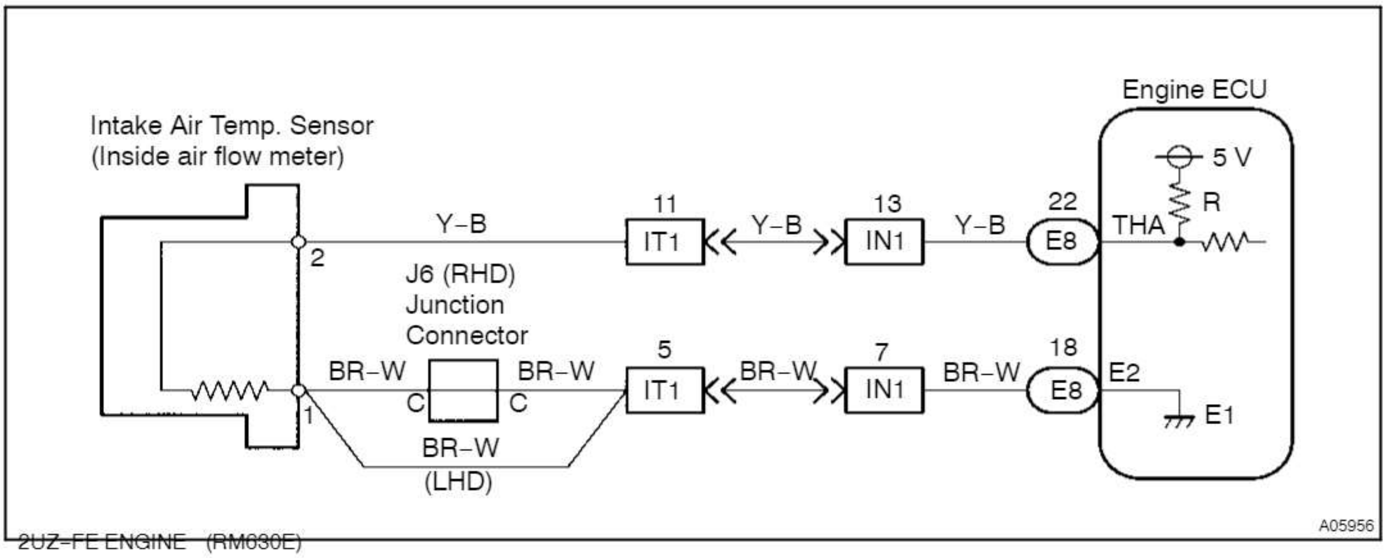

INSPECTION PROCEDURE

HINT:

- If DTC P0110/24 (Intake Air Temp. Circuit Malfunction), P0115/22 (Water Temp. Circuit Malfunction), P0120/41 (Throttle Position Sensor Circuit Malfunction), P1120/19 (Accelerator Pedal Position Sensor Circuit Malfunction) are output simultaneously, E2 (Sensor Ground) may be open.
- Read freeze frame data using hand–held tester. Because freeze frame records the engine conditions when the malfunction is detected, when troubleshooting it is useful for determining whether the vehicle was running or stopped, the engine warmed up or not, the air–fuel ratio lean or rich, etc. at the time of the malfunction.

When using hand–held tester

1	**Connect hand–held tester, and read value of intake air temperature.**

PREPARATION:

(a) Connect the hand–held tester to the DLC3.

(b) Turn the ignition switch ON and push the hand–held tester main switch ON.

CHECK:

Read temperature value on the hand–held tester.

OK:

Same as actual intake air temperature

HINT:

- If there is open circuit, hand–held tester indicates –40°C (–40°F).
- If there is short circuit, hand–held tester indicates 140°C (284°F) or more.

NG

–40°C (–40°F)...Go to step 2.
140°C (284°F) or more...Go to step 4.

OK

Check for intermittent problems
(See page DI–4).

2 Check for open in harness or engine ECU.

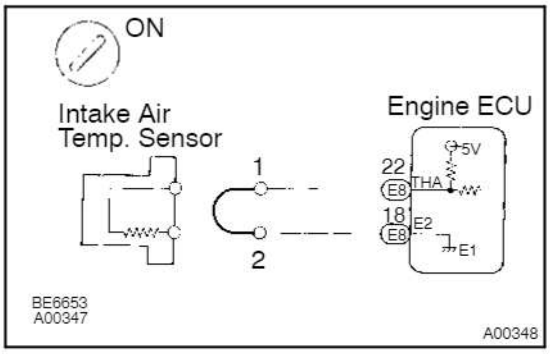

PREPARATION:

(a) Disconnect the air flow meter connector.
(b) Connect the sensor wire harness terminals together.
(c) Turn the ignition switch ON.

CHECK:

Read temperature value on the hand–held tester.

OK:

Temperature value: 140°C (284°F) or more

OK → **Confirm good connection at sensor. If OK, replace air flow meter.**

NG

3 Check for open in harness or engine ECU.

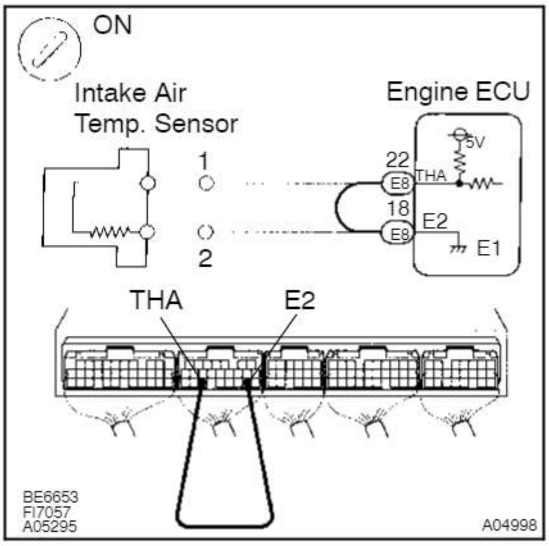

PREPARATION:

(a) Remove the glove compartment door.
(b) Connect between terminals THA and E2 of the engine ECU connector.

HINT:

Air flow meter connector is disconnected.

Before checking, do a visual and contact pressure check for the engine ECU connector (See page IN–19).

CHECK:

Read temperature value on the hand–held tester.

OK:

Temperature value: 140°C (284°F) or more

OK → **Open in harness between terminals E2 or THA, repair or replace harness.**

NG

Confirm good connection at engine ECU.
If OK, check and replace engine ECU.
(See page IN–19)

4 Check for short in harness and engine ECU.

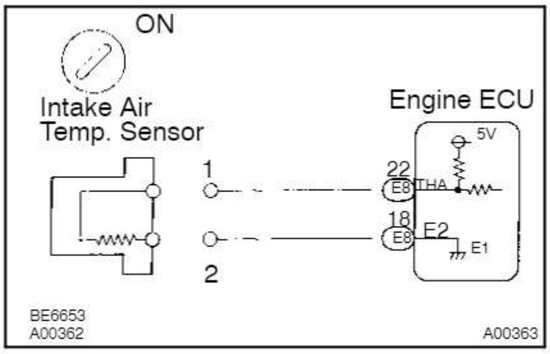

PREPARATION:

(a) Disconnect the air flow meter connector.

(b) Turn the ignition switch ON.

CHECK:

Read temperature value on the hand–held tester.

OK:

Temperature value: –40°C (–40°F)

OK **Replace air flow meter.**

NG

5 Check for short in harness or engine ECU.

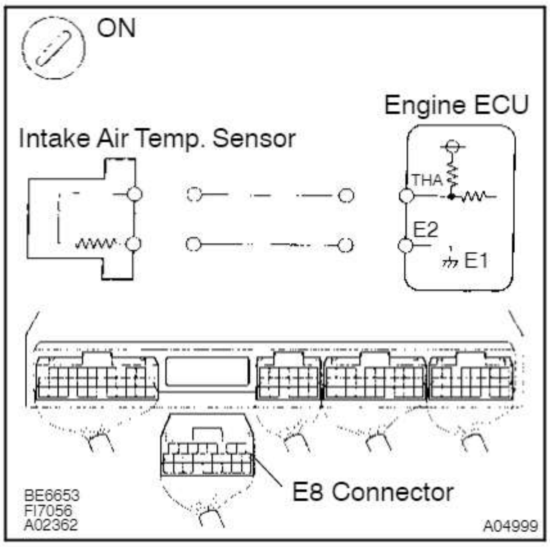

PREPARATION:

(a) Remove the glove compartment door.

(b) Disconnect the E8 connector of the engine ECU.

HINT:

Air flow meter connector is disconnected.

(c) Turn the ignition switch ON.

CHECK:

Read temperature value on the hand–held tester.

OK:

Temperature value: –40°C (–40°F)

OK **Repair or replace harness or connector.**

NG

Check and replace engine ECU (See page IN–19).

When not using hand–held tester

1	**Check voltage between terminals THA and E2 of engine ECU connector.**

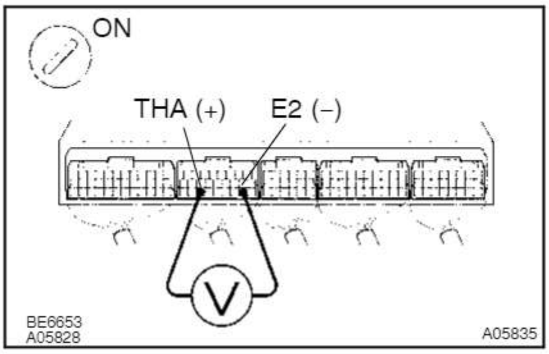

PREPARATION:

(a) Remove the glove compartment door.

(b) Turn ignition switch ON.

CHECK:

Measure voltage between terminals THA and E2 of engine ECU connector.

OK:

Intake air temperature	Voltage
20°C (68°F)	0.5 – 3.4 V
60°C (140°F)	0.2 – 1.0 V

OK **Check for intermittent problems (See page IN–19).**

NG

2	**Check intake air temp. sensor.**

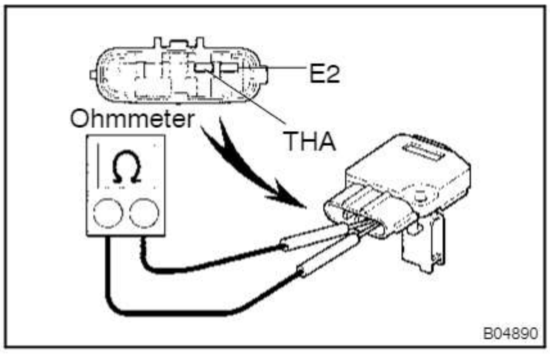

PREPARATION:

Disconnect the air flow meter connector.

CHECK:

Measure resistance between terminals THA and E2 of air flow meter connector.

OK:

Resistance is within acceptable zone on chart.

Intake air temperature	Resistance
20°C (68°F)	2 – 3 kΩ
80°C (176°F)	0.2 – 0.4 kΩ

NG **Replace air flow meter.**

OK

3	**Check for open and short in harness and connector between engine ECU and intake air temp. sensor (See page IN–19).**

NG → **Repair or replace harness or connector.**

OK

Check and replace engine ECU (See page IN–19).

DTC	P0115/22	Water Temp. Circuit Malfunction

CIRCUIT DESCRIPTION

A thermistor built into the water temp. sensor changes the resistance value according to the water temperature.

The structure of the sensor and connection to the engine ECU is the same as in the DTC P0110/24 (Intake Air Temp. Circuit Malfunction) shown on page DI–33.

DTC No.	DTC Detecting Condition	Trouble Area
P0115/22	Open or short in water temp. sensor circuit	• Open or short in water temp. sensor circuit • Water temp. sensor • Engine ECU

HINT:

After confirming DTC P0115/22 use the hand–held tester to confirm the water temperature from CURRENT DATA.

Temperature Displayed	Malfunction
–40°C (–40°F)	Open circuit
140°C (284°F) or more	Short circuit

WIRING DIAGRAM

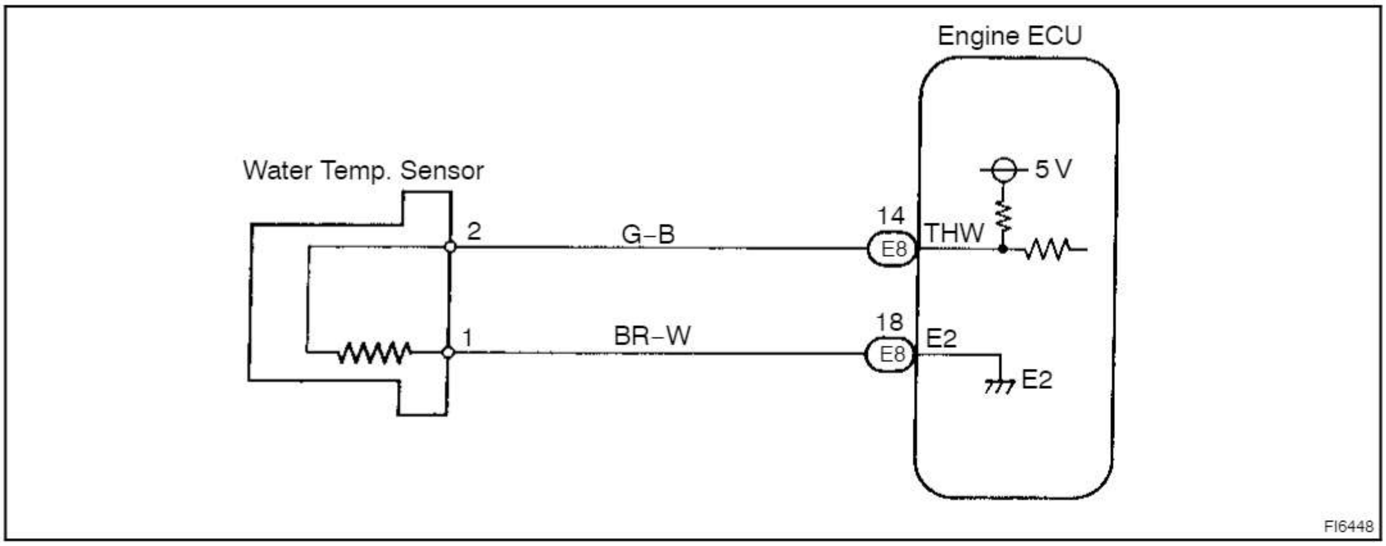

When using hand–held tester

HINT:

- If DTC P0110/24 (Intake Air Temp. Circuit Malfunction), P0115/22 (Water Temp. Circuit Malfunction), P0120/41 (Throttle Position Sensor Circuit Malfunction), P1120/19 (Accelerator Pedal Position Sensor Circuit Malfunction) are output simultaneously, E2 (sensor ground) may be open.
- Read freeze frame data using hand–held tester. Because freeze frame records the engine conditions when the malfunction is detected, when troubleshooting it is useful for determining whether the vehicle was running or stopped, the engine warmed up or not, the air–fuel ratio lean or rich, etc. at the time of the malfunction.

1	**Connect hand–held tester, and read value of water temperature.**

PREPARATION:

(a) Connect the hand–held tester to the DLC3.

(b) Turn the ignition switch ON and switch the hand–held tester main switch ON.

CHECK:

Read temperature value on the hand–held tester.

OK:

Same as actual water temperature

HINT:

- If there is open circuit, Hand–held tester indicates –40°C (–40°F).
- If there is short circuit, Hand–held tester indicates 140°C (284°F) or more.

NG

–40°C (–40°F)...Go to step 2.
140°C (284°F) or more...Go to step 4.

OK

Check for intermittent problems
(See page DI–4).

2 Check for open in harness or engine ECU.

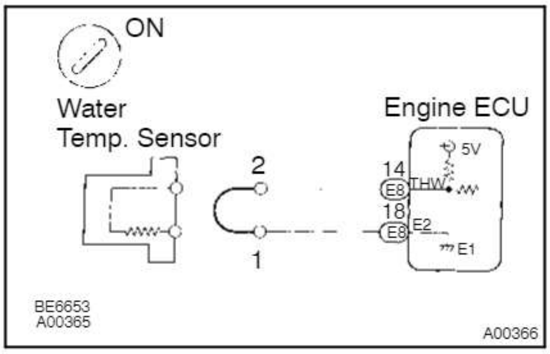

PREPARATION:

(a) Disconnect the water temp. sensor connector.

(b) Connect sensor wire harness terminals together.

(c) Turn the ignition switch ON.

CHECK:

Read temperature value on the hand–held tester.

OK:

Temperature value: 140°C (284°F) or more

OK → **Confirm good connection at sensor. If OK, replace water temp. sensor.**

NG

3 Check for open in harness or engine ECU.

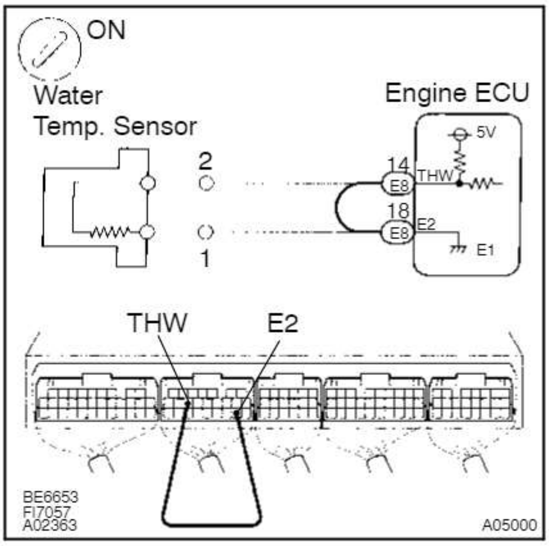

PREPARATION:

(a) Remove the glove compartment door.

(b) Connect between terminals THW and E2 of the engine ECU connector.

HINT:

Water temp. sensor connector is disconnected.

Before checking, do a visual and contact pressure check for the engine ECU connector (See page IN–19).

(c) Turn the ignition switch ON.

CHECK:

Read temperature value on the hand–held tester.

OK:

Temperature value: 140°C (284°F) or more

OK → **Open in harness between terminals E2 or THW, repair or replace harness.**

NG

Confirm good connection at engine ECU.
If OK, check and replace engine ECU.
(See page IN–19)

4 Check for short in harness and engine ECU.

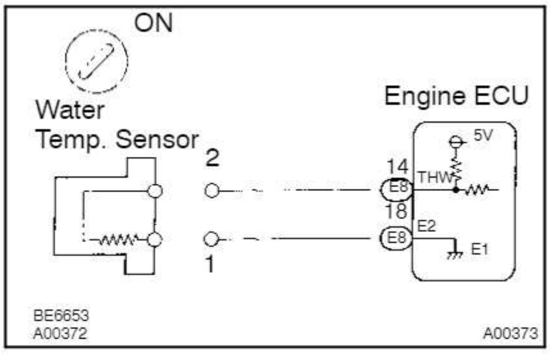

PREPARATION:

(a) Disconnect the water temp. sensor connector.

(b) Turn the ignition switch ON.

CHECK:

Read temperature value on the hand–held tester.

OK:

Temperature value: –40°C (–40°F)

OK **Replace water temp. sensor.**

NG

5 Check for short in harness or engine ECU.

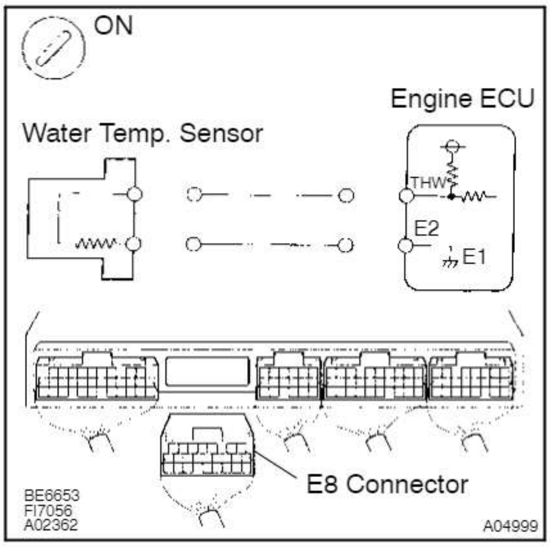

PREPARATION:

(a) Remove the glove compartment door.

(b) Disconnect the E8 connector of the engine ECU.

HINT:

Water temp. sensor connector is disconnected.

(c) Turn the ignition switch ON.

CHECK:

Read temperature value on the hand–held tester.

OK:

Temperature value: –40°C (–40°F)

OK **Repair or replace harness or connector.**

NG

Check and replace engine ECU (See page IN–19).

When not using hand–held tester

1	**Check voltage between terminals THW and E2 of engine ECU connector.**

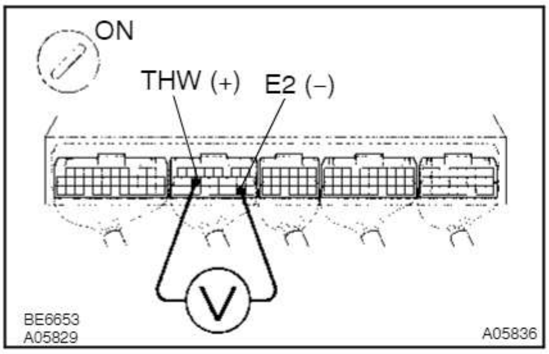

PREPARATION:

(a) Remove the glove compartment door.

(b) Turn ignition switch ON.

CHECK:

Measure voltage between terminals THW and E2 of engine ECU connector.

OK:

Water temperature	Voltage
20°C (68°F)	0.5 – 3.4 V
60°C (140°F)	0.2 – 1.0 V

OK **Check for intermittent problems (See page IN–19).**

NG

2	**Check water temp. sensor.**

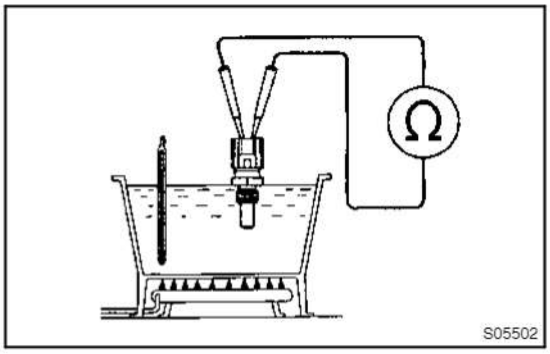

PREPARATION:

Disconnect the water temp. sensor connector.

CHECK:

Measure resistance between terminals.

OK:

Resistance is within acceptable zone on chart.

Water temperature	Resistance
20°C (68°F)	2 – 3 kΩ
80°C (176°F)	0.2 – 0.4 kΩ

NG **Replace water temp. sensor.**

OK

3	**Check for open and short in harness and connector between engine ECU and water temp. sensor (See page IN–19).**

NG → **Repair or replace harness or connector.**

OK

Check and replace engine ECU (See page IN–19).

DI3OZ–01

DTC P0120/41 Throttle Position Sensor Circuit Malfunction

CIRCUIT DESCRIPTION

Throttle position sensor is mounted on the throttle body and it has the 2 sensors to detect the throttle opening angle and the malfunction of the throttle position sensor's own.
The voltage applied to the terminals VTA and VTA2 of the engine ECU changes between 0 V and 5 V in proportion to the opening angle of the throttle valve.
The engine ECU judges the current opening angle of the throttle valve from these signals input from terminals VTA and VTA2, and the engine ECU controls the throttle motor to make the throttle valve angle properly in response to driving condition.
If this DTC is stored, the engine ECU shuts down the power for the throttle motor and the electromagnetic clutch, and the throttle valve is fully closed by the return spring.
However, the opening angle of the throttle valve can be controlled by the accelerator pedal through the throttle cable.

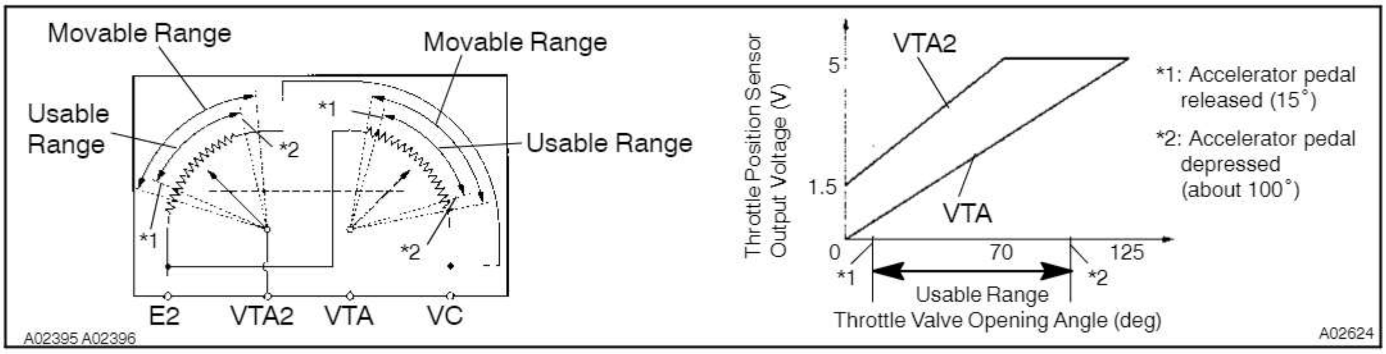

DTC No.	DTC Detecting Condition	Trouble Area
P0120/41	Conditions (a), (b), (c), (d) or (e) continues for 2.0 seconds: (a) VTA ≦ 0.2 V (b) VTA2 ≦ 0.5 V (c) VTA ≧ 4.8 V (d) When VTA ≧ 0.2 V and ≦ 2.0 V, and VTA2 ≧ 4.97 V (e) VTA–VTA2 ≦ 0.02 V, or VTA2–VTA ≦ 0.02 V	• Open or short in throttle position sensor circuit • Throttle position sensor • Engine ECU
	Condition (a) continues for 0.4 seconds: (a) VTA ≦ 0.2 V and VTA2 ≦ 0.5 V	

HINT:
After confirming DTC P0120/41 use the hand–held tester to confirm the throttle valve opening percentage.

Accelerator pedal position expressed as percentage and voltage				Trouble area
Accelerator pedal released		Accelerator pedal depressed		
THROTTLE POS	THROTTLE POS #2	THROTTLE POS	THROTTLE POS #2	
0 %	0 V	0 %	0 V	VC line open
0 %	2.0 – 2.9 V	0 %	4.7 – 5.1 V	VTA line open or grand short
8 – 20 %	0 V	64 – 96 %	0 V	VTA2 line open or grand short
100 %	5 V	100 %	5 V	E2 line open

WIRING DIAGRAM

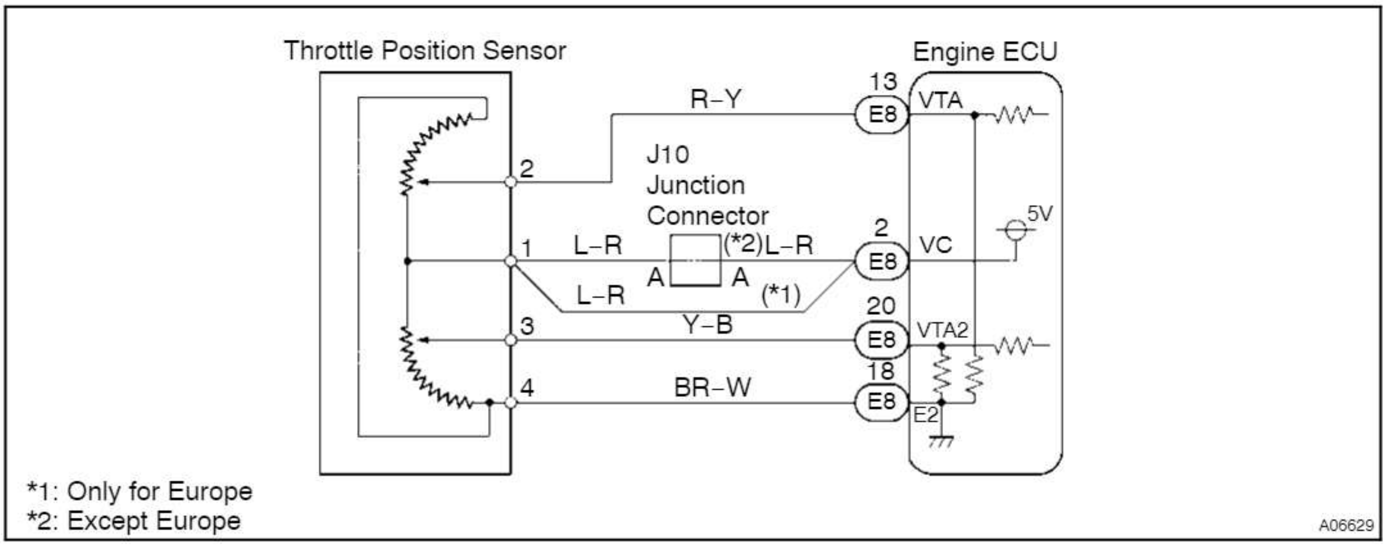

*1: Only for Europe
*2: Except Europe

INSPECTION PROCEDURE

HINT:

- If DTC P0110/24 (Intake Air Temp. Circuit Malfunction), P0115/22 (Water Temp. Circuit Malfunction), P0120/41 (Throttle Position Sensor Circuit Malfunction), P1120/19 (Accelerator Pedal Position Sensor Circuit Malfunction) are output simultaneously, E2 (Sensor Ground) may be open.
- Read freeze frame data using hand–held tester. Because freeze frame records the engine conditions when the malfunction is detected, when troubleshooting it is useful for determining whether the vehicle was running or stopped, the engine warmed up or not, the air–fuel ratio lean or rich, etc. at the time of the malfunction.

When using hand–held tester

1	**Connect hand–held tester, read throttle valve opening percentage.**

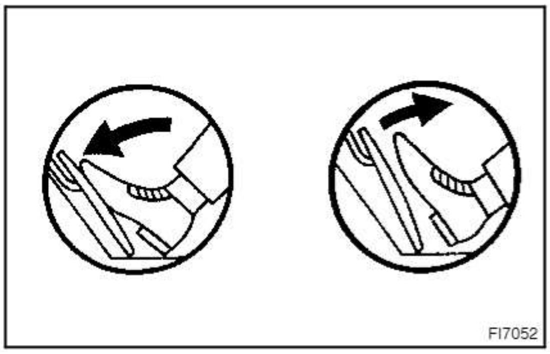

PREPARATION:

(a) Connect the hand–held tester to DLC3.

(b) Turn the ignition switch ON and switch the hand–held tester main switch ON.

CHECK:

Read the throttle valve opening percentage for VTA circuit and read the voltage for VTA2 circuit.

OK:

Accelerator pedal	Throttle valve opening position expressed as percentage (VTA)	Voltage (VTA2)
Released	8 – 20 %	2.0 – 2.9 V
Depressed	64 – 96 %	4.7 – 5.1 V

OK	**Check and replace engine ECU (See page IN–19).**

NG

2 Check voltage between terminals VC and E2 of engine ECU connector.

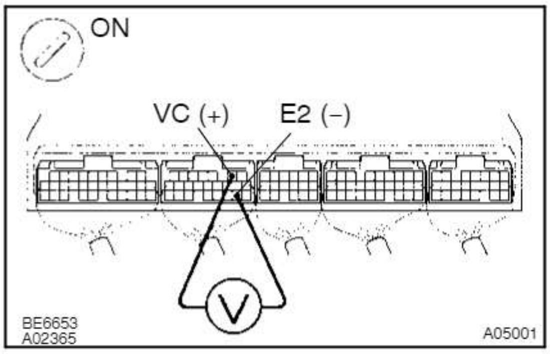

PREPARATION:

(a) Remove the glove compartment door.

(b) Turn the ignition switch ON.

CHECK:

Measure voltage between terminals VC and E2 of the engine ECU
connector.

OK:

Voltage: 4.5 – 5.5 V

NG **Check and replace engine ECU (See page IN–19).**

OK

3 Check voltage between terminals VTA, VTA2 and E2 of engine ECU connector.

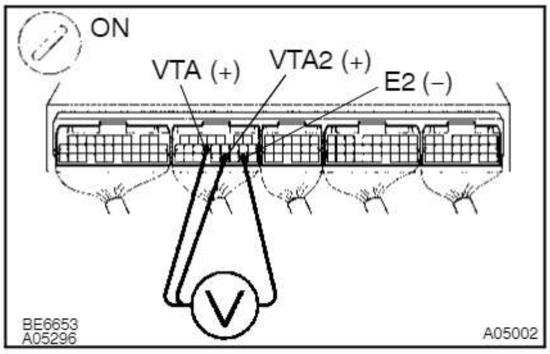

PREPARATION:

(a) Remove the glove compartment door.

(b) Turn the ignition switch ON.

CHECK:

Measure voltage between terminals VTA, VTA2 and E2 of the engine ECU connector.

OK:

Accelerator pedal	Voltage	
	VTA	VTA2
Released	0.4 – 1.0 V	2.0 – 2.9 V
Depressed	3.2 – 4.8 V	4.7 – 5.1 V

NG **Check and replace engine ECU (See page IN–19).**

OK

4	**Check throttle position sensor (See page FI–40).**

NG → **Replace throttle position sensor (See page FI–40).**

OK

Check for open and short in harness and connector between engine ECU and throttle position sensor (VC, VTA, VTA2, E2 line) (See page IN–19).

When not using hand–held tester

1	**Check voltage between terminals VC and E2 of engine ECU connector.**

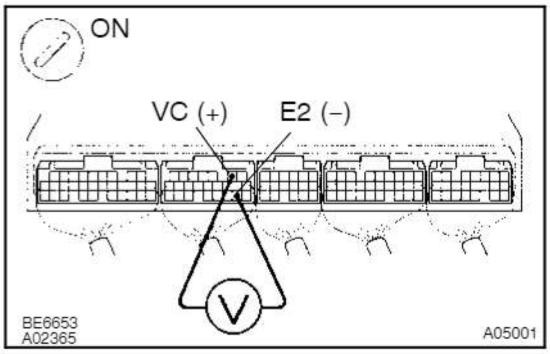

PREPARATION:

(a) Remove the glove compartment door.

(b) Turn the ignition switch ON.

CHECK:

Measure voltage between terminals VC and E2 of the engine ECU connector.

OK:

Voltage: 4.5 – 5.5 V

NG → **Check and replace engine ECU (See page IN–19).**

OK

2 Check voltage between terminals VTA, VTA2 and E2 of engine ECU connector.

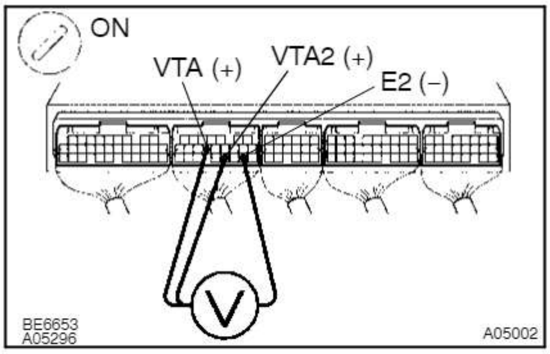

PREPARATION:

(a) Remove the glove compartment door.

(b) Turn the ignition switch ON.

CHECK:

Measure voltage between terminals VTA, VTA2 and E2 of the engine ECU connector.

OK:

Accelerator pedal	Voltage	
	VTA	VTA2
Released	0.4 – 1.0 V	2.0 – 2.9 V
Depressed	3.2 – 4.8 V	4.7 – 5.1 V

OK → **Check and replace engine ECU (See page IN–19).**

NG

3 Check throttle position sensor (See page FI–40).

NG → **Replace throttle position sensor (See page FI–40).**

OK

Check for open and short in harness and connector between engine ECU and throttle position sensor (VC, VTA, VTA2, E2 line) (See page IN–19).

DTC	P0121/41	Throttle Position Sensor Circuit Range/Performance Problem

CIRCUIT DESCRIPTION

Refer to DTC P0120/41 (Throttle Position Sensor Circuit Malfunction) on page DI–45.

DTC No.	DTC Detecting Condition	Trouble Area
P0121/41	Condition (a) continue for 2.0 seconds: (a) Difference between VTA and VTA2 is out of threshold	• Throttle position sensor • Engine ECU

INSPECTION PROCEDURE

HINT:

Read freeze frame data using hand–held tester. Because freeze frame records the engine conditions when the malfunction is detected, when troubleshooting it is useful for determining whether the vehicle was running or stopped, the engine warmed up or not, the air–fuel ratio lean or rich, etc. at the time of the malfunction.

Replace throttle position sensor (See page FI–45).

DI3P1–02

DTC P0130/21 Oxygen Sensor Circuit Malfunction (Bank 1 Sensor 1)

DTC P0150/28 Oxygen Sensor Circuit Malfunction (Bank 2 Sensor 1)

CIRCUIT DESCRIPTION

To obtain a high purification rate for the CO, HC and NOx components of the exhaust gas, a three–way catalytic converter is used, but for the most efficient use of the three–way catalytic converter, the air–fuel ratio must be precisely controlled so that it is always close to the stoichiometric air–fuel ratio.

The oxygen sensor has the characteristic whereby its output voltage changes suddenly in the vicinity of the stoichiometric air–fuel ratio. This characteristic is used to detect the oxygen concentration in the exhaust gas and provide feedback to the computer for control of the air–fuel ratio.

When the air–fuel ratio becomes LEAN, the oxygen concentration in the exhaust increases and the oxygen sensor informs the engine ECU of the LEAN condition (small electromotive force: 0 V).

When the air–fuel ratio is RICHER than the stoichiometric air–fuel ratio the oxygen concentration in the exhaust gas is reduced and the oxygen sensor informs the engine ECU of the RICH condition (large electromotive force: 1 V). The engine ECU judges by the electromotive force from the oxygen sensor whether the air–fuel ratio is RICH or LEAN and controls the injection time accordingly. However, if malfunction of the oxygen sensor causes output of abnormal electromotive force, the engine ECU is unable to perform accurate air–fuel ratio control.

The oxygen sensors include a heater which heats the Zirconia element. The heater is controlled by the engine ECU. When the intake air volume is low (the temperature of the exhaust gas is low) current flows to the heater to heat the sensor for accurate oxygen concentration detection.

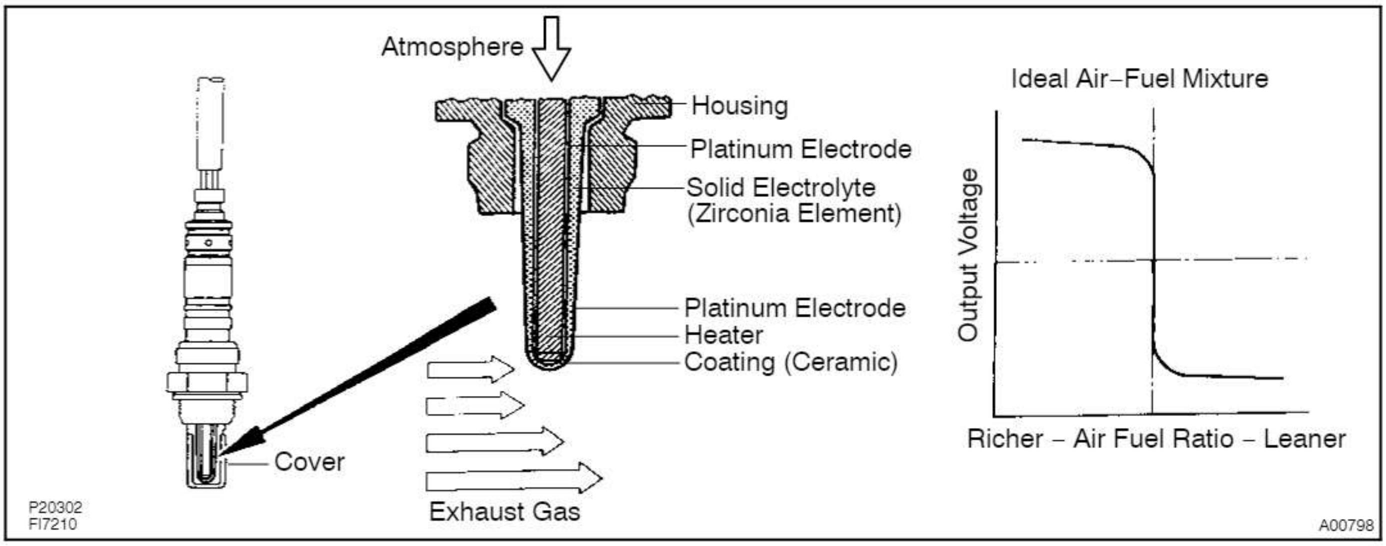

DTC No.	DTC Detecting Condition	Trouble Area
P0130/21 P0150/28	After the engine is warmed up, oxygen sensor signal voltage is reduced to between 0.35 V and 0.70 V for 60 sec. with under conditions (a) and (b): (a) Engine speed: 4,000 rpm or less (b) Vehicle speed: 100 km/h (62 mph) or less	• Oxygen sensor • Fuel trim malfunction

HINT:

Bank 1 refers to bank that includes cylinder No.1.

Bank 2 refers to bank that does not include cylinder No.1.

Sensor 1 refers to the sensor closer to the engine body.

The oxygen sensor's output voltage and the short–term fuel trim value can be read using the hand–held tester.

WIRING DIAGRAM

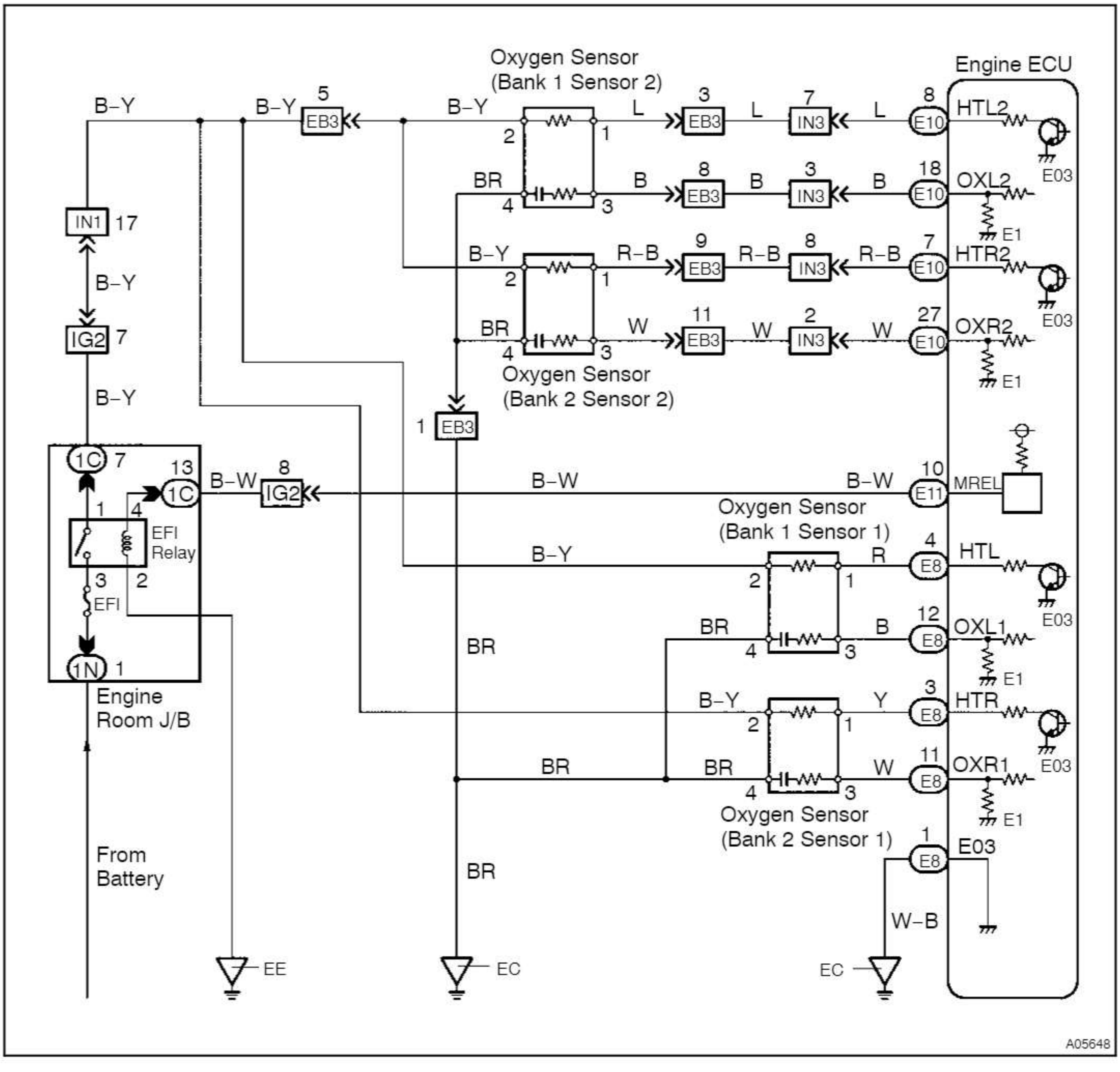

CONFIRMATION DRIVING PATTERN

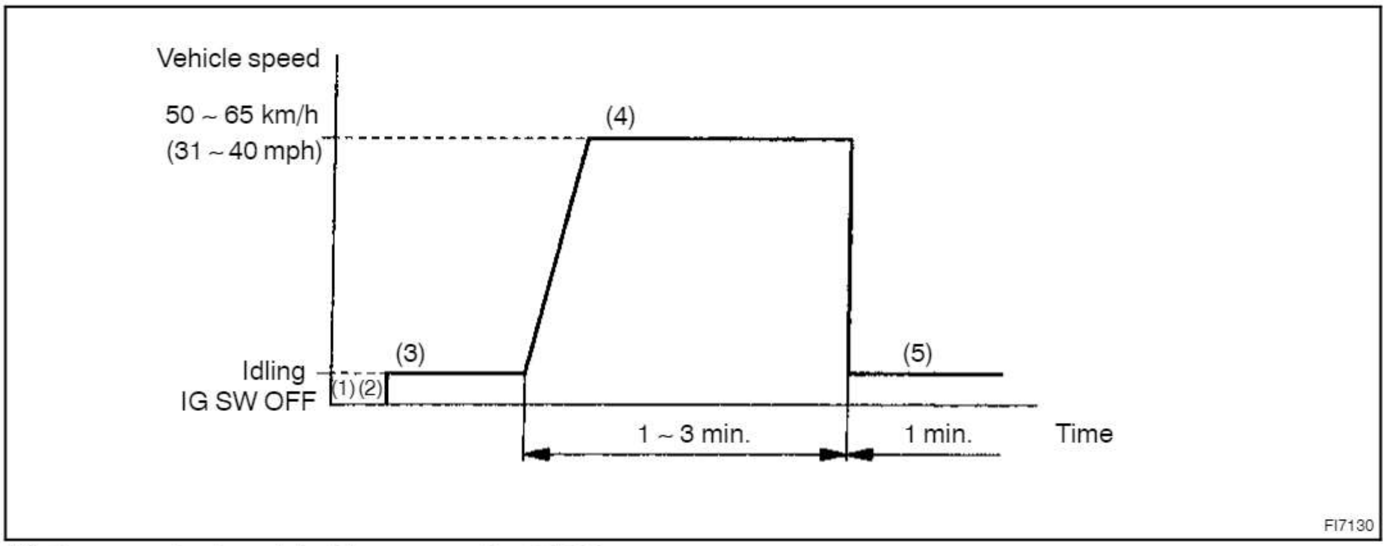

(1) Connect the hand–held tester to the DLC3.
(2) Switch the hand–held tester from normal mode to check (test) mode (See page DI–4).
(3) Start the engine and warm it up with all accessory switches OFF.
(4) Drive the vehicle at 50 ~ 65 km/h (31 ~ 40 mph) for 1 ~ 3 min. to warm up the oxygen sensor.
(5) Let the engine idle for 1 min.
(6) Perfom steps (3) to (5) three times.

HINT:

If a malfunction exists, the CHK ENG will be indicated on the multiinformation display during step (6).

NOTICE:

If the conditions in this test are not strictly followed, detection of the malfunction will not be possible. If you do not have a hand–held tester, turn the ignition switch OFF after performing steps (3) to (6), then perform steps (3) to (6) again.

INSPECTION PROCEDURE

When using hand–held tester

HINT:

Read freeze frame data using hand–held tester. Because freeze frame records the engine conditions when the malfunction is detected, when troubleshooting it is useful for determining whether the vehicle was running or stopped, the engine warmed up or not, the air–fuel ratio lean or rich, etc. at the time of the malfunction.

1	**Check for open and short in harness and connector between engine ECU and oxygen sensor (See page IN–19).**

NG | **Repair or replace harness or connector.**

OK

2 Check for oxygen sensor data.

PREPARATION:

(a) Connect the hand–held tester to the DLC3.

(b) Warm up the engine to normal operating temperature.

CHECK:

Read the oxygen sensor output voltage and short–term fuel trim.

RESULT:

Pattern	Oxygen sensor output voltage	Short–term fuel trim
1	Lean condition (Changes at 0.55 V or less)	Changes at about +20 %
2	Rich condition (Changes at 0.35 V or more)	Changes at about –20 %
3	Except 1 and 2	

1, 2 **Check fuel trim system (See page DI–61).**

3

3 Check output voltage of oxygen sensor during idling.

PREPARATION:

Warm up the oxygen sensor with the engine at 2,500 rpm for approx. 90 sec.

CHECK:

Use the hand–held tester read the output voltage of the oxygen sensor during idling.

OK:

Oxygen sensor output voltage:
Alternates repeatedly between less than 0.35 V and more than 0.70 V (See the following table).

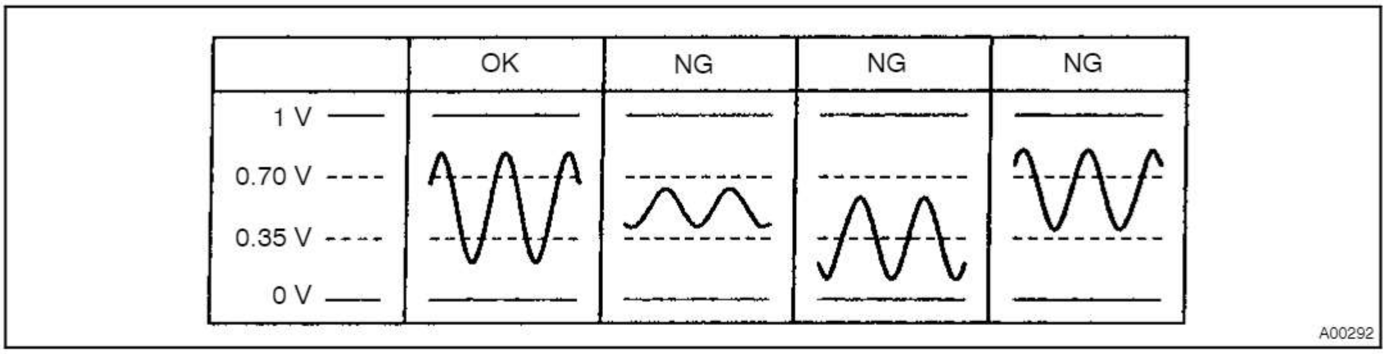

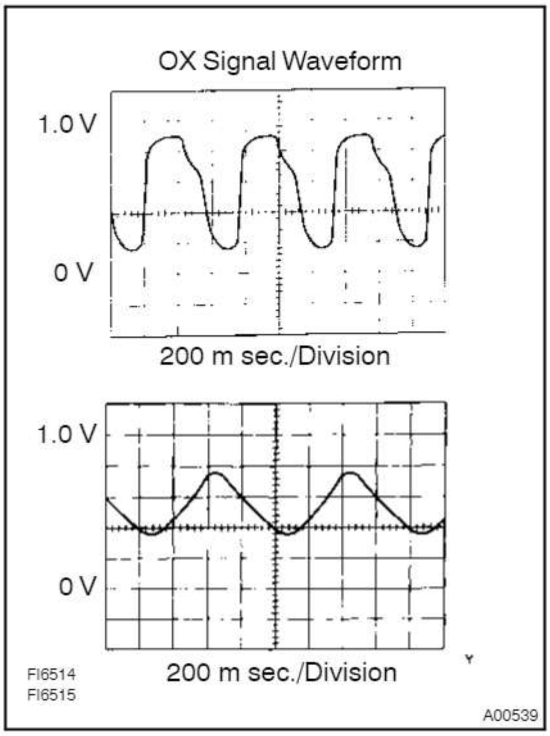

Reference: INSPECTION USING OSCILLOSCOPE

With the engine racing (4,000 rpm) measure waveform between terminals OXL1, OXR1 and E1 of the engine ECU .

HINT:

- The correct waveform is as shown oscillating between approx. 0.1 V and 0.9 V.
- If the oxygen sensor has deteriorated, the amplitude of the voltage will be reduced as shown on the left.

OK **Perform confirmation driving pattern.**

NG

Replace oxygen sensor.

When not using hand–held tester

1	**Are there any other codes (besides code 21 and 28) being output?**

YES **Go to relevant DTC chart (See page DI–17).**

NO

Replace oxygen sensor.

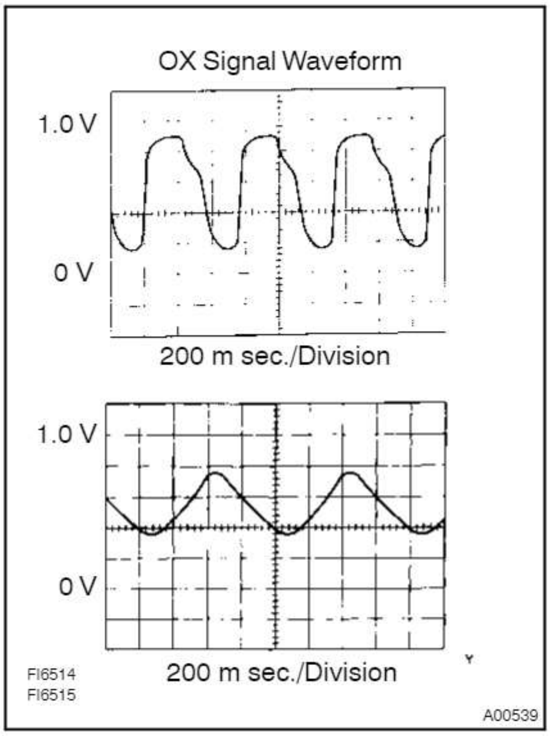

Reference: INSPECTION USING OSCILLOSCOPE

With the engine racing (4,000 rpm) measure waveform between terminals OXL1, OXR1 and E1 of the engine ECU .

HINT:

- The correct waveform is as shown oscillating between approx. 0.1 V and 0.9 V.
- If the oxygen sensor has deteriorated, the amplitude of the voltage will be reduced as shown on the left.

DI3P2–01

DTC	P0135/21	Oxygen Sensor Heater Circuit Malfunction (Bank 1 Sensor 1)

DTC	P0141/21	Oxygen Sensor Heater Circuit Malfunction (Bank 1 Sensor 2)

DTC	P0155/28	Oxygen Sensor Heater Circuit Malfunction (Bank 2 Sensor 1)

DTC	P0161/28	Oxygen Sensor Heater Circuit Malfunction (Bank 2 Sensor 2)

CIRCUIT DESCRIPTION

Refer to DTC P0130/21, P0150/28 (Oxygen Sensor Circuit Malfunction (Bank 1 Sensor 1) (Bank 2 Sensor 1)) on page DI–51.

DTC No.	DTC Detecting Condition	Trouble Area
P0135/21 P0141/21 P0155/28 P0161/28	Open or short in heater circuit of oxygen sensor 0.5 sec. or more	• Open or short in heater circuit of oxygen sensor • Oxygen sensor heater • Engine ECU

HINT:

- Bank 1 refers to bank that includes cylinder No.1.
- Bank 2 refers to bank that does not include cylinder No.1.
- Sensor 1 refers to the sensor closer to the engine body.
- Sensor 2 refers to the sensor farther away from the engine body.

WIRING DIAGRAM

Refer to DTC P0130/21, P0150/28 (Oxygen Sensor Circuit Malfunction (Bank 1 Sensor 1) (Bank 2 Sensor 1)) on page DI–51 for the WIRING DIAGRAM.

INSPECTION PROCEDURE

HINT:

Read freeze frame data using hand–held tester. Because freeze frame records the engine conditions when the malfunction is detected, when troubleshooting it is useful for determining whether the vehicle was running or stopped, the engine warmed up or not, the air–fuel ratio lean or rich, etc. at the time of the malfunction.

1	**Check voltage between terminals HTR, HTR2, HTL, HTL2 of engine ECU connector and body ground.**

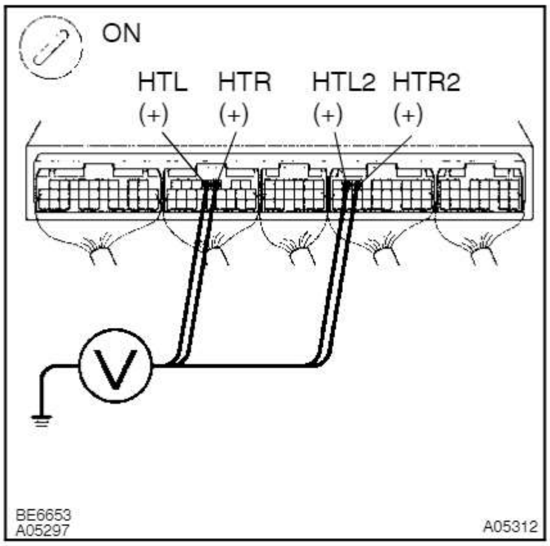

PREPARATION:

(a) Remove the glove compartment door.

(b) Turn the ignition switch ON.

CHECK:

Measure voltage between terminals HTR, HTR2, HTL, HTL2 of the engine ECU connector and body ground.

HINT:

- Connect terminal HTR to bank 2 sensor 1.
- Connect terminal HTR2 to bank 2 sensor 2.
- Connect terminal HTL to bank 1 sensor 1.
- Connect terminal HTL2 to bank 1 sensor 2.

OK:

Voltage: 9 – 14 V

OK	**Check and replace engine ECU (See page IN–19).**

NG

2	**Check resistance of oxygen sensor heater (See page FI–71).**

NG	**Replace oxygen sensor.**

OK

Check and repair harness or connector between main relay and oxygen sensor and engine ECU (See page IN–19).

DI3P3–01

DTC P0136/27 Oxygen Sensor Circuit Malfunction (Bank 1 Sensor 2)

DTC P0156/29 Oxygen Sensor Circuit Malfunction (Bank 2 Sensor 2)

CIRCUIT DESCRIPTION

Refer to DTC P0130/21, P0150/28 (Oxygen Sensor Circuit Malfunction (Bank 1 Sensor1) (Bank 2 Sensor 1)) on page DI–51.

DTC No.	DTC Detecting Condition	Trouble Area
P0136/27 P0156/29	Voltage output of the oxygen sensor (bank 1 sensor 2, bank 2 sensor 2) remains at 0.4 V or more or 0.5 V or less when the after the engine is warmed up and under conditions (a) and (b): (a) Vehicle speed: 100 km/h (62 mph) (b) Engine speed: 1,500 rpm	• Oxygen sensor

HINT:

- Bank 1 refers to bank that includes cylinder No.1.
- Bank 2 refers to bank that does not include cylinder No.1.
- Sensor 2 refers to the sensor farther away from the engine body.

WIRING DIAGRAM

Refer to DTC P0130/21, P0150/28 (Oxygen Sensor Circuit Malfunction (Bank 1 Sensor1) (Bank 2 Sensor 1)) on page DI–51 for the WIRING DIAGRAM.

INSPECTION PROCEDURE

When using hand–held tester

HINT:

Read freeze frame data using hand–held tester. Because freeze frame records the engine conditions when the malfunction is detected, when troubleshooting it is useful for determining whether the vehicle was running or stopped, the engine warmed up or not, the air–fuel ratio lean or rich, etc. at the time of the malfunction.

1	**Are there any other codes (besides DTC P0136 or P0156) being output?**

YES → **Go to relevant DTC chart (See page DI–17).**

NO

2	**Check for open and short in harness and connector between engine ECU and oxygen sensor (See page IN–19).**

NG → **Repair or replace harness or connector.**

OK

3	**Check the output voltage of oxygen sensor (bank 1, 2 sensor 2).**

PREPARATION:

(a) Connect the hand–held tester to the DLC3.
(b) After warming up the engine, race engine at 2,500 rpm for 3 min.

CHECK:

Read voltage output of oxygen sensor (bank 1 sensor 2, bank 2 sensor 2) when engine suddenly raced.

HINT:

Perform quick racing to 4,000 rpm 3 min. using accelerator pedal.

OK:

Oxygen sensor output voltage: Alternates from 0.4 V or less to 0.5 V or more.

OK → **Check that each connector is properly connected.**

NG

Replace oxygen sensor.

When not using hand–held tester

1	**Are there any other codes (besides code 27 or 29) being output?**

YES → **Go to relevant DTC chart (See page DI–17).**

NO

Replace oxygen sensor.

DTC	P0171/25	Fuel Trim System too Lean (Air–Fuel Ratio Lean Malfunction, Bank 1)

DTC	P0174/25	Fuel Trim System too Lean (Air–Fuel Ratio Lean Malfunction, Bank 2)

CIRCUIT DESCRIPTION

Fuel trim refers to the feedback compensation value compared against the basic injection time. Fuel trim includes short–term fuel trim and long–term fuel trim.

Short–term fuel trim is the short–term fuel compensation used to maintain the air–fuel ratio at its ideal theoretical value. The signal from the heated oxygen sensor indicates whether the air–fuel ratio is RICH or LEAN compared to the ideal theoretical value, triggering a reduction in fuel volume if the air–fuel ratio is rich, and an increase in fuel volume if it is lean.

Long–term fuel trim is overall fuel compensation carried out long–term to compensate for continual deviation of the short–term fuel trim form the central value due to individual engine differences, wear over time and changes in the usage environment.

If both the short–term fuel trim and long–term fuel trim are LEAN or RICH beyond a certain value, it is detected as a malfunction.

DTC No.	DTC Detecting Condition	Trouble Area
P0171/25	When the air fuel ratio feedback is stable after engine warming up, the fuel trim is considerably in error on the LEAN side (2 trip detection logic)	• Gas leakage on exhaust system • Air intake (hose loose) • Fuel line pressure • Injector blockage • Oxygen sensor (bank 1 sensor 1) malfunction • Air flow meter • Water temp. sensor
P0174/25	When the air fuel ratio feedback is stable after engine warming up, the fuel trim is considerably in error on the LEAN side (2 trip detection logic)	• Gas leakage on exhaust system • Fuel line pressure • Injector leak, blockage • Oxygen sensor (bank 2 sensor 1) malfunction • Air flow meter • Water temp. sensor

HINT:

- When DTC P0171/25 and DTC P0174/25 is recorded, the actual air–fuel ratio is on the LEAN side.
- If the vehicle runs out of fuel, the air–fuel ratio is LEAN and DTC P0171/25 and DTC P0174/25 is recorded.
- If the total of the short–term fuel trim value and long–term fuel trim value is within ± 25 %, the system is functioning normally.

INSPECTION PROCEDURE

HINT:

Read freeze frame data using hand–held tester. Because freeze frame records the engine conditions when the malfunction is detected, when troubleshooting it is useful for determining whether the vehicle was running or stopped, the engine warmed up or not, the air–fuel ratio lean or rich, etc. at the time of the malfunction.

When using hand–held tester

1 **Ask customer whether vehicles runs out of fuel.**

YES **DTC P0171/25 was recorded because the vehicle runs out of fuel.**

NO

2 **Check air induction system (See page FI–1).**

NG **Repair or replace.**

OK

3 **Check for oxygen sensor (bank 1, 2 sensor 1) data.**

PREPARATION:

(a) Connect the hand–held tester to the DLC3.

(b) Warm up the engine to normal operating temperature.

CHECK:

Read the oxygen sensor (bank 1, 2 sensor 1) output voltage and short–term fuel trim.

HINT:

Read the values for the same bank.

RESULT:

Pattern	Oxygen sensor output voltage	Short–term fuel trim
1	Lean condition (Changes at 0.55 V or less)	Changes at about +20 %
2	Rich condition (Changes at 0.35 V or more)	Changes at about –20 %
3	Except 1 and 2	

3 **Check for oxygen sensor (bank 1, 2 sensor 1) (See page DI–51).**

1, 2

4 **Check fuel pressure (See page FI–7).**

NG **Check and repair fuel pump, pressure regulator, fuel pipe line and filter (See page FI–7).**

OK

5 **Check injector injection (See page FI–29).**

NG **Replace injector.**

OK

6 **Check air flow meter and water temp. sensor (See page DI–27 and DI–39).**

NG **Repair or replace.**

OK

7 **Check for spark and ignition (See page IG–1).**

NG **Repair or replace.**

OK

8	**Check gas leakage on exhaust system.**

NG → **Repair or replace.**

OK

Check and replace engine ECU (See page IN–19).

When not using hand–held tester

1	**Check air induction system (See page FI–1).**

NG → **Repair or replace.**

OK

2	**Check fuel pressure (See page FI–7).**

NG → **Check and repair fuel pump, fuel pipe line and filter (See page FI–7).**

OK

3	**Check injector injection (See page FI–29).**

NG → **Replace injector.**

OK

4	**Check air flow meter (See page DI–27).**

NG **Repair or replace.**

OK

5	**Check water temp. sensor (See page DI–39).**

NG **Repair or replace.**

OK

6	**Check for spark and ignition (See page IG–1).**

NG **Repair or replace.**

OK

7	**Check gas leakage on exhaust system.**

NG **Repair or replace.**

OK

8	**Does malfunction disappear when a good oxygen sensor installed?**

YES → **Repair oxygen sensor.**

NO

Check and replace engine ECU
(See page IN–19).

DI3P5–02

DTC	P0325/52	Knock Sensor 1 Circuit Malfunction

DTC	P0330/55	Knock Sensor 2 Circuit Malfunction

CIRCUIT DESCRIPTION

Knock sensors are fitted one to the right bank and left bank of the cylinder block to detect engine knocking. This sensor contains a piezoelectric element which generates a voltage when it becomes deformed, which occurs when the cylinder block vibrates due to knocking. If engine knocking occurs, ignition timing is retarded to suppress it.

DTC No.	DTC Detecting Condition	Trouble Area
P0325/52	No knock sensor 1 signal to engine ECU with engine speed between 1,700 rpm and 5,400 rpm	• Open or short in knock sensor 1 circuit • Knock sensor 1 (looseness) • Engine ECU
P0330/55	No knock sensor 2 signal to engine ECU with engine speed between 1,700 rpm and 5,400 rpm	• Open or short in knock sensor 2 circuit • Knock sensor 2 (looseness) • Engine ECU

WIRING DIAGRAM

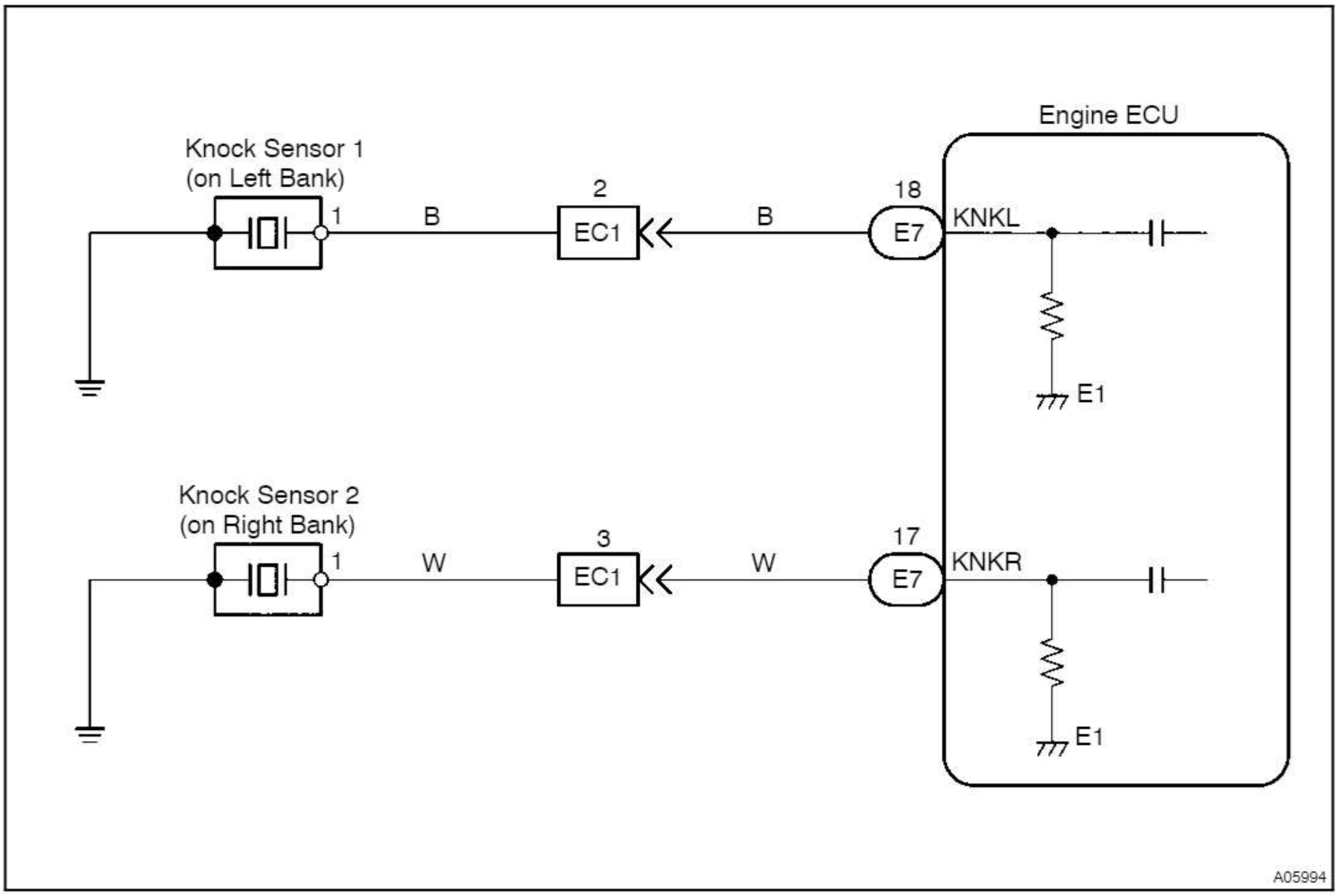

INSPECTION PROCEDURE

HINT:

- DTC P0325/52 is for the left bank knock sensor circuit.
- DTC P0330/55 is for the right bank knock sensor circuit.
- Read freeze frame data using hand–held tester. Because freeze frame records the engine conditions when the malfunction is detected, when troubleshooting it is useful for determining whether the vehicle was running or stopped, the engine warmed up or not, the air–fuel ratio lean or rich, etc. at the time of the malfunction.

When using hand–held tester

1	**Connect hand–held tester and check knock sensor circuit.**

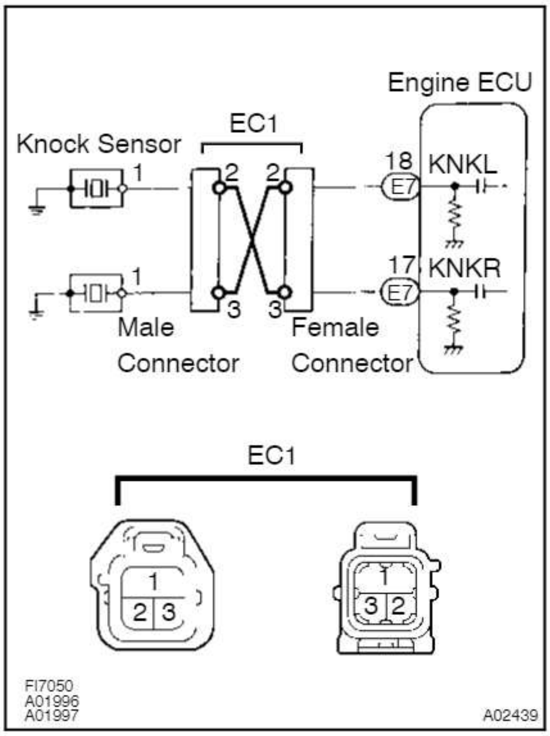

PREPARATION:

(a) Connect the hand–held tester to the DLC3.
(b) Disconnect the wire to wire connector EC1.
(c) Connect the terminals of the disconnected EC1 male connector and EC1 female as follows.

Male connector ↔ Female connector
Terminal 1 ↔ Terminal 2
Terminal 2 ↔ Terminal 1

(d) Turn ignition switch ON and switch the hand–held tester main switch ON.
(e) After the engine is warmed up, perform quick racing to 4,000 rpm three times.

CHECK:

Check the DTC.

RESULT:

Type I	DTC same as when vehicle brought in. P0325/52 → P0325/52 or P0330/55 → P0330/55
Type II	DTC different to when vehicle brought in. P0325/52 → P0330/55 or P0330/55 → P0325/52

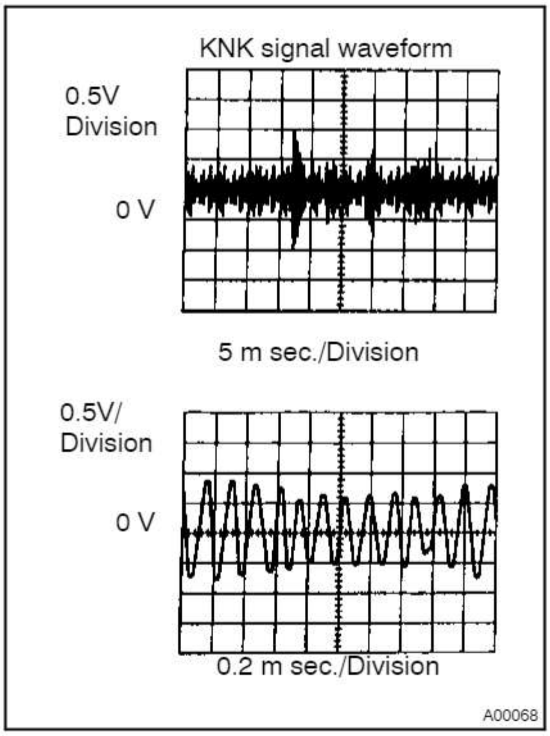

Reference: INSPECTION USING OSCILLOSCOPE

- With the engine racing (4,000 rpm) measure between terminal KNK1, KNK2 of the engine ECU connector and body ground.

HINT:

The correct waveforms are as shown.

- Spread the time on the horizontal axis, and confirm that period of the wave is 0.13 m sec.
  (Normal mode vibration frequency of knock sensor: 8.1 kHz)

HINT:

If normal mode vibration frequency is not 8.1 kHz, the sensor is malfunctioning.

Type II **Go to step 3.**

Type I

2 **Check for open and short in harness and connector between EC1 connector and engine ECU (See page IN–19).**

NG **Repair or replace harness or connector.**

OK

Check and replace engine ECU (See page IN–19).

3 **Check for open and short in harness and connector between EC1 connector and knock sensor (See page IN–19).**

HINT:
- If DTC P0325/52 has changed to P0330/55, check the knock sensor circuit on the left bank side.
- If DTC P0330/55 has changed to P0325/52, check the knock sensor circuit on the right bank side.

NG **Repair or replace harness or connector.**

OK

Replace knock sensor.

When not using hand–held tester

1 **Check continuity between terminal KNKR, KNKL of engine ECU connector and body ground.**

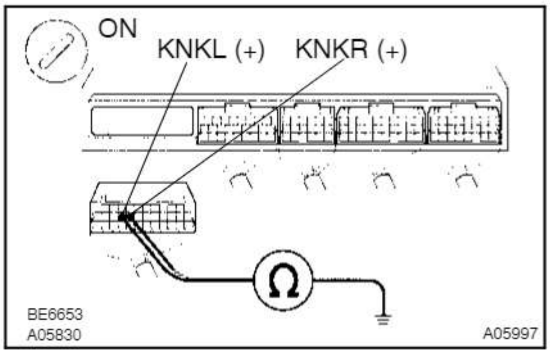

PREPARATION:

(a) Remove the glove compartment door.

(b) Disconnect the E7 connector of engine ECU.

CHECK:

Measure resistance between terminal KNKR, KNKL of engine ECU connector and body ground.

OK:

Resistance: 1 MΩ or higher

OK **Go to step 3.**

NG

2	**Check knock sensor.**

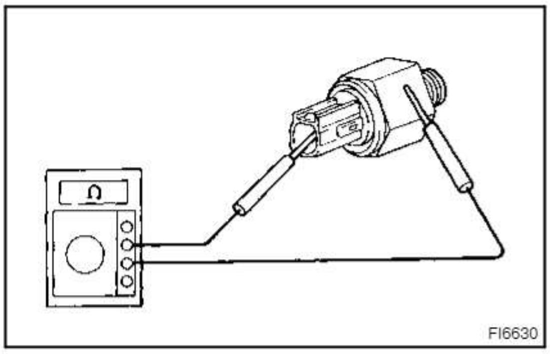

PREPARATION:

Disconnect knock sensor connector.

CHECK:

Measure resistance between the knock sensor terminal and body.

OK:

Resistance: 1 MΩ or higher

NG → **Replace knock sensor.**

OK

3	**Check for open and short in harness and connector between engine ECU and knock sensor (See page IN–19).**

NG → **Repair or replace harness or connector.**

OK

4	**Does malfunction disappear when a good knock sensor is installed?**

YES → **Replace knock sensor.**

NO

Check and replace engine ECU (See page IN–19).

DI3P6–01

DTC	P0335/12, 13	Crankshaft Position Sensor Circuit Malfunction

CIRCUIT DESCRIPTION

The crankshaft position sensor, which detects the engine speed and crankshaft angle signal (NE signal), has been installed on the oil pump body.

The NE signal plate has 34 teeth. The NE signal sensor generates 34 signals of every engine revolution. The engine ECU detects the standard crankshaft angle based on the G2 signals, and the actual crankshaft angle and the engine speed by the NE signals.

DTC No.	DTC Detecting Condition	Trouble Area
P0335/12, 13	No crankshaft position sensor signal to engine ECU during cranking	• Open or short in crankshaft position sensor circuit • Crankshaft position sensor • Starter • Engine ECU
	No crankshaft position sensor signal to engine ECU with engine speed 600 rpm or more	

WIRING DIAGRAM

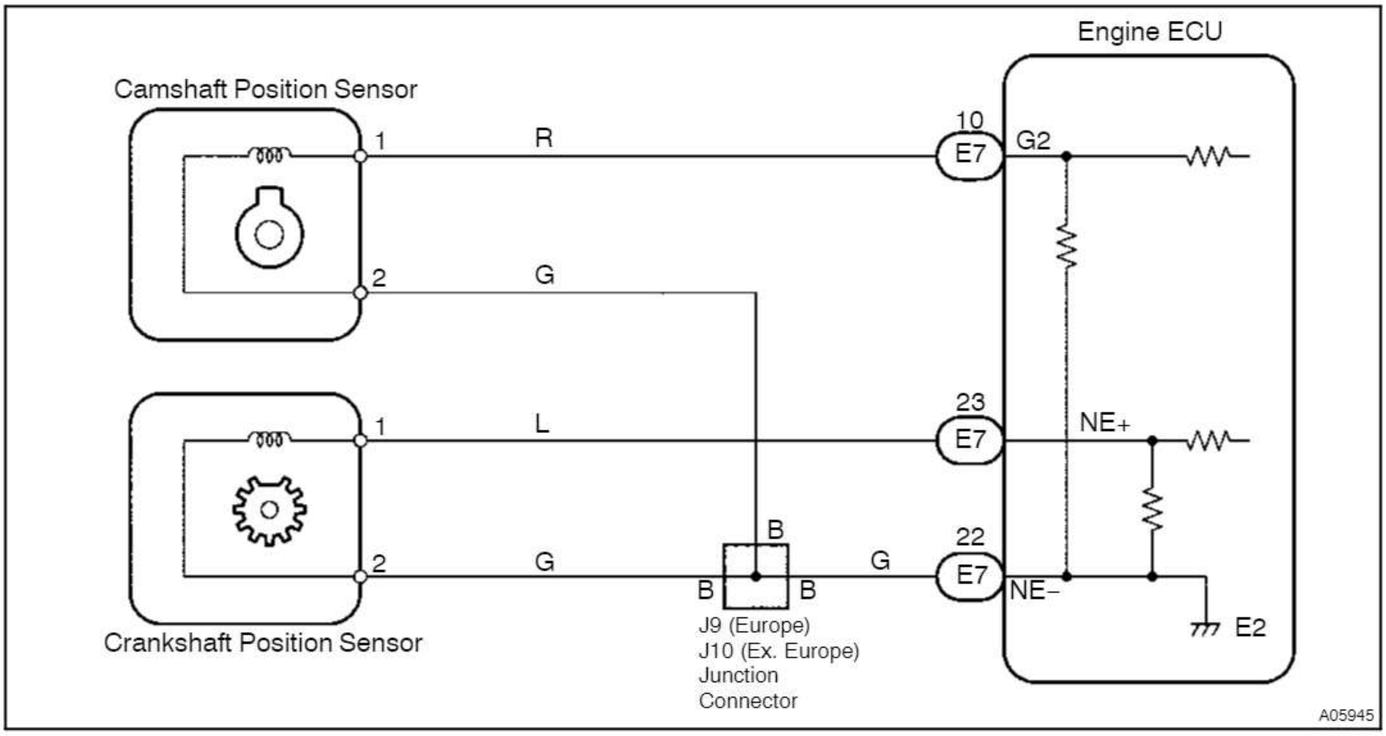

INSPECTION PROCEDURE

HINT:

- Perform troubleshooting of DTC P0335/12, 13 first. If no trouble is found, troubleshoot the following mechanical systems.
- Read freeze frame data using hand–held tester. Because freeze frame records the engine conditions when the malfunction is detected, when troubleshooting it is useful for determining whether the vehicle was running or stopped, the engine warmed up or not, the air–fuel ratio lean or rich, etc. at the time of the malfunction.

1	**Check resistance of crankshaft position sensor (See page IG–1).**

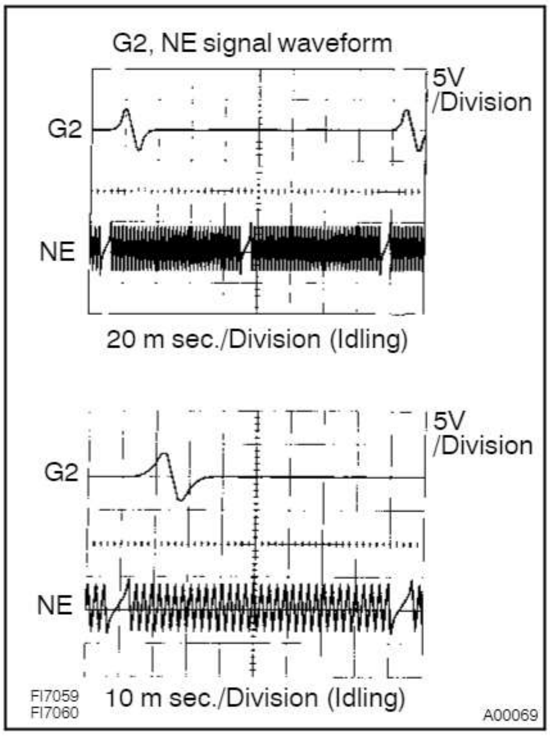

Reference: INSPECTION USING OSCILLOSCOPE

During cranking or idling, check between terminals G2 and NE–, NE and NE– of the engine ECU connector.

HINT:

The correct waveforms are as shown.

NG **Replace crankshaft position sensor.**

OK

2	**Check for open and short in harness and connector between engine ECU and crankshaft position sensor (See page IN–19).**

NG **Repair or replace harness or connector.**

OK

3	Inspect sensor installation and teeth of signal plate.

NG Tighten sensor. Replace signal plate.

OK

Check and replace engine ECU
(See page IN–19).

DI3P7–01

DTC P0340/12 Camshaft Position Sensor Circuit Malfunction

CIRCUIT DESCRIPTION

Camshaft position sensor (G2 signal) consist of a signal plate and pickup coil.
The G2 signal plate has 1 tooth, on its outer circumference and is mounted on the left bank camshafts.
When the camshafts rotate, the protrusion on the signal plate and the air gap on the pickup coil change, causing fluctuations in the magnetic field and generating an electromotive force in the pickup coil.
The NE signal plate has 34 teeth and is mounted on the crankshaft. The NE signal sensor generates 34 signals for every engine revolution. The engine ECU detects the standard crankshaft angle based on the G2 signal and the actual crankshaft angle and the engine speed by the NE signals.

DTC No.	DTC Detecting Condition	Trouble Area
P0340/12	No camshaft position sensor signal to engine ECU during cranking	• Open or short in camshaft position sensor circuit • Camshaft position sensor • Starter • Engine ECU
	No camshaft position sensor signal to engine ECU with engine speed 600 rpm or more	

WIRING DIAGRAM

Refer to DTC P0335/12, 13 (Crankshaft Position Sensor Circuit Malfunction) on page DI–72 for the WIRING DIAGRAM.

INSPECTION PROCEDURE

HINT:
Read freeze frame data using hand–held tester. Because freeze frame records the engine conditions when the malfunction is detected, when troubleshooting it is useful for determining whether the vehicle was running or stopped, the engine warmed up or not, the air–fuel ratio lean or rich, etc. at the time of the malfunction.

1	**Check resistance of camshaft position sensor (See page IG–1).**

Reference: INSPECTION USING OSCILLOSCOPE
Refer to DTC P0335/12, 13 (Crankshaft Position Sensor Circuit Malfunction) on page DI–72 for the Reference: INSPECTION USING OSCILLOSCOPE.

NG **Replace camshaft position sensor.**

OK

2	Check for open and short in harness and connector between engine ECU and camshaft position sensor (See page IN–19).

NG **Repair or replace harness or connector.**

OK

3	Inspect sensor installation.

NG **Tighten sensor.**

OK

Check and replace engine ECU (See page IN–19).

DI3P8–01

DTC	P0500/42	Vehicle Speed Sensor Malfunction

CIRCUIT DESCRIPTION

The No.1 vehicle speed sensor outputs a 4 – pulse signal for every revolution of the rotor shaft, which is rotated by the transmission output shaft via the driven gear. After this signal is converted into a more precise rectangular wavefrom by the waveform shaping circuit inside the combination meter, it is then transmitted to the engine ECU. The engien ECU determines the vehicle speed based on the frequency of these pulse signals.

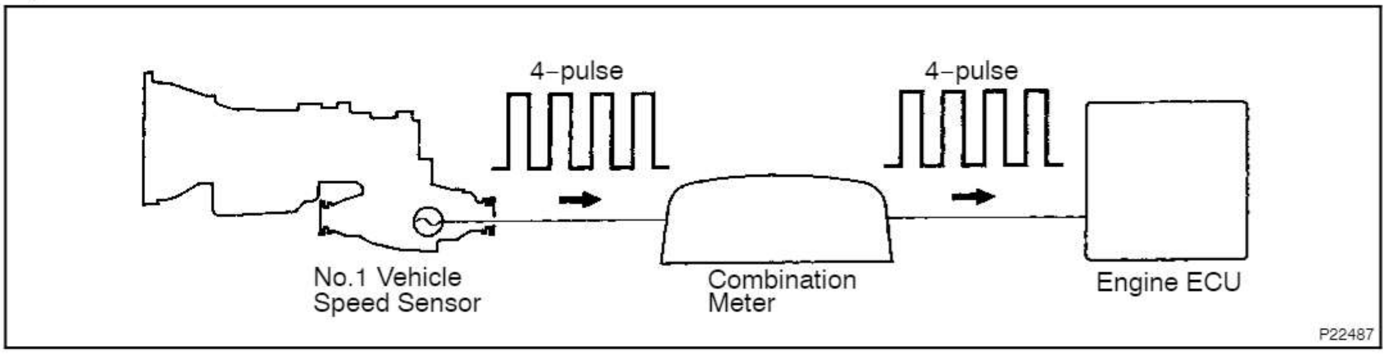

DTC No.	DTC Detecting Condition	Trouble Area
P0500/42	No vehicle speed sensor signal to engine ECU under conditions (a) and (b): (a) Neutral start switch is OFF (b) Vehicle is being driven	• Open or short in No.1 vehicle speed sensor circuit • No.1 vehicle speed sensor • Combination meter • Engine ECU

WIRING DIAGRAM

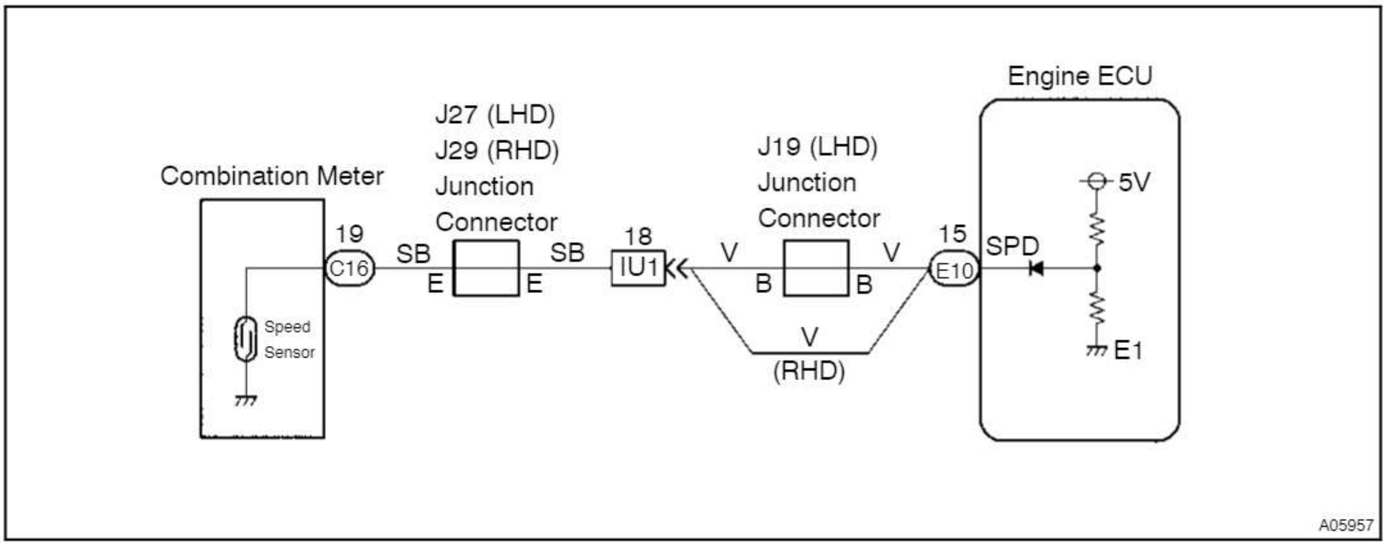

INSPECTION PROCEDURE

HINT:

Read freeze frame data using hand–held tester. Because freeze frame records the engine conditions when the malfunction is detected, when troubleshooting it is useful for determining whether the vehicle was running or stopped, the engine warmed up or not, the air–fuel ratio lean or rich, etc. at the time of the malfunction.

1 Check operation of speedometer.

CHECK:

Drive the vehicle and check if the operation of the speedmeter in the combination meter is normal.

HINT:

The vehicle speed sensor is operating normally if the speedometer display is normal.

NG **Check speedometer circuit.**

OK

2 Check voltage between terminal SPD of engine ECU connector and body ground.

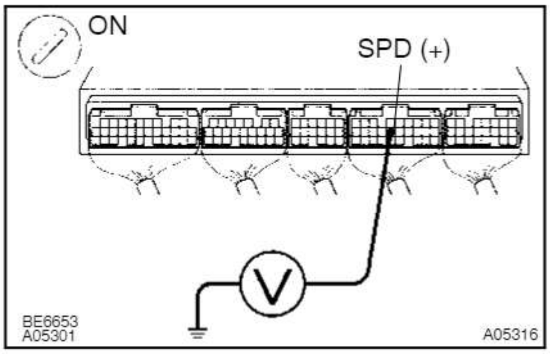

PREPARATION:

- (a) Remove the glove compartment door.
- (b) Shift the shift lever to neutral.
- (c) Jack up a rear wheels on one side.
- (d) Turn the ignition switch ON.

CHECK:

Measure voltage between terminal SPD of the engine ECU connector and body ground when the wheel is turned slowly.

OK:

Voltage is generated intermittently.

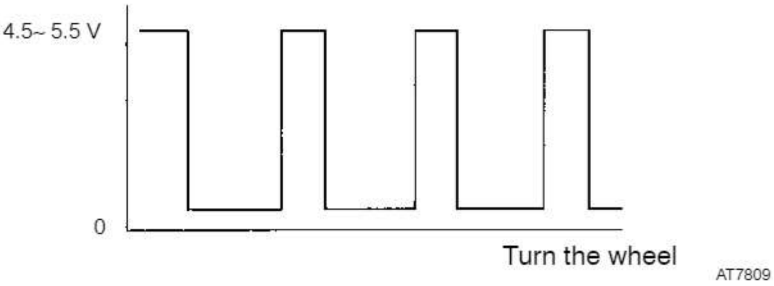

NG **Check and repair harness and connector between combination meter and engine ECU.**

OK

Check and replace engine ECU (See page IN–19).

DTC P1120/19 Accelerator Pedal Position Sensor Circuit Malfunction

CIRCUIT DESCRIPTION

Accelerator pedal position sensor is mounted on the throttle body and it has the 2 sensors to detects the accelerator position and a malfunction of the accelerator position's own.

The accelerator pedal position sensor is connected with the accelerator pedal by the accelerator wire and the voltage applied to the terminals VPA and VPA2 of the engine ECU changes between 0 V and 5 V in proportion to the opening angle of the accelerator pedal.

The engine ECU judges the current opening angle of the accelerator pedal from these signals input from terminals VPA and VPA2 and the engine ECU controls the throttle motor based on these signals.

If this DTC is stored, the engine ECU shuts down the power for the throttle motor and the magnetic clutch, and the throttle valve is fully closed by the return spring.

However, the opening angle of the throttle valve can be controlled by the accelerator pedal through the throttle cable.

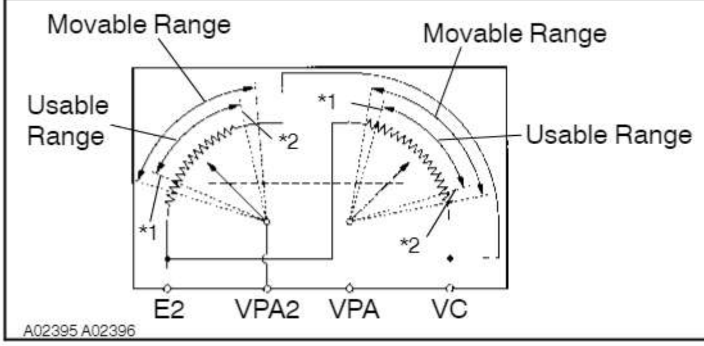

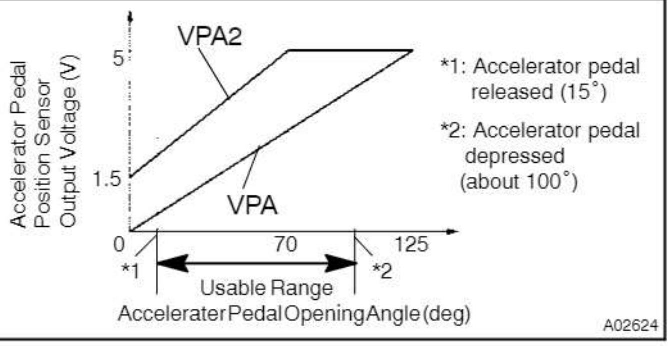

DTC No.	DTC Detecting Condition	Trouble Area
P1120/19	Condition (a), (b), (c) (d) or (e) continues for 2.0 seconds: (a) VPA ≦ 0.2 V (b) VPA2 ≦ 0.5 V (c) VPA ≧ 4.8 V (d) When VPA ≧ 0.2 V and ≦ 1.8 V, and VPA2 ≧ 4.97 V (e) VPA–VPA2 ≦ 0.02 V, or VPA2–VPA ≦ 0.02 V	• Open or short in accelerator pedal position sensor circuit • Accelerator pedal position sensor • Engine ECU
	Condition (a) continues for 0.4 seconds: (a) VPA ≦ 0.2 V and VPA2 ≦ 0.5 V	

HINT:

After confirming DTC P1120/19 use the hand–held tester to confirm the accelerator pedal opening percentage.

Accelerator pedal position expressed as voltage				Trouble area
Accelerator pedal released		Accelerator pedal depressed		
ACCEL POS #1	ACCEL POS #2	ACCEL POS #1	ACCEL POS #2	
0V	0V	0V	0V	VC line open
0V	1.8 – 2.7V	0V	4.7 – 5.1V	VPA line open or grand short
0.3 – 0.9V	0V	3.2 – 4.8V	0V	VPA2 line open or grand short
5V	5V	5V	5V	E2 line open

WIRING DIAGRAM

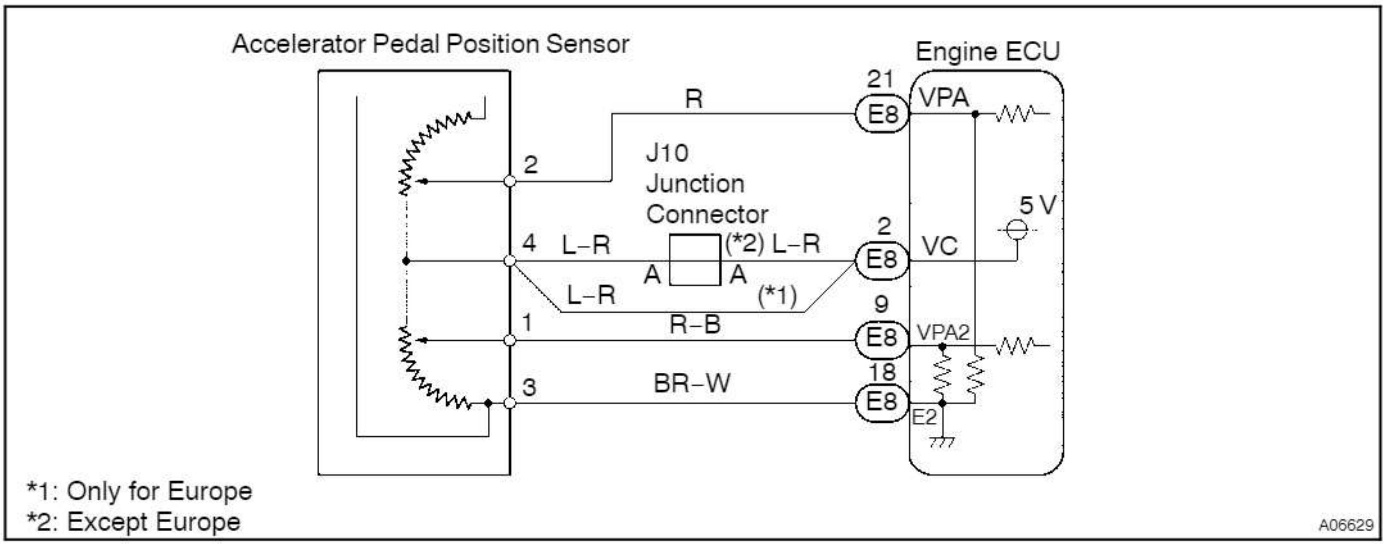

INSPECTION PROCEDURE

HINT:

- If DTC P0110/31 (Intake Air Temp. Circuit Malfunction), P0115/122 (Water Temp. Circuit Malfunction), P0120/41 (Throttle Position Sensor Circuit Malfunction), P1120/19 (Accelerator Pedal Position Sensor Circuit Malfunction) are output simultaneously, E2 (Sensor Ground) may be open.
- Read freeze frame data using hand–held tester. Because freeze frame records the engine conditions when the malfunction is detected, when troubleshooting it is useful for determining whether the vehicle was running or stopped, the engine warmed up or not, the air–fuel ratio lean or rich, etc. at the time of the malfunction.

When using hand–held tester

1	**Connect hand–held tester, read the voltage for accelerator pedal position sensor data.**

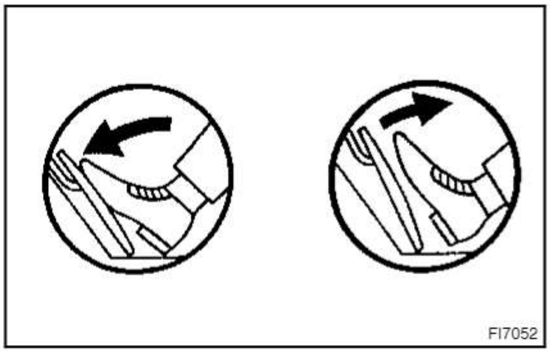

PREPARATION:

(a) Connect the hand–held tester to DLC3.

(b) Turn the ignition switch ON and switch the hand–held tester main switch ON.

CHECK:

Read the voltage for the accelerator pedal position sensor data.

OK:

Accelerator pedal	VPA	VPA2
Released	0.3 – 0.9 V	1.8 – 2.7 V
Depressed	3.2 – 4.8 V	4.7 – 5.1 V

OK **Check and replace engine ECU (See page IN–19).**

NG

2 Check voltage between terminals VC and E2 of engine ECU connector.

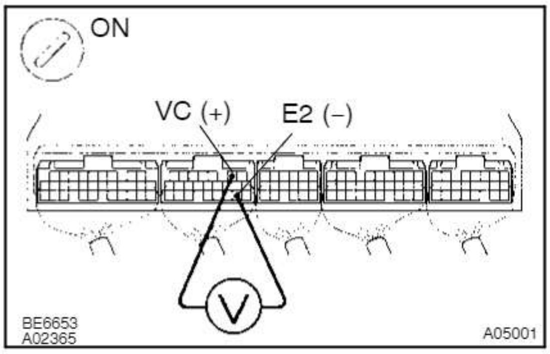

PREPARATION:

(a) Remove the glove compartment door.

(b) Turn the ignition switch ON.

CHECK:

Measure voltage between terminals VC and E2 of the engine ECU connector.

OK:

Voltage: 4.5 – 5.5 V

NG **Check and replace engine ECU (See page IN–19).**

OK

3 Check voltage between terminals VPA, VPA2 and E2 of engine ECU connector.

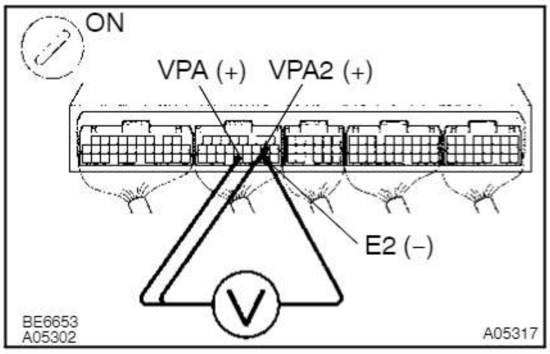

PREPARATION:

(a) Remove the glove compartment door.

(b) Turn the ignition switch ON.

CHECK:

Measure voltage between terminals VPA, VPA2 and E2 of the engine ECU connector.

OK:

Accelerator pedal	Voltage	
	VPA	VPA2
Released	0.3 – 0.9 V	1.8 – 2.7 V
Depressed	3.2 – 4.8 V	4.7 – 5.1 V

OK **Check and replace engine ECU (See page IN–19).**

NG

4	**Check accelerator pedal position sensor (See page FI–45).**

NG → **Replace accelerator pedal position sensor (See page FI–45).**

OK

Check for open and short in harness and connector between engine ECU and accelerator pedal position sensor (VC, VPA,VPA2, E2 line) (See page IN–19).

When not using hand–held tester

1	**Check voltage between terminals VC and E2 of engine ECU connector.**

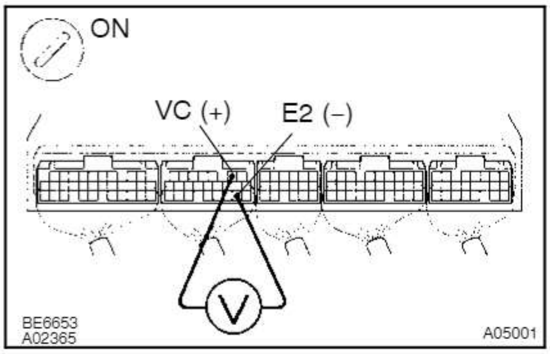

PREPARATION:

(a) Remove the glove compartment door.

(b) Turn the ignition switch ON.

CHECK:

Measure voltage between terminals VC and E2 of the engine ECU connector.

OK:

Voltage: 4.5 – 5.5 V

NG → **Check and replace engine ECU (See page IN–19).**

OK

2 Check voltage between terminals VPA, VPA2 and E2 of engine ECU connector.

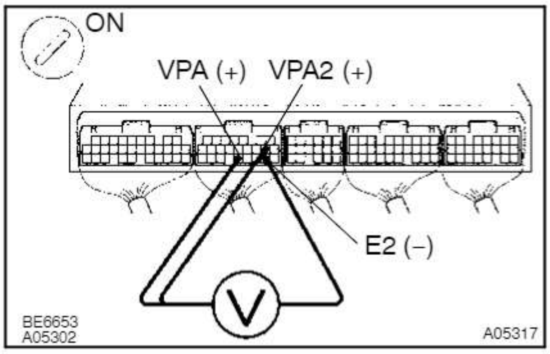

PREPARATION:

(a) Remove the glove compartment door.

(b) Turn the ignition switch ON.

CHECK:

Measure voltage between terminals VPA, VPA2 and E2 of the engine ECU connector.

OK:

Accelerator pedal	Voltage	
	VPA	VPA2
Released	0.3 – 0.9 V	1.8 – 2.7 V
Depressed	3.2 – 4.8 V	4.7 – 5.1 V

OK **Check and replace engine ECU (See page IN–19).**

NG

3 Check accelerator pedal position sensor (See page FI–45).

NG **Replace accelerator pedal position sensor (See page FI–45).**

OK

Check for open and short in harness and connector between engine ECU and accelerator pedal position sensor (VC, VPA,VPA2, E2 line) (See page IN–19).

DI3PA–01

DTC	P1121/19	Accelerator Pedal Position Sensor Range/ Performance Problem

CIRCUIT DESCRIPTION

Refer to DTC P1120/19 (Accelerator Pedal Position Sensor Circuit Malfunction) on page DI–79.

DTC No.	DTC Detecting Condition	Trouble Area
P1121/19	Condition (a) continue for 2.0 seconds: (a) Difference between VPA and VPA2 is out of threshold	• Accelerator pedal position sensor • Engine ECU

WIRING DIAGRAM

Refer to DTC P1120/19 (Accelerator Pedal Position Sensor Circuit Malfunction) on page DI–79.

INSPECTION PROCEDURE

HINT:

Read freeze frame data using hand–held tester. Because freeze frame records the engine conditions when the malfunction is detected, when troubleshooting it is useful for determining whether the vehicle was running or stopped, the engine warmed up or not, the air–fuel ratio lean or rich, etc. at the time of the malfunction.

Replace accelerator pedal position sensor (See page FI–45).

DI3PB–01

DTC	P1125/89*	Throttle Control Motor Circuit Malfunction

***: ETCS trouble code No. is 21.**

CIRCUIT DESCRIPTION

Throttle motor is operated by the engine ECU and it opens and closes the throttle valve.
The opening angle of the throttle valve is detected by the throttle position sensor which is mounted on the throttle body and it provides feedback to the engine ECU to control the throttle motor in order to the throttle valve opening angle properly in response to driving condition.
If this DTC is stored, the engine ECU shuts down the power for the throttle motor and the magnetic clutch, and the throttle valve is fully closed by the return spring.
However, the opening angle of the throttle valve can be controlled by the accelerator pedal through the throttle cable.

DTC No.	DTC Detecting Condition	Trouble Area
P1125/89*	Condition (a) and (b) continues for 0.5 seconds: (a) Throttle control motor output duty ≧ 80 % (b) Throttle control motor current < 0.5 A	• Open or short in throttle control motor circuit • Throttle control motor • Engine ECU
	Throttle control motor current ≧ 16 A	
	Under condition continue for 0.6 seconds: Throttle control motor current ≧ 7 A	

WIRING DIAGRAM

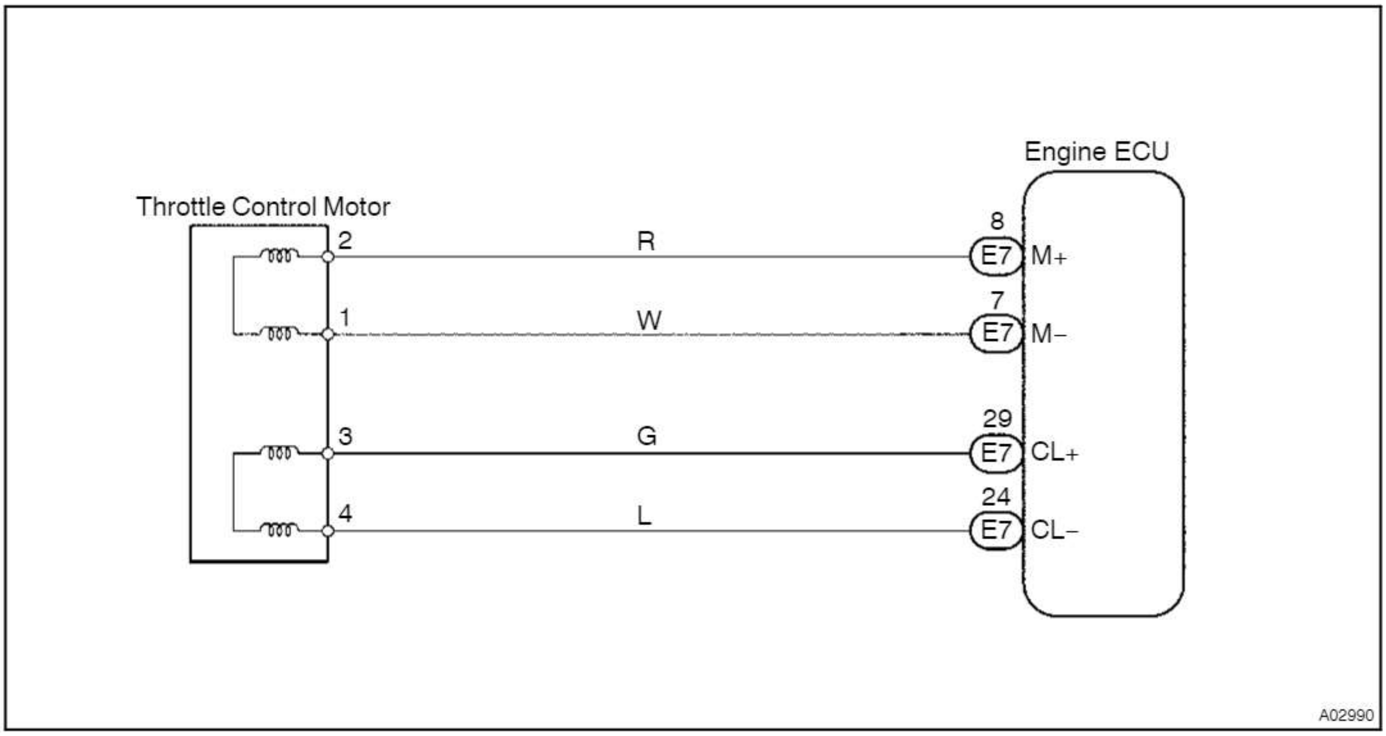

INSPECTION PROCEDURE

HINT:

Read freeze frame data using hand–held tester. Because freeze frame records the engine conditions when the malfunction is detected, when troubleshooting it is useful for determining whether the vehicle was running or stopped, the engine warmed up or not, the air–fuel ratio lean or rich, etc. at the time of the malfunction.

1 Check throttle control motor circuit.

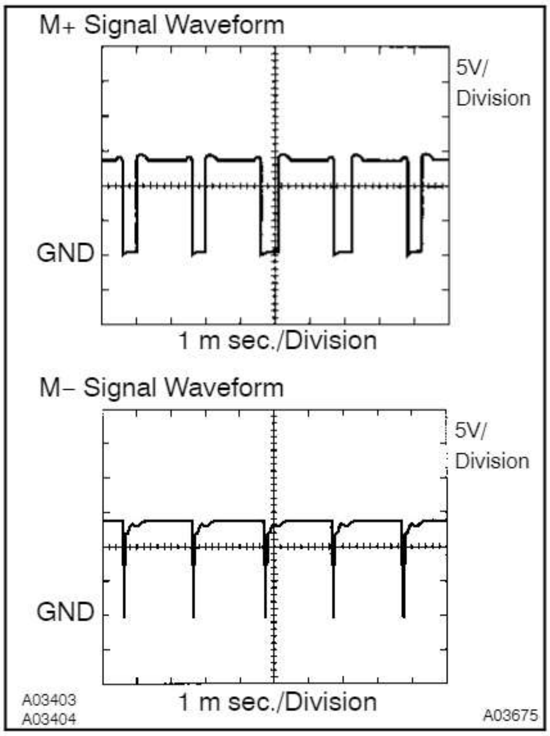

PREPARATION:

(a) Connect the oscilloscope between terminals M+ or M– and E1 of the engine ECU.

(b) Start the engine.

CHECK:

Check the waveform between terminals M+ or M– and E1 of the engine ECU when engine is idling.

OK:

The correct waveforms are as shown

HINT:

The waveform frequency varies depending on the throttle opening.

OK → **Check and replace engine ECU (See page IN–19).**

NG

2	**Check throttle control motor.**

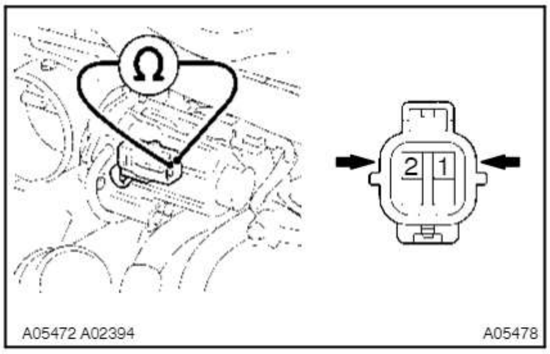

PREPARATION:

Disconnect the throttle control motor and magnetic clutch connector.

CHECK:

Measure resistance between terminals 1 and 2 of the throttle control motor and magnetic clutch.

OK:

Resistance: 0.3 ~ 100 Ω at 20°C (68°F)

NG	**Replace throttle control motor (See page FI–45).**

OK

3	**Check for open and short in harness and connector between throttle control motor and engine ECU (See page IN–19).**

NG	**Repair or replace.**

OK

Check and replace engine ECU (See page IN–19).

DTC | P1126/89* | Magnetic Clutch Circuit Malfunction

***: ETCS trouble code No. is 22.**

CIRCUIT DESCRIPTION

Magnetic clutch is mounted between the throttle motor and the valve, and it connects the throttle motor with the throttle valve.

Therefore, the throttle motor opens and closes the throttle valve through the magnetic clutch.

If the electric throttle control system has a malfunction, the magnetic clutch separates the throttle motor from the throttle valve in order not to operate the throttle valve by the throttle motor.

If this DTC is stored, the engine ECU shuts down the power for the throttle motor and the magnetic clutch, and the throttle valve is fully closed by the return spring.

However, the opening angle of the throttle valve can be controlled by the accelerator pedal through the throttle cable.

DTC No.	DTC Detecting Condition	Trouble Area
P1126/89	Condition (a) continue for 0.8 seconds: (a) Magnetic clutch current ≧ 1.4 A or ≦ 0.4 A	• Open or short in magnetic clutch circuit • Magnetic clutch • Engine ECU
	Condition (a) continues for 1.5 seconds: (a) Magnetic clutch current ≧ 1.0 A or ≦ 0.8 A	

WIRING DIAGRAM

Refer to DTC P1125/89 (Throttle Control Motor Circuit Malfunction) on page DI–85 for the WIRING DIAGRAM.

INSPECTION PROCEDURE

HINT:

Read freeze frame data using hand–held tester. Because freeze frame records the engine conditions when the malfunction is detected, when troubleshooting it is useful for determining whether the vehicle was running or stopped, the engine warmed up or not, the air–fuel ratio lean or rich, etc. at the time of the malfunction.

1 | Check magnetic clutch circuit.

When using hand–held tester:

PREPARATION:

(a) Connect the hand–held tester to the DLC3.

(b) Turn the ignition switch ON and hand–held tester main switch ON.

CHECK:

Read the magnetic clutch current value on the hand–held tester.

OK:

Current: 0.8 – 1.0 A

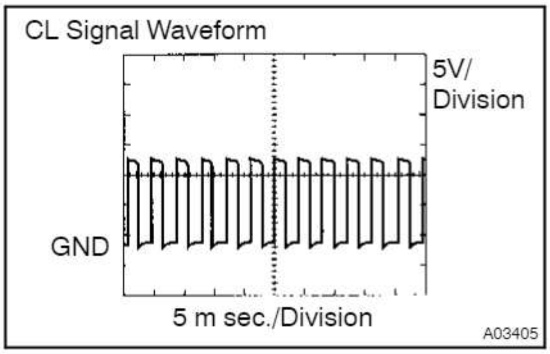

When not using hand–held tester:

PREPARATION:

(a) Connect the oscilloscope between terminals CL+ and CL– of the engine ECU.

(b) Start the engine.

CHECK:

Check the waveform between terminals CL+ and CL– of the engine ECU when engine is idling.

OK:

The correct waveform is as shown.

NG **Go to step 4.**

OK

2	**Check magnetic clutch.**

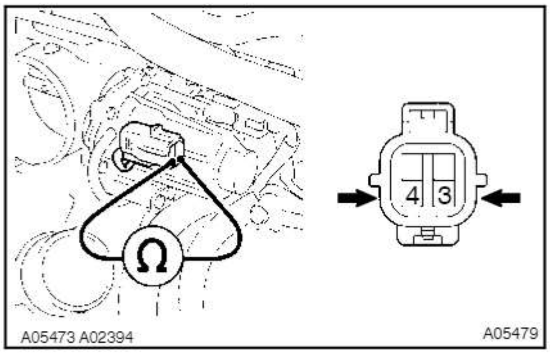

PREPARATION:

Disconnect the throttle control motor and magnetic clutch connector.

CHECK:

Measure resistance between terminals 3 and 4 of the throttle control motor and magnetic clutch.

OK:

Resistance: 4.2 – 5.2 Ω at 20°C (68°F)

NG **Replace throttle control motor (with magnetic clutch) (See page FI–45).**

OK

3	**Check for open and short in harness and connector between magnetic clutch and engine ECU (See page IN–19).**

NG **Repair or replace.**

OK

4	**Check operation of magnetic clutch.**

CHECK:

(a) Clear the DTC.

(b) Perform the following steps and check the DTC.

  (1) Turn the ignition switch ON.

  (2) Start the engine.

  (3) Turn the ignition switch OFF and wait 3 seconds.

  (4) Turn the ignition switch ON.

OK:

DTC P1126/89 is not stored

NG **Replace throttle control motor (with magnetic clutch) (See page FI–45).**

OK

Check and replace engine ECU (See page IN–19).

DTC	P1127/89*	ETCS Actuator Power Source Circuit Malfunction

***: ETCS trouble code No. is 23.**

CIRCUIT DESCRIPTION

Battery positive voltage is supplied to terminal +BM of the engine ECU even once when the ignition switch is OFF for the electric throttle control system.
If this DTC is stored, the engine ECU shuts down the power for the throttle motor and the magnetic clutch, and the throttle valve is fully closed by the return spring.
However, the opening angle of the throttle valve can be controlled by the accelerator pedal through the throttle cable.

DTC No.	DTC Detecting Condition	Trouble Area
P1127/89	Open in ETCS power source circuit	• Open in ETCS power source circuit • Engine ECU

WIRING DIAGRAM

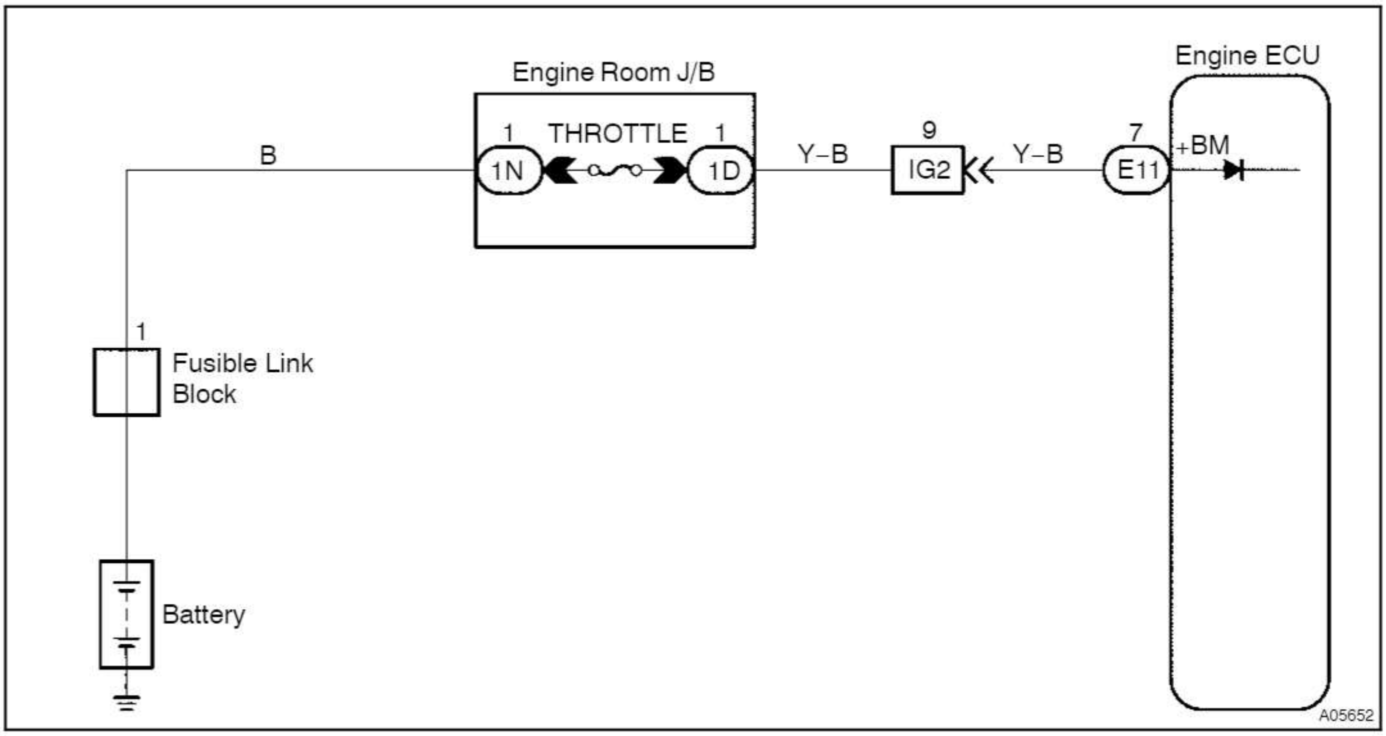

INSPECTION PROCEDURE

HINT:

Read freeze frame data using hand–held tester. Because freeze frame records the engine conditions when the malfunction is detected, when troubleshooting it is useful for determining whether the vehicle was running or stopped, the engine warmed up or not, the air–fuel ratio lean or rich, etc. at the time of the malfunction.

1 Check THROTTLE fuse.

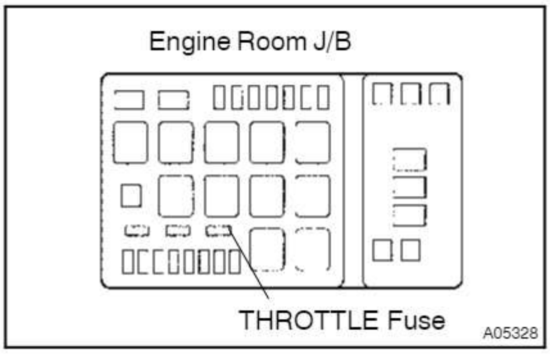

PREPARATION:

Remove the THROTTLE fuse from the engine room J/B.

CHECK:

Check countinuity of the THROTTLE fuse.

OK:

Continuity

NG → **Check for short in all harness and components connected to THROTTLE fuse.**

OK

2 Check voltage between terminal +BM of engine ECU connector and body ground.

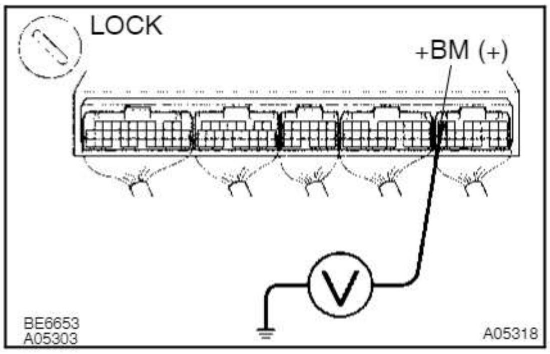

PREPARATION:

Remove the glove compartment door.

CHECK:

Measure voltage between terminal +BM of the engine ECU connector and body ground.

OK:

Voltage: 9 – 14 V

OK → **Check and replace engine ECU (See page IN–19).**

NG

Check and repair harness or connector between battery and THROTTLE fuse and engine ECU (See page IN–19).

DI3PE–01

DTC | P1128/89* | Throttle Control Motor Lock Malfunction

***: ETCS trouble code No. is 31.**

CIRCUIT DESCRIPTION

Throttle motor is operated by the engine ECU and it opens and closes the throttle valve.

The opening angle of the throttle valve is detected by the throttle position sensor which is mounted on the throttle body and it provides feedback to the engine ECU to control the throttle motor in order the throttle valve opening angle properly in response to driving condition.

If this DTC is stored, the engine ECU shuts down the power for the throttle motor and the magnetic clutch, and the throttle valve is fully closed by the return spring.

However, the opening angle of the throttle valve can be controlled by the accelerator pedal through the throttle cable.

DTC No.	DTC Detecting Condition	Trouble Area
P1128/89	Lock throttle control motor during control throttle control motor	• Throttle control motor • Throttle body assembly • Engine ECU

WIRING DIAGRAM

Refer to DTC P1125/89 (Throttle Control Motor Circuit Malfunction) on page DI–85 for the WIRING DIAGRAM.

INSPECTION PROCEDURE

HINT:

Read freeze frame data using hand–held tester. Because freeze frame records the engine conditions when the malfunction is detected, when troubleshooting it is useful for determining whether the vehicle was running or stopped, the engine warmed up or not, the air–fuel ratio lean or rich, etc. at the time of the malfunction.

1	**Check throttle control motor (See page DI–85, step 2).**

NG → **Replace throttle control motor (See page FI–45).**

OK

2	**Visualy check throttle valve.**

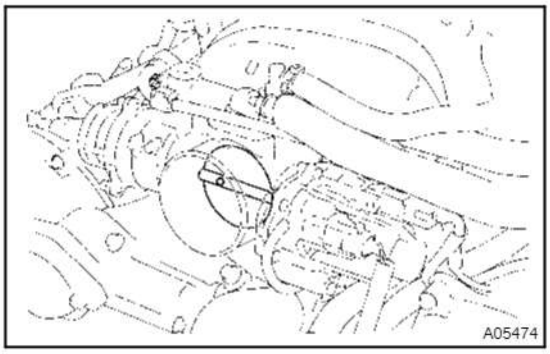

PREPARATION:

Remove the intake air connector.

CHECK:

Check whether or not a foreign body is caught between the throttle valve and the housing.

NG **Remove a foreign body and clean throttle body.**

OK

Replace throttle body.

DTC	P1129/89*	Electric Throttle Control System Malfunction

***: ETCS trouble code No. is 32.**

CIRCUIT DESCRIPTION

Electric Throttle Control System (ETCS) is composed of the throttle motor to operate the throttle valve, the electromagnetic clutch to connect the throttle motor with the throttle valve, the throttle position sensor to detect the opening angle of the throttle valve, the accelerator pedal position sensor to detect the accelerator pedal position, the engine ECU to control the ETCS and the one valve type throttle body.

The engine ECU controls the throttle motor to make the throttle valve opening angle properly in response driving condition.

The throttle position sensor which is mounted on the throttle body detects the opening angle of the throttle valve, and it provides feedback to the engine ECU to control the throttle motor.

If the ETCS has a malfunction, the engine ECU shuts down the power for the throttle motor and the magnetic clutch, and the throttle valve is fully closed by the return spring.

However, the opening angle of the throttle valve can be controlled by the accelerator pedal through the throttle cable.

DTC No.	DTC Detecting Condition	Trouble Area
P1129/89	Throttle opening angle continues to vary great from target throttle opening angle	• Electric throttle control system • Engine ECU

WIRING DIAGRAM

Refer to DTC P1125/89 (Throttle Control Motor Circuit Malfunction) on page DI–85 for the WIRING DIAGRAM.

INSPECTION PROCEDURE

HINT:

Read freeze frame data using hand–held tester. Because freeze frame records the engine conditions when the malfunction is detected, when troubleshooting it is useful for determining whether the vehicle was running or stopped, the engine warmed up or not, the air–fuel ratio lean or rich, etc. at the time of the malfunction.

Replace engine ECU, and clear DTC. If DTC P1129/89 is memorized again, and then replace throttle body.

DTC | P1200/78 | Fuel Pump Relay/ECU Circuit Malfunction (Europe)

CIRCUIT DESCRIPTION

The fuel pump speed is controlled at 2 steps (high speed, low speed) by the condition of the engine (srarting, light load, heavy load), when the engine starts (STA ON), the engine ECU sends a Hi signal (about 5 V) to the fuel pump ECU (FPC terminal). The fuel pump ECU then outputs Hi voltage (battery positive voltage) to the fuel pump so that the fuel pump operaters at high speed. After the engine starts, during idling or light loads, the engine ECU outputs a Low signal (about 2.5 V) to the fuel pump ECU, the fuel pump ECU outputs Low voltage (about 9 V) to the fuel pump and causes the fuel pump to operate at low speed.
If the intake air volume increases (high engine load), the engine ECU sends a Hi signal to the fuel pump ECU and causes the fuel pump to operate at high speed.

DTC No.	DTC Detecting Condition	Trouble Area
P1200	Open or short in fuel pump cirucit for 1 sec. or more with engine speed 1,000 rpm or less (2 trip detection logic)	• Open or short in fuel pump ECU circuit • Fuel pump ECU • Engine ECU power source circuit • Fuel pump • Engine ECU
	Open in input circuit of fuel pump ECU (FPC) with engine speed 1,000 rpm or less (2 trip detection logic)	
	Open or short in diagnostic signal line (DI) of fuel pump ECU with engine speed 1,000 rpm or less (2 trip detection logic)	

WIRING DIAGRAM

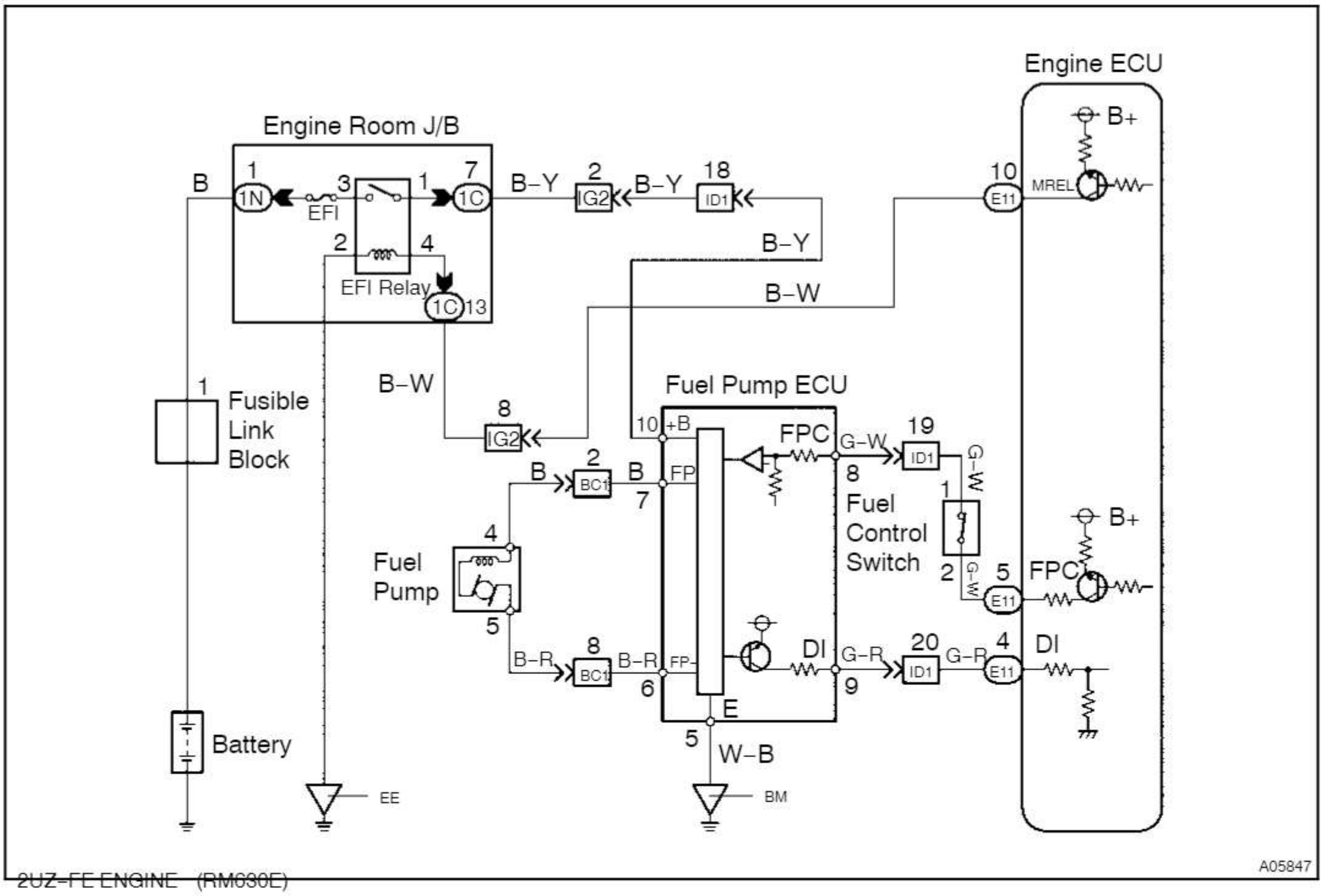

INSPECTION PROCEDURE

HINT:

Read freeze frame data using hand–held tester. Because freeze frame records the engine conditions when the malfunction is detected, when troubleshooting it is useful for determining whether the vehicle was running or stopped, the engine warmed up or not, the air–fuel ratio lean or rich, etc. at the time of the malfunction.

1	**Check operation of fuel pump (See page FI–7).**

OK → **Go to step 7.**

NG

2	**Check voltage of fuel pump ECU power source.**

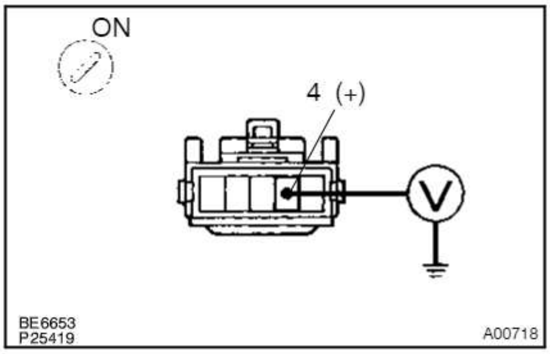

PREPARATION:

(a) Remove the LH quarter trim (See page FI–72).

(b) Disconnect the fuel pump ECU connector.

(c) Turn the ignition switch ON.

CHECK:

Measure voltage between terminal 4 of the fuel pump ECU connector and body ground.

OK:

Voltage: 9 – 14 V

NG → **Check for open and short in harness and connector between EFI main relay (Marking: EFI) and fuel pump ECU (See page IN–19).**

OK

3	**Check voltage between terminals 1 and 3 of fuel pump ECU connector.**

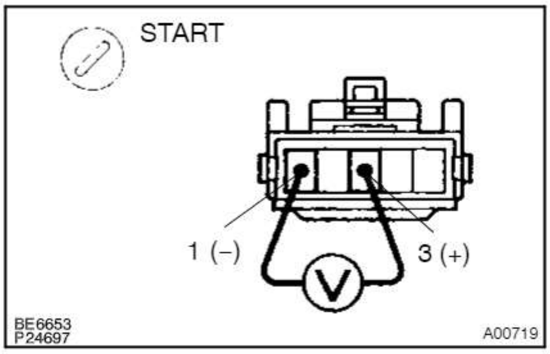

PREPARATION:

(a) Remove the LH quarter trim (See page FI–72).

(b) Disconnect the fuel pump ECU connector.

CHECK:

Measure voltage between terminals 1 and 3 of the fuel pump ECU connector when the ignition switch is turned to START.

OK:

Voltage: 4.5 – 5.5 V

OK	**Go to step 5.**

NG

4	**Check for open and short in harness and connector between terminals FPC of engine ECU and 3 of fuel pump ECU, terminal 1 of fuel pump ECU and body ground (See page IN–19).**

NG	**Repair or replace harness or connector.**

OK

Check and replace engine ECU (See page IN–19).

5	**Check fuel pump (See page FI–7).**

NG	**Repair or replace fuel pump.**

OK

6 **Check for open and short in harness and connector between terminal 5 of fuel pump ECU and fuel pump, fuel pump and body ground (See page IN–19).**

NG **Repair or replace harness or connector.**

OK

Replace fuel pump.

7 **Check for open and short in harness and connector between terminals DI of engine ECU and 2 of fuel pump ECU (See page IN–19).**

NG **Repair or replace harness or connector.**

OK

Check and replace engine ECU
(See page IN–19).

DTC	P1200/78	Fuel Pump Relay/ECU Circuit Malfunction (Except Europe)

CIRCUIT DESCRIPTION

In the diagram below, when the engine is cranked, current flows from terminal ST of the ignition switch to the starter relay coil and also current flows to terminal STA of the engine ECU (STA signal).

When the STA signal and NE signal are input to the engine ECU, Tr1 is turned ON, current flows to coil of the circuit opening relay, the relay switches on, power is supplied to the fuel pump and the fuel pump operates. While the NE signal is generated (engine running), the engine ECU keeps Tr1 ON (circuit opening relay ON) and the fuel pump also keeps operating. The fuel pump speed is controlled at two levels (high speed or low speed) by the condition of the engine (starting, light load, heavy load). When the engine starts (STA ON), Tr2 in the engine ECU is OFF, so the fuel pump relay closes and battery voltage is applied directly to the fuel pump. Fuel pump operates at high speed. After the engine starts during idling or light loads, since Tr2 goes ON, power is supplied to the fuel pump via the fuel pump resistor. Fuel pump operates at low speed.

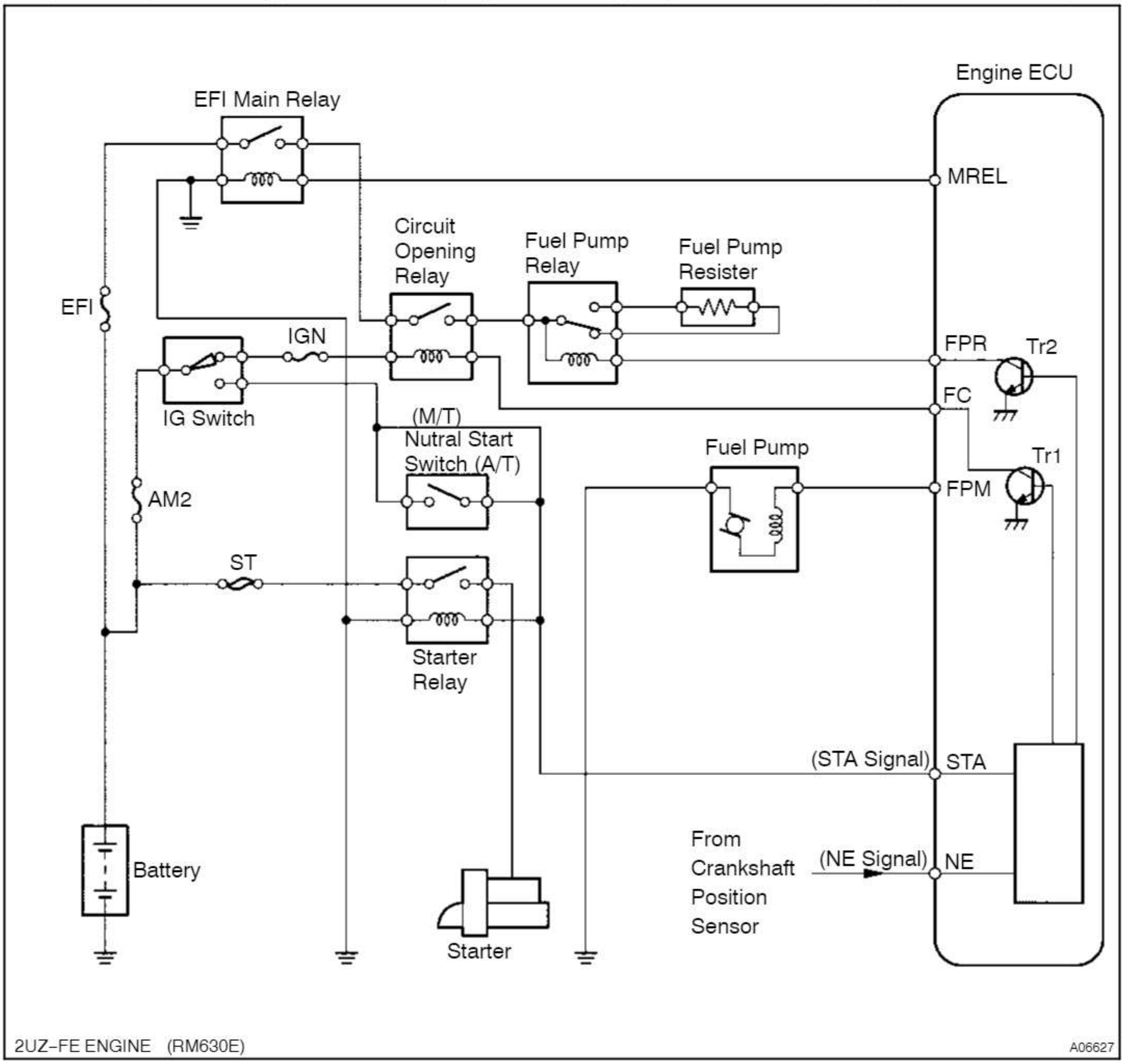

DTC No.	DTC Detecting Condition	Trouble Area
P1200/78	Open or short in fuel pump relay circuit	• Open or short in fuel pump relay circuit • Fuel pump relay • Engine ECU

WIRING DIAGRAM

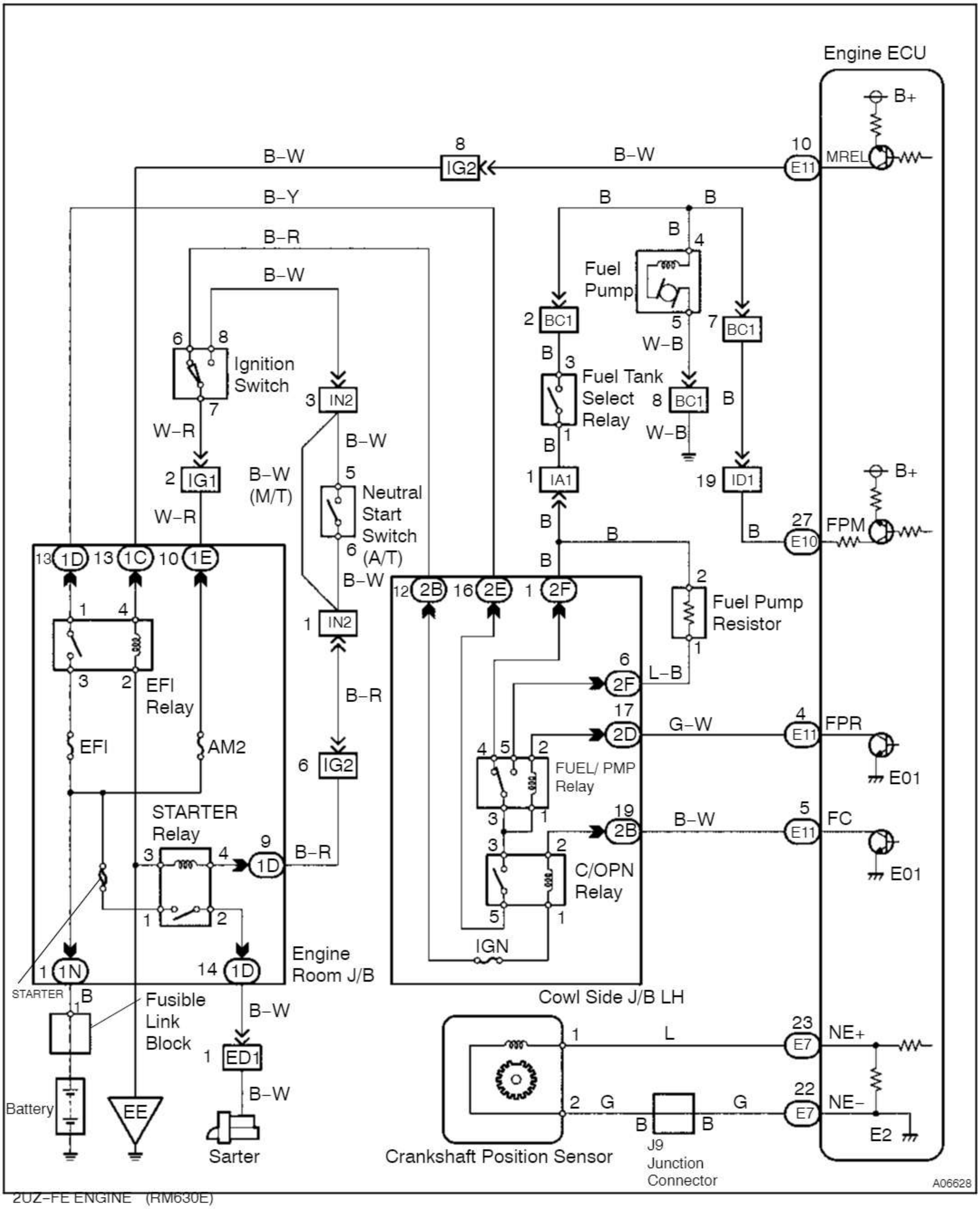

HINT:
This diagnostic chart is based on premise that engine is started. If the engine is not started, proceed to problem symptoms table on DI–25.

INSPECTION PROCEDURE

HINT:
Read freeze frame data using hand–held tester. Because freeze frame records the engine conditions when the malfunction is detected, when troubleshooting it is useful for determining whether the vehicle was running or stopped, the engine warmed up or not, the air–fuel ratio lean or rich, etc. at the time of the malfunction.

1	**Check voltage between terminal FPR of engine ECU and body ground.**

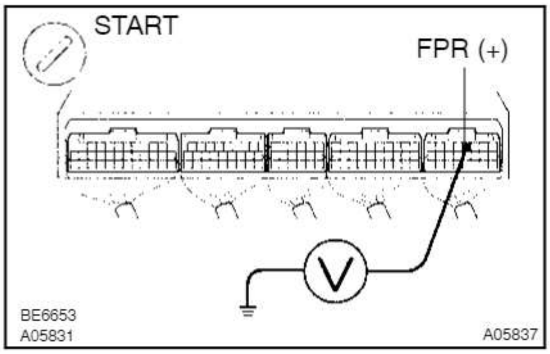

PREPARATION:
(a) Remove the glove compartment door.
(b) Start the engine.

CHECK:
Measure voltage between terminal FPR of the engine ECU connector and body ground while racing engine.

OK:

Time after engine started	Voltage
Less than 60 seconds	9 ~ 14 V
60 seconds or more	0 ~ 3 V

OK → **Check and replace engine ECU (See page IN–19).**

NG

2	**Check operation of fuel pump relay (Marking: FUEL/PMP) (See page FI–54).**

NG → **Replace fuel pump relay.**

OK

Repair or replace harness or connector between fuel pump relay and engine ECU.

DI3PI–01

DTC P1300/14 Igniter Circuit Malfunction (No.1)

DTC P1305/15 Igniter Circuit Malfunction (No.2)

DTC P1310/14 Igniter Circuit Malfunction (No.3)

DTC P1315/14 Igniter Circuit Malfunction (No.4)

DTC P1320/14 Igniter Circuit Malfunction (No.5)

DTC P1325/14 Igniter Circuit Malfunction (No.6)

DTC P1330/14 Igniter Circuit Malfunction (No.7)

DTC P1340/14 Igniter Circuit Malfunction (No.8)

CIRCUIT DESCRIPTION

A DIS (Direct Ignition System) has been adopted. The DIS improves the ignition timing accuracy, reduces high–voltage loss, and enhances the the overall reliability of the ignition system by eliminating the distributor. The DIS is a 1–cylinder ignition system which ignites one cylinder with one ignition coil. In the 1–cylinder ignition system, the one spark plug is connected to the end of the secondary winding. High voltage generated in the secondary winding is applied directly to the spark plug. The spark of the spark plug pass from the center elecrtode to the ground electrode.

The engine ECU determines ignition timing and outputs the ignition signals (IGT) for each cylinder. Based on IGT signals, the power transistors in the igniter cuts off the current to the primary coil in the ignition coil is supplied to the spark plug that are connected to the end of the secondary coil. At the same time, the igniter also sends an ignition confirmation signal (IGF) as a fail–safe measure to the engine ECU.

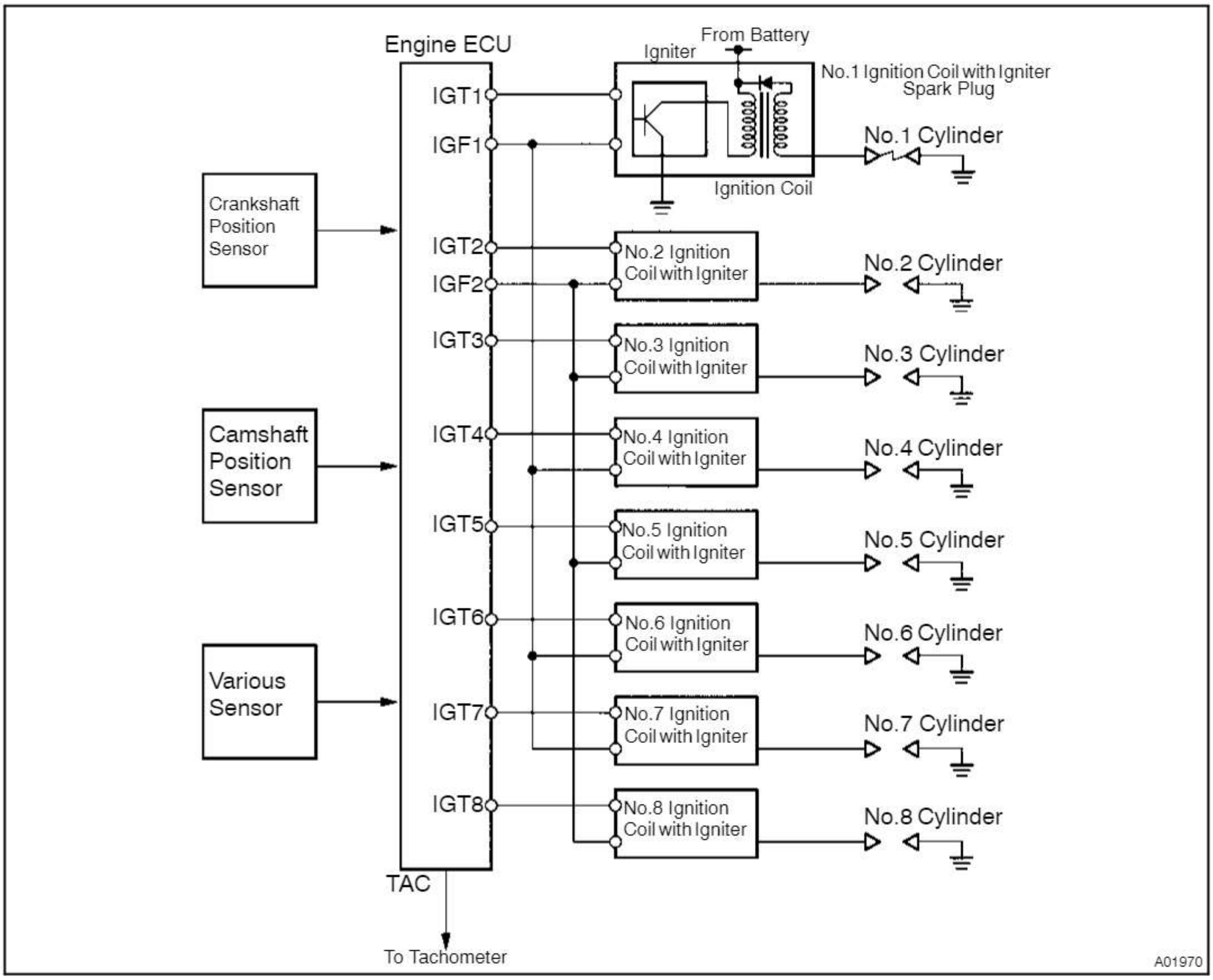

DTC No.	DTC Detecting Condition	Trouble Area
P1300/14 P1305/15 P1310/14 P1315/14 P1320/14 P1325/14 P1330/14 P1340/14	No IGF signal to engine ECU while engine is running	• Open or short in IGF1 or IGF2 and IGT1 ~ 8 circuit from ignition coil with igniter • No.1 ~ No.8 ignition coil with igniter • Engine ECU

WIRING DIAGRAM

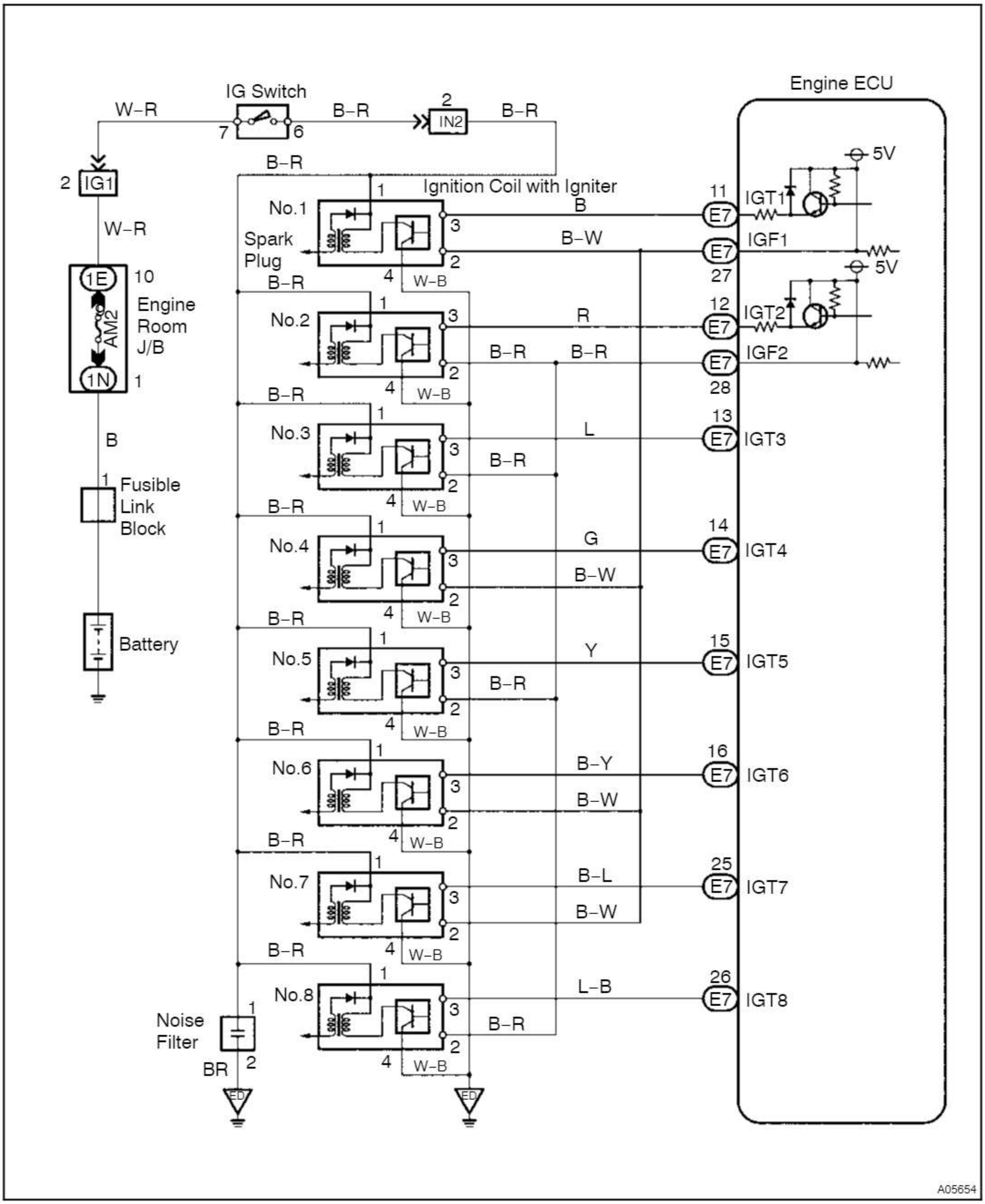

INSPECTION PROCEDURE

HINT:

- If DTC P1300/14 is displayed, check No.1 ignition coil with igniter circuit.
- If DTC P1305/15 is displayed, check No.2 ignition coil with igniter circuit.
- If DTC P1310/14 is displayed, check No.3 ignition coil with igniter circuit.
- If DTC P1315/14 is displayed, check No.4 ignition coil with igniter circuit.
- If DTC P1320/14 is displayed, check No.5 ignition coil with igniter circuit.
- If DTC P1325/14 is displayed, check No.6 ignition coil with igniter circuit.
- If DTC P1330/14 is displayed, check No.7 ignition coil with igniter circuit.
- If DTC P1340/14 is displayed, check No.8 ignition coil with igniter circuit.
- If DTC P1300/14, P1315/14, P1325/14, P1330/14 are output simultaneously, IGF1 circuit may be open or short.
- If DTC P1305/15, P1310/14, P1320/14, P1340/14 are output simultaneously, IGF2 circuit may be open or short.
- Read freeze frame data using hand–held tester. Because freeze frame records the engine conditions when the malfunction is detected, when troubleshooting it is useful for determining whether the vehicle was running or stopped, the engine warmed up or not, the air–fuel ratio lean or rich, etc. at the time of the malfunction.

1	**Check spark plug and spark (See page IG–1).**

NG **Go to step 4.**

OK

2	**Check for open and short in harness and connector in IGF and IGT signal circuit between engine ECU and ignition coil with igniter (See page IN–19).**

NG **Repair or replace harness or connector.**

OK

3	**Disconnect ignition coil with igniter connector and check voltage between terminals IGF1, 2 of engine ECU connector and body ground.**

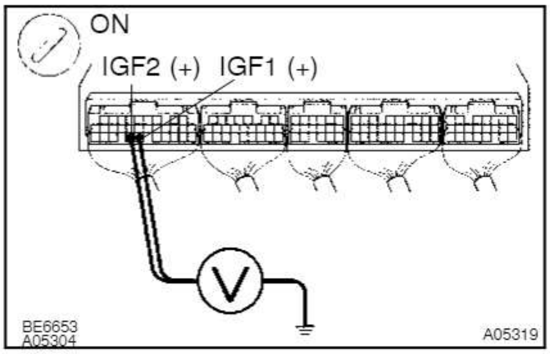

PREPARATION:

(a) Remove the glove compartment.
(b) Disconnect the ignition coil with igniter connector.
(c) Turn the ignition switch ON.

CHECK:

Measure voltage between terminals IGF1, 2 of the engine ECU connector and body ground.

OK:

Voltage: 4.5 – 5.5 V

OK → **Replace ignition coil with igniter.**

NG

Check and replace engine ECU (See page IN–19).

4	**Check for open and short in harness and connector in IGT signal circuit between engine ECU and ignition coil with igniter (See page IN–19).**

NG → **Repair or replace harness or connector.**

OK

5 Check voltage between terminals IGT1 ~ 8 of engine ECU connector and body ground.

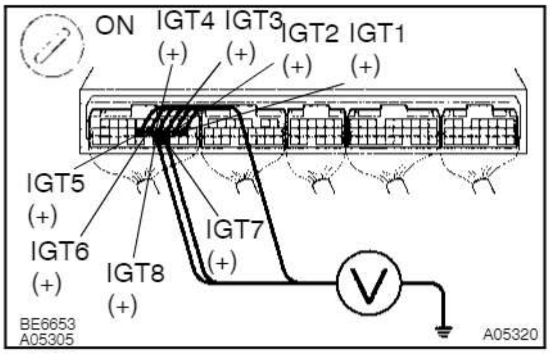

PREPARATION:

Remove the glove compartment door.

CHECK:

Measure voltage between terminals IGT1 ~ 8 of the engine ECU connector and body ground when engine is cranked.

OK:

Voltage: More than 0.1 V and less than 4.5 V

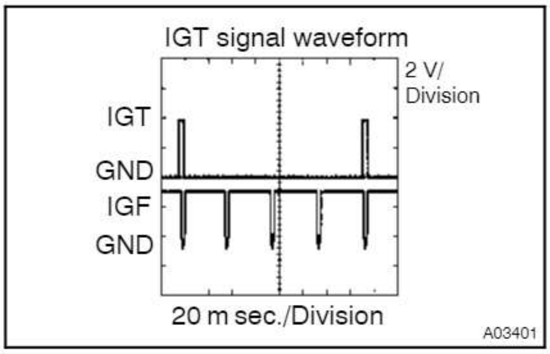

Reference: INSPECTION USING OSCILLOSCOPE

During cranking or idling, check waveform between terminals IGT1 ~ 8 and E1 of the engine ECU connector.

HINT:

Correct waveform appears as sohwn, with rectangle waves.

NG — **Check and replace engine ECU (See page IN–19).**

OK

6 Disconnect ignition coil with igniter connector and check voltage between terminals IGT1 ~ 8 of engine ECU connector and body ground.

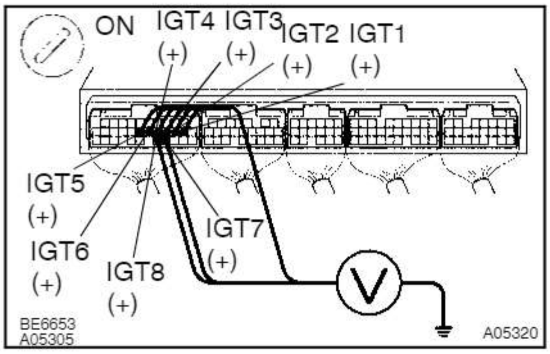

PREPARATION:

(a) Remove the glove compartment door.
(b) Disconnect the ignition coil with igniter connector.

CHECK:

Measure voltage between terminals IGT1 ~ 8 of the engine ECU connector and body ground when engine is cranked.

OK:

Voltage: More than 0.1 V and less than 4.5 V

NG — **Check and replace engine ECU (See page IN–19).**

OK

7 Check ignition coil with igniter power source circuit.

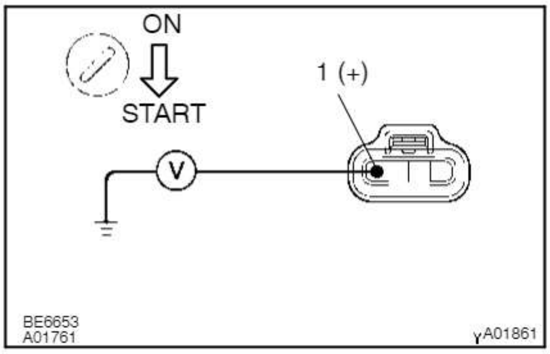

PREPARATION:

Disconnect the ignition coil with igniter connector.

CHECK:

Measure voltage between terminal 1 of ignition coil with igniter connector and body ground, when ignition switch is turned to "ON" and "START" position.

OK:

Voltage: 9 – 14 V

OK → **Repair ignition coil with igniter power source circuit.**

NG

8 Check for open and short in harness and connector between ignition switch and ignition coil with igniter (See page IN–19).

NG → **Repair or replace harness or connector.**

OK

9 Check EFI main relay (Marking: EFI) (See page FI–52).

NG → **Replace EFI main relay (marking: EFI).**

OK

Replace ignition coil with igniter.

DI3PJ–01

DTC P1335/13 Crankshaft Position Sensor Circuit Malfunction (during engine running)

CIRCUIT DESCRIPTION

Refer to DTC P0335/12, 13 (Crankshaft Position Sensor Circuit Malfunction) on page DI–72.

DTC No.	DTC Detecting Condition	Trouble Area
P1335/13	No crankshaft position sensor signal to engine ECU with engine speed 1,000 rpm or more	• Open or short in crankshaft position sensor circuit • Crankshaft position sensor • Starter • Engine ECU

WIRING DIAGRAM

Refer to DTC P0335/12, 13 (Crankshaft Position Sensor Circuit Malfunction) on page DI–72 for the WIRING DIAGRAM.

INSPECTION PROCEDURE

Refer to DTC P0335/12, 13 (Crankshaft Position Sensor Circuit Malfunction) on page DI–72.

DI3PK–01

DTC	P1633/89*	ECU Malfunction (ETCS Circuit)

***: ETCS trouble code No. is 33.**

CIRCUIT DESCRIPTION

Refer to DTC P1129/89 (Electric Throttle Control System Malfunction) on page DI–95.

DTC No.	DTC Detecting Condition	Trouble Area
P1633/89	Engine ECU malfunction	• Engine ECU

INSPECTION PROCEDURE

HINT:

Read freeze frame data using hand–held tester. Because freeze frame records the engine conditions when the malfunction is detected, when troubleshooting it is useful for determining whether the vehicle was running or stopped, the engine warmed up or not, the air–fuel ratio lean or rich, etc. at the time of the malfunction.

Replace engine ECU.

Starter Signal Circuit

CIRCUIT DESCRIPTION

When the engine is cranked, the intake air flow is slow, so fuel vaporization is poor. A rich mixture is therefore necessary in order to achieve good startability. While the engine is being cranked, the battery positive voltage is applied to terminal STA of the engine ECU. The starter signal id mainly used to increase the fuel injection volume for the starting injection control and after–start injection control.

WIRING DIAGRAM

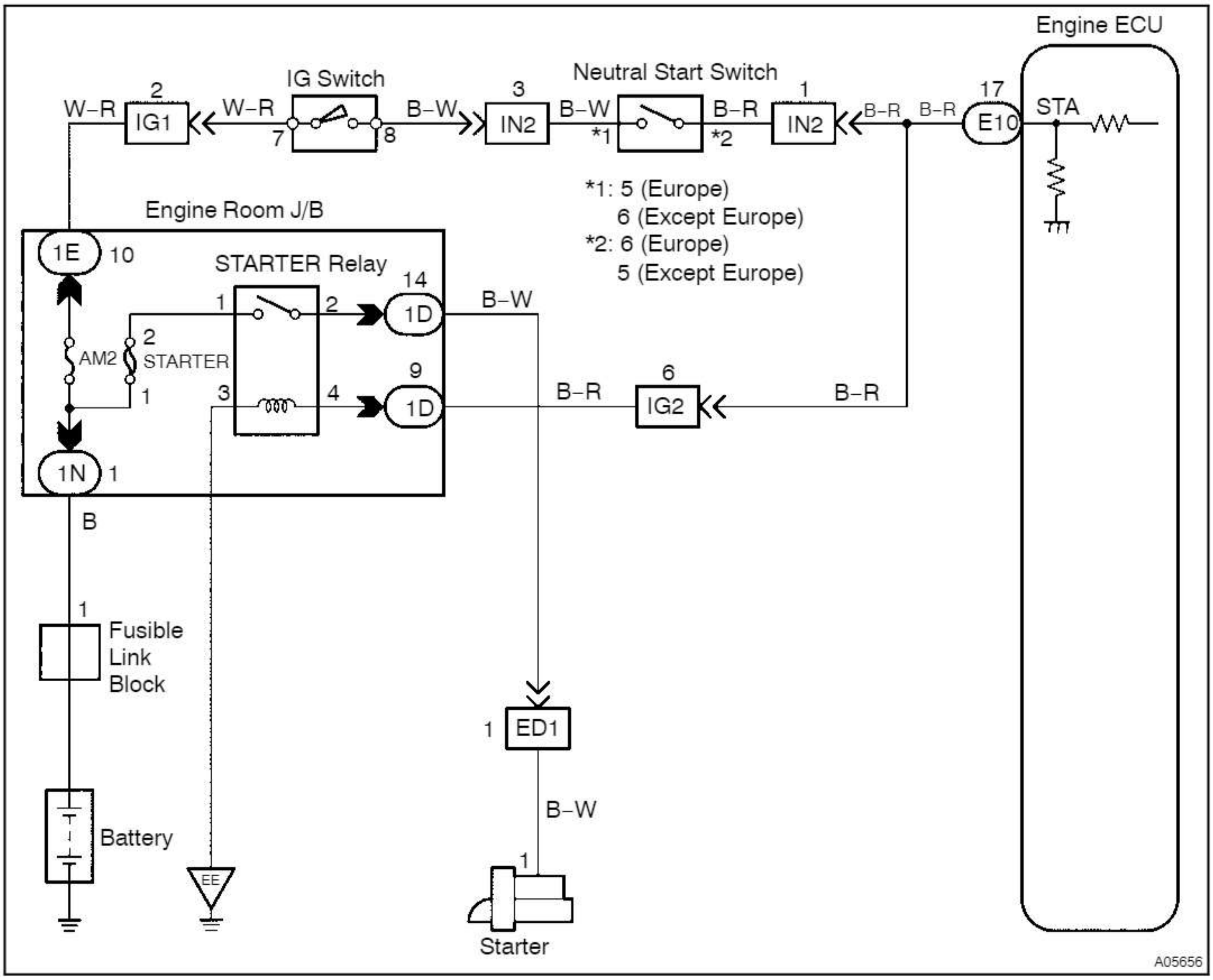

INSPECTION PROCEDURE

HINT:

This diagnostic chart is based on the premise that the engine is cranked normally. If the engine is not cranked, proceed to the problem symptoms table on page DI–25.

When using hand–held tester

1 **Connect hand–held tester and check STA signal.**

PREPARATION:

(a) Connect the hand–held tester to the DLC3.

(b) Turn the ignition switch ON and push the hand–held tester main switch ON.

CHECK:

Read STA signal on the hand–held tester while starter operates.

OK:

Ignition Switch Position	ON	START
STA signal	OFF	ON

OK **Proceed to next circuit inspection shown on problem symptoms table (See page DI–25).**

NG

2 **Check for open in harness and connector between engine ECU and starter relay (Marking: STARTER) (See page IN–19).**

NG **Repair or replace harness or connector.**

OK

Check and replace engine ECU (See page IN–19).

When not using hand–held tester

1	**Check voltage between terminal STA of engine ECU connector and body ground.**

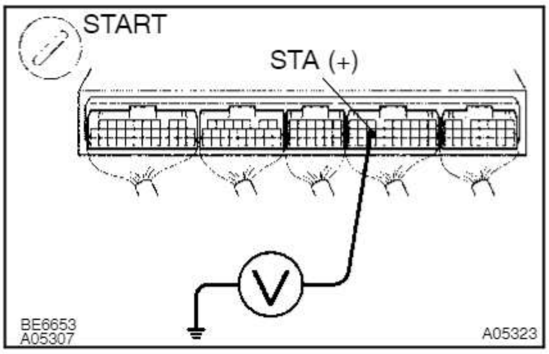

PREPARATION:

(a) Remove the glove compartment door.

(b) Turn the ignition switch ON.

CHECK:

Measure voltage between terminal STA of the engine ECU connector and body ground, during engine cranking.

OK:

Voltage: 6 V or more

OK	**Proceed to next circuit inspection shown on problem symptoms table (See page DI–25).**

NG

2	**Check for open in harness and connector between engine ECU and starter relay (Marking: STARTER) (See page IN–19).**

NG	**Repair or replace harness or connector.**

OK

Check and replace engine ECU (See page IN–19).

DI3PM–01

Engine ECU Power Source Circuit

CIRCUIT DESCRIPTION

When the ignition switch is turned ON, battery positive voltage is applied to the terminal IGSW of the engine ECU and the EFI main relay (Making: EFI) control circuit in the engine ECU sends a signal to the terminal MREL of the engine ECU switching on the EFI main relay.

This signal causes current to flow to the coil, closing the contacts of the EFI main relay and supplying power to the terminals +B of the engine ECU.

If the ignition switch is turned off, the engine ECU continues to switch on the EFI main relay for a maximum of 2 seconds for the initial setting of the throttle body.

WIRING DIAGRAM

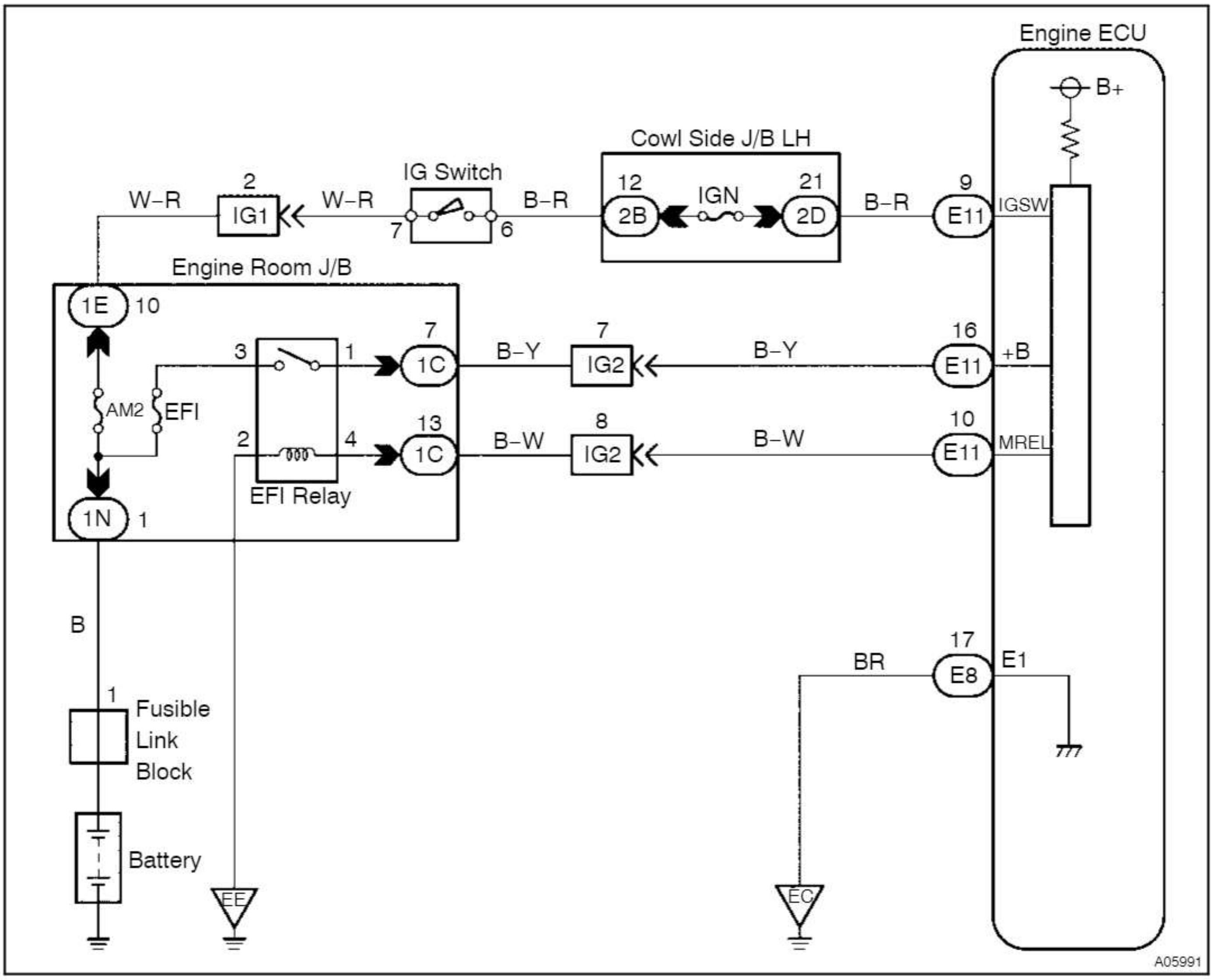

INSPECTION PROCEDURE

1	**Check voltage between terminals +B and E1 of engine ECU connector.**

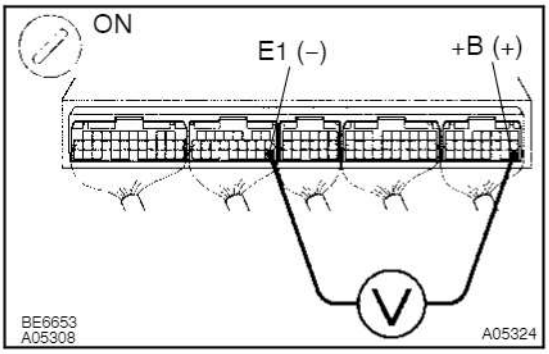

PREPARATION:

(a) Remove the glove compartment door.

(b) Turn the ignition switch ON.

CHECK:

Measure voltage between terminals +B and E1 of the engine ECU connector.

OK:

Voltage: 9 – 14 V

OK → **Proceed to next circuit inspection shown on Problem symptoms table (See page DI–25).**

NG

2	**Check for open in harness and connector between terminal E1 of engine ECU and body ground (See page IN–19).**

NG → **Repair or replace harness or connector.**

OK

3	**Check voltage between terminal IGSW of engine ECU connector and body ground.**

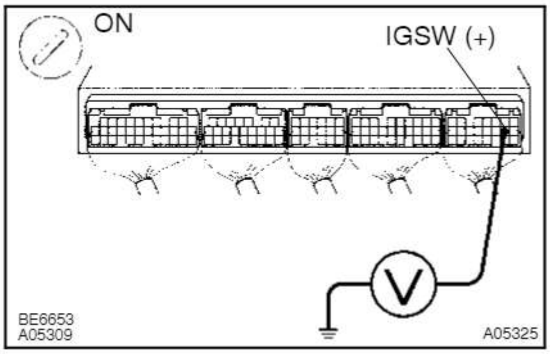

PREPARATION:

Turn the ignition switch ON.

CHECK:

Measure voltage between terminal IGSW of the engine ECU and body ground.

OK:

Voltage: 9 – 14 V

OK → **Go to step 6.**

NG

4 Check IGN fuse.

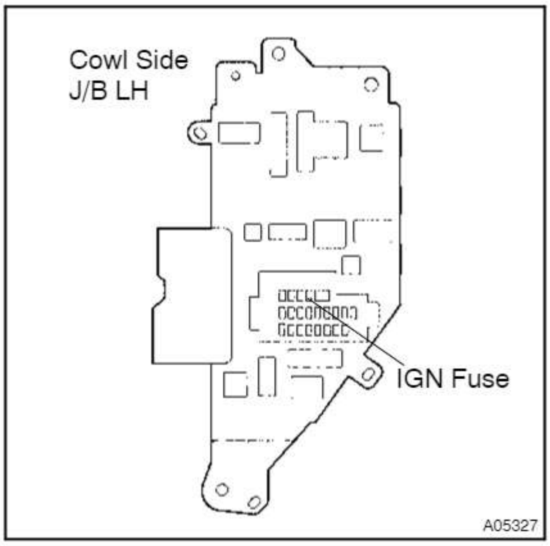

PREPARATION:

Remove the IGN fuse from the cowl side J/B LH.

CHECK:

Check continuity of the IGN fuse.

OK:

Continuity

NG **Check for short in all harness and components connected to IGN fuse.**

OK

5 Check ignition switch.

NG **Replace ignition switch.**

OK

Check and repair harness and connector between battery and ignition switch, ignition switch and engine ECU.

6	**Check voltage between terminal MREL of engine ECU connector and body ground.**

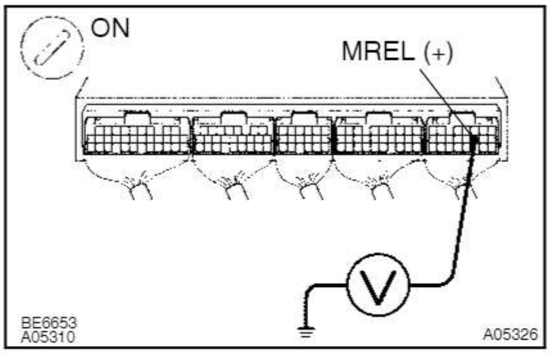

PREPARATION:

Turn the ignition switch ON.

CHECK:

Measure voltage between terminal MREL of the engine ECU connector and body ground.

OK:

Voltage: 9 – 14 V

NG	**Check and replace engine ECU (See page IN–19).**

OK

7	**Check EFI fuse of engine room J/B (See page DI–129).**

NG	**Check for short in all harness and components connected to EFI fuse.**

OK

8	**Check EFI main relay (Marking: EFI) (See page FI–52).**

NG	**Replace EFI main relay (Marking: EFI).**

OK

9 **Check for open and short in harness and connector between terminal MREL of engine ECU and body ground (See page IN–19).**

NG **Repair and replace harness or connector.**

OK

Check and repair harness or connector between EFI fuse and battery.

Injector Circuit

CIRCUIT DESCRIPTION

The injectors are provided to the intake manifold. They inject fuel into the cylinders based on the signals from engine ECU.

WIRING DIAGRAM

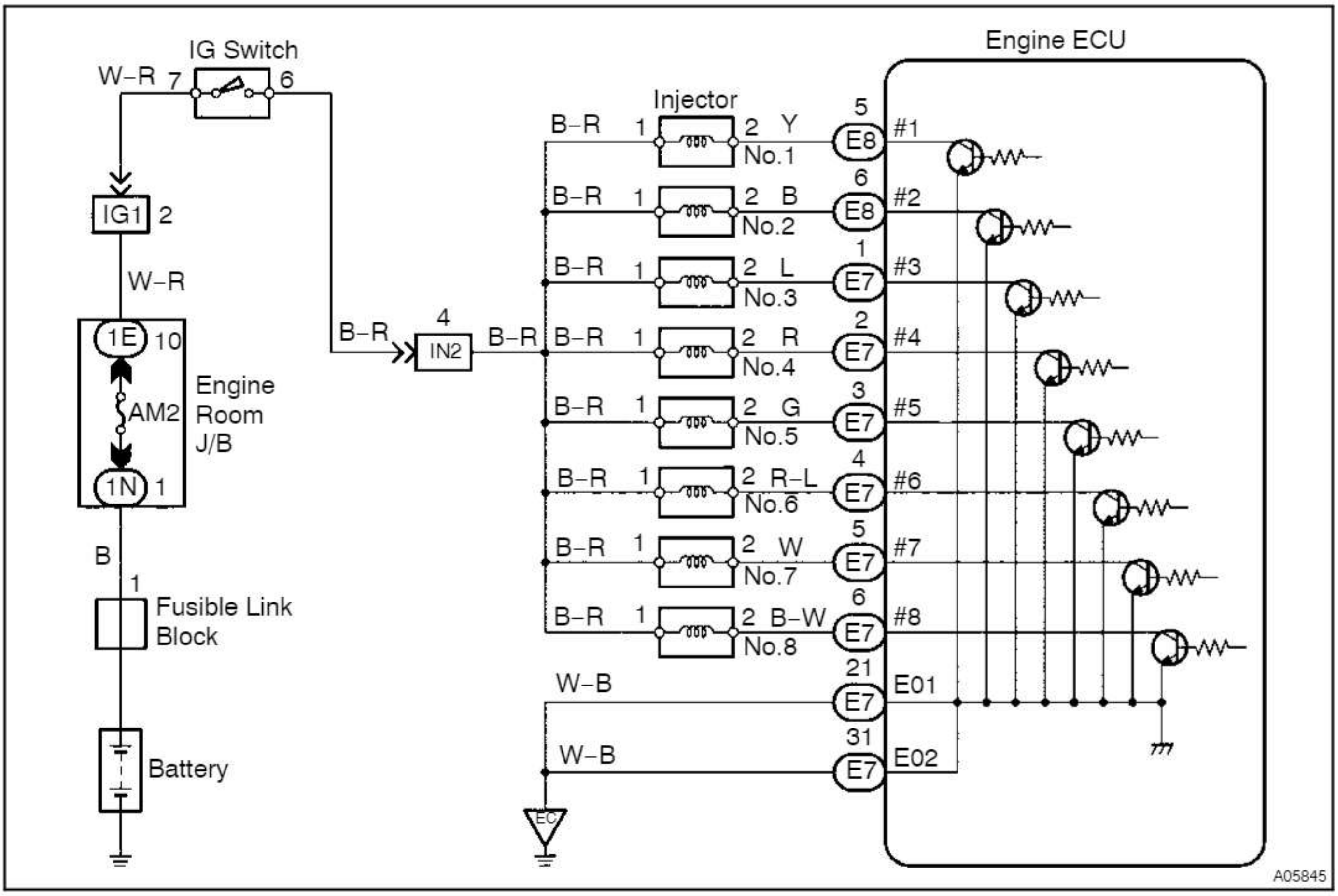

INSPECTION PROCEDURE

1	**Check voltage of engine ECU terminal for injector of failed cylinder.**

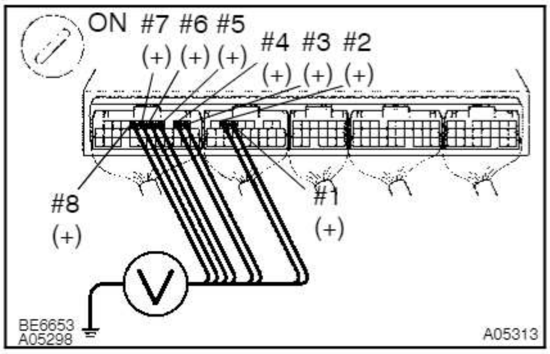

PREPARATION:

(a) Remove the glove compartment door.

(b) Turn the ignition switch ON.

CHECK:

Measure voltage between applicable terminal of the engine ECU connector and body ground.

OK:

Voltage: 9 – 14 V

Reference INSPECTION USING OSCILLOSCOPE

With the engine idling, measure between terminals #1 ~ #8 and E01 of the engine ECU connector.

HINT:

The correct waveforms are as shown.

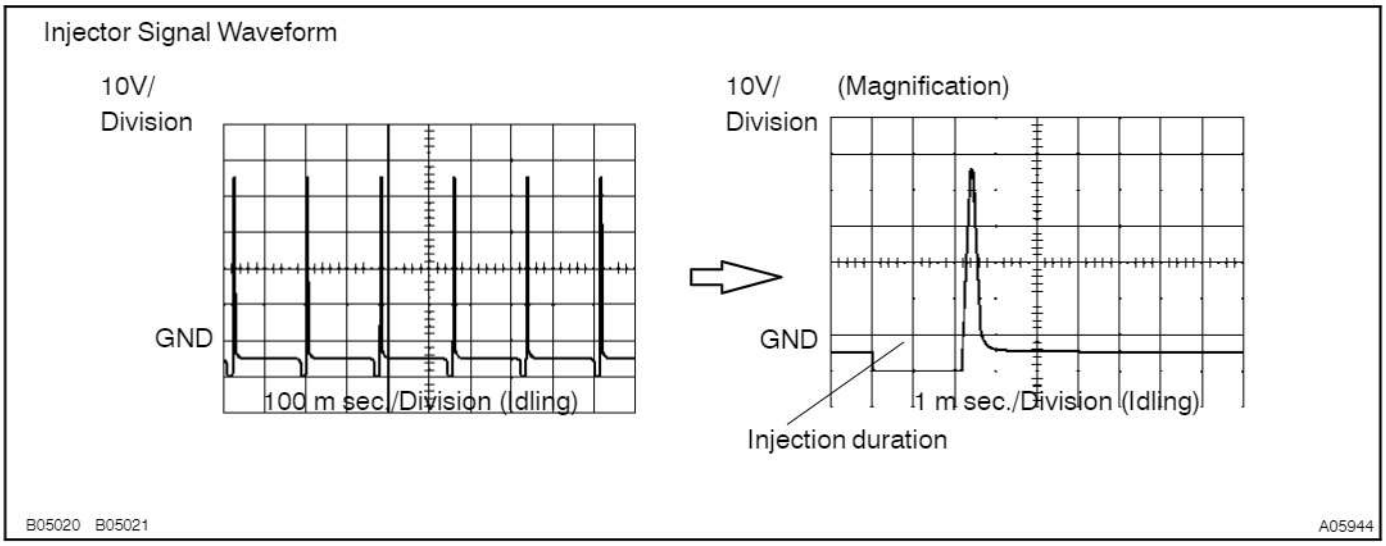

OK **Go to step 4.**

NG

2 Check AM2 fuse.

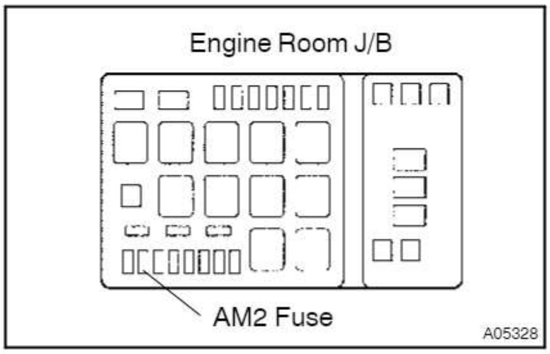

PREPARATION:

Remove the AM2 fuse from the engine room J/B.

CHECK:

Check continuity of the AM2 fuse.

OK:

Continuity

NG **Check for short in harness and all components connected to AM2 fuse.**

OK

3 **Check resistance of injectors (See page FI–24).**

NG **Replace injector.**

OK

Check and repair harness and connector between engine ECU and battery.

4 **Check for open in harness and connector between terminal E01 – E03 of engine ECU connector and body ground (See page IN–19).**

NG **Repair or replace harness or connector.**

OK

5 Check injectors.

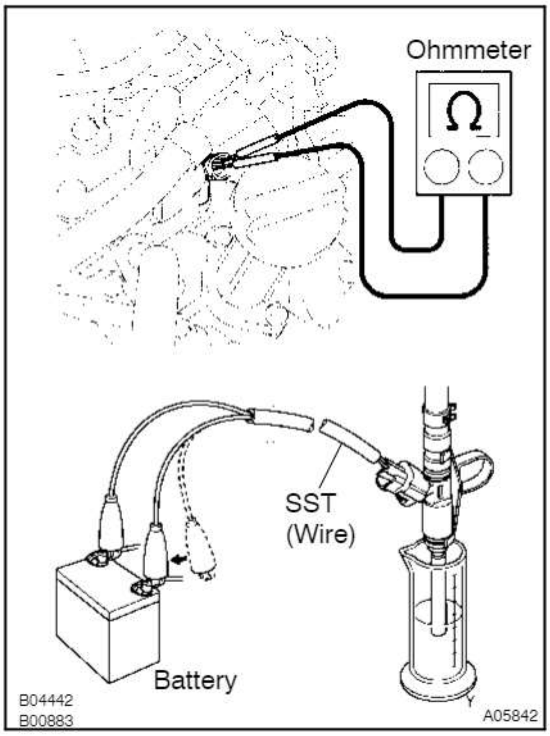

PREPARATION:

Disconnect the injector connectors.

CHECK:

Measure resistance of the injectors.

OK:

Resistance: 13.4 – 14.2 Ω at 20°C (68°F)

CHECK:

Check injection volume of the injectors.

OK:

Injection volume:
56 – 69 cm^3 (3.4 – 4.2 cu in.)/15 sec.
Difference between each injector:
Less than 13 cm^3 (0.8 cu in.)
Leakage
Fuel drop: One drop or less per 12 minutes

OK

Proceed to next circuit inspection shown on problem symptoms table (See page DI–25).

NG

Replace injector(s).

DI3PO–01

Variable Resistor Circuit (Only for vehicles w/o TWC)

CIRCUIT DESCRIPTION

This resistor is used to change the air–fuel ratio of the air–fuel mixture.
The idle mixture is adjusted using this resistor.
Turning the idle mixture adjusting screw clockwise moves the contacts inside the resistor, raising terminal VAF voltage. Conversely, turning the screw counterclockwise lowers the terminal VAF voltage.
When the terminal VAF voltage rises, the engine ECU increases the injection volume slightly, making the air–fuel mixture a little richer.

WIRING DIAGRAM

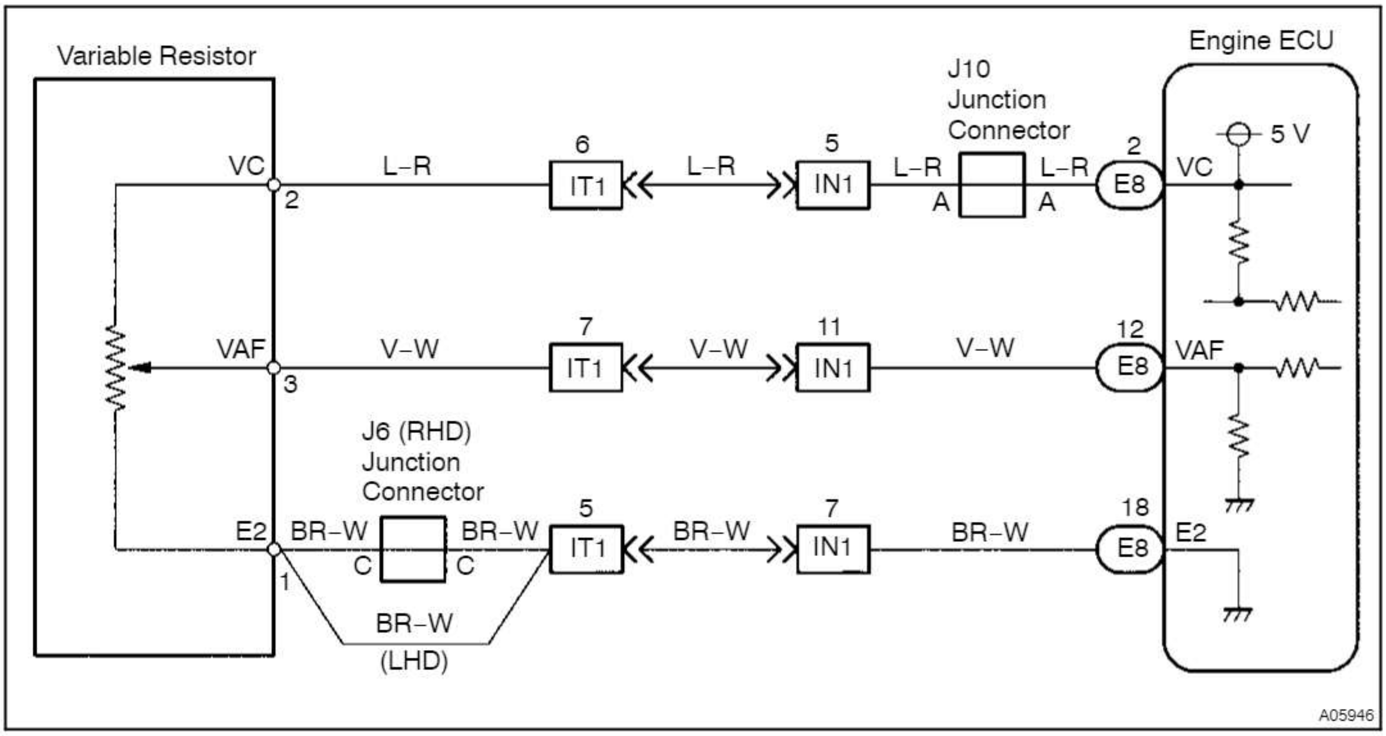

INSPECTION PROCEDURE

NOTICE:

Always use a CO meter when adjusting the idle mixture. If a CO meter is not available, DO NOT ATTEMPT TO ADJUST IDLE MIXTURE.

1	**Check CO concentration.**

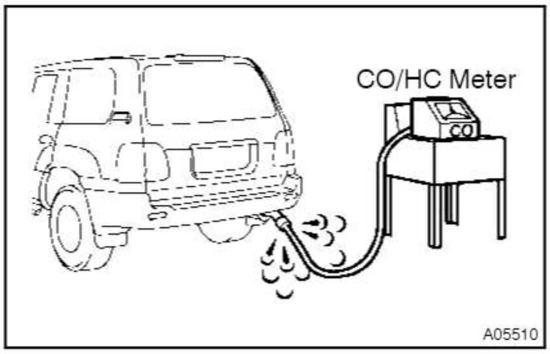

PREPARATION:

(a) Warm up engine to normal operating temperature.
(b) All accessories switched OFF.
(c) All vacuum lines properly connected.
(d) Transmission in "N" position.
(e) Connect the tachometer.
(f) Ignition timing check correctly.
(g) Idle speed check correctly.
(h) Check that the CO meter is properly calibrated.
(i) Race the engine at 2,500 rpm about 2 minutes.

CHECK:

Insert a tester probe at least 40 cm (1.3 ft) into the tailpipe. Measure the concentration with 1 – 3 minutes after racing the engine to allow the the concentration to stabilize.

OK:

Idle CO concentration: 1.5 ± 0.5 %

OK	**Proceed to next circuit inspection shown problem symptoms tables (See page DI–25).**

NG

2 Adjust CO concentration.

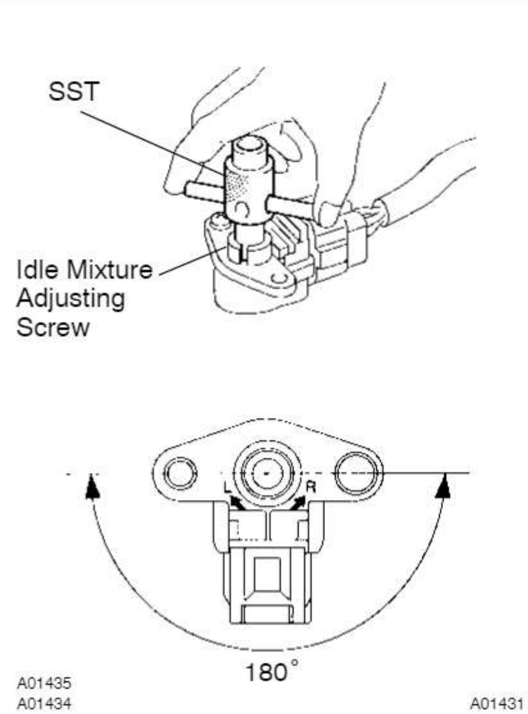

PREPARATION:

Same condition as step 1 of this chart.

CHECK:

Using SST, adjust the mixture by turning the idle mixture adjusting screw in the variable resistor.

SST 09243–00020

RESULT:

OK	CO concentration: 1.5 ± 0.5 %
NG type I	Change in CO concentration
NG type II	No change in CO concentration

HINT:

Always check idle speed after turning the idle mixture adjusting screw. If it is incorrect, readjust idle speed.

Adjustable range of the idle mixture adjust to turn this screw is 180 degrees. Do not turn this screw more than it.

Type I **See page EM–1 and go on troubleshooting.**

Type II **Go to step 3.**

OK

Adjustment is complete.

3 Check resistance of variable resistor.

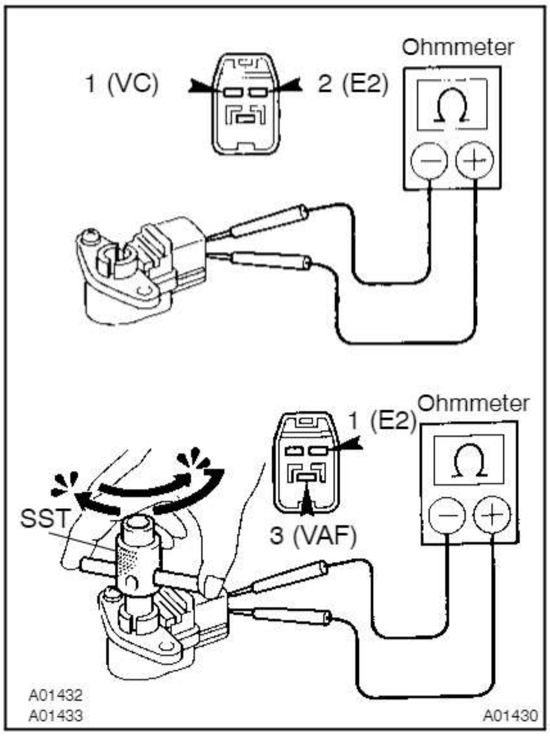

Check Resistance Between 1 and 2:

PREPARATION:

Disconnect the variable resistor connector.

CHECK:

Measure resistance between terminals 1 and 2 of the variable resistor.

OK:

Resistance: 4 – 6 kΩ

Check Resistance Between 1 and 3:

CHECK:

Measure resistance between terminals 1 and 3 when turning the idle mixture adjusting screw fully clockwise and counterclockwise using SST.

SST 09243–00020

OK:

Resistance:
Change from about 5 kΩ to 0 kΩ accordingly

NG **Replace variable resister.**

OK

4	**Check voltage between terminals VAF and E2 of engine ECU connector.**

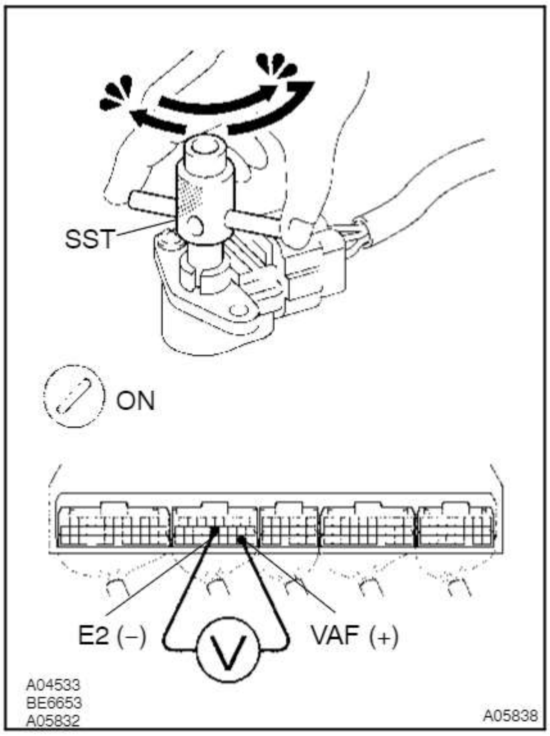

PREPARATION:

(a) Reconnect the variable resistor connector.
(b) Remove the glove compartment door.
(c) Turn the ignition switch ON.

CHECK:

Measure voltage between terminals VAF and E2 of engine ECU connector while slowly turning the idle mixture adjusting screw first fully counterclockwise, and then fully clockwise, using SST.

SST 09243–00020

OK:

Voltage changes smoothly from 0 V to about 5 V:
i.e., does not suddenly jump up to 5 V or down to 0 V.

OK | **Check and replace engine ECU (See page IN–19).**

NG

5	**Check for open and short in harness and connector between variable resistor and engine ECU (See page IN–19).**

NG | **Repair or replace harness or connector.**

NG

Check and replace engine ECU (See page IN–19).

DI3PP–01

Back Up Power Source Circuit

CIRCUIT DESCRIPTION

Battery positive voltage is supplied to terminal BATT of the engine ECU even when the ignition switch is OFF for use by the DTC memory, air–fuel ratio adaptive control value memory, etc.

WIRING DIAGRAM

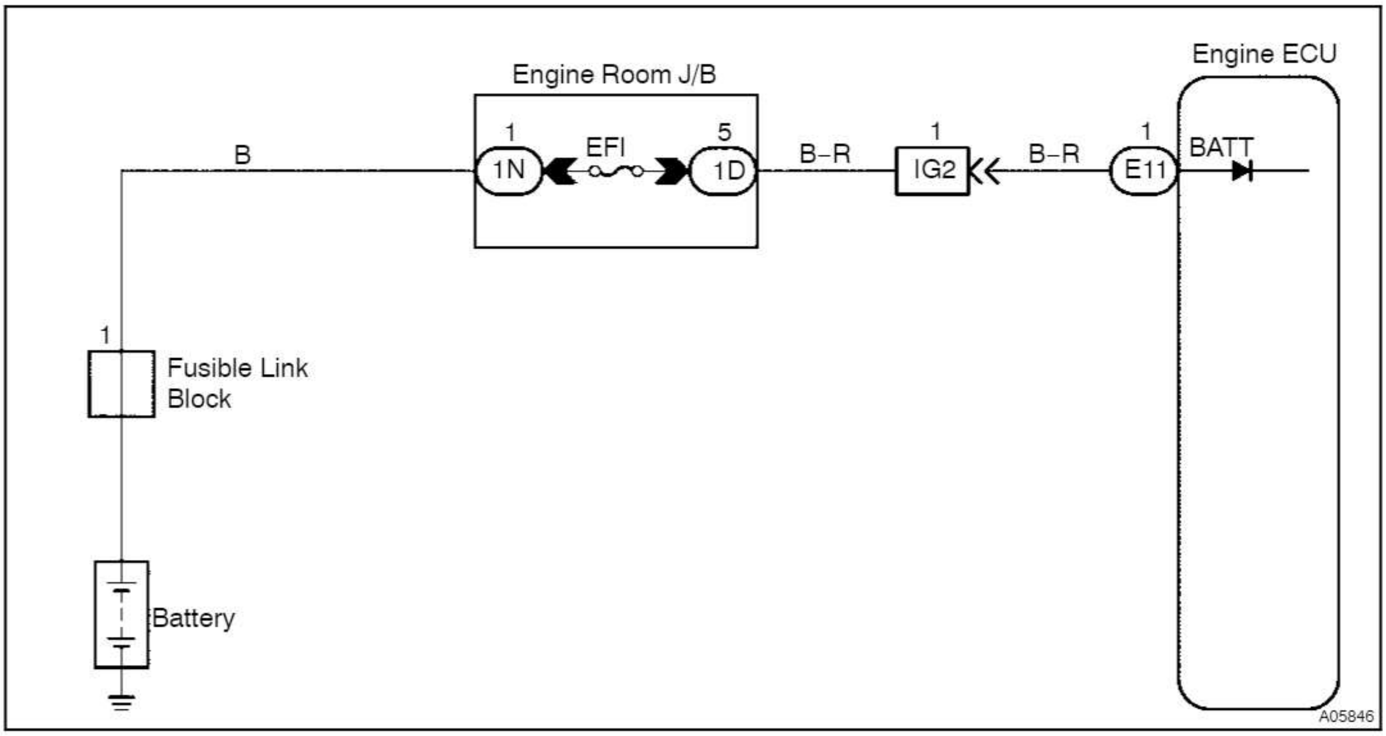

INSPECTION PROCEDURE

1	**Check voltage between terminal BATT of engine ECU connector and body ground.**

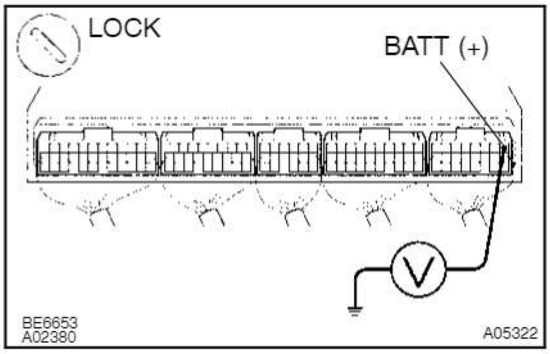

PREPARATION:

Remove the glove compartment door.

CHECK:

Measure voltage between terminal BATT of the engine ECU connector and body ground.

OK:

Voltage: 9 – 14 V

OK	**Check and replace engine ECU (See page IN–19).**

NG

2	**Check EFI fuse.**

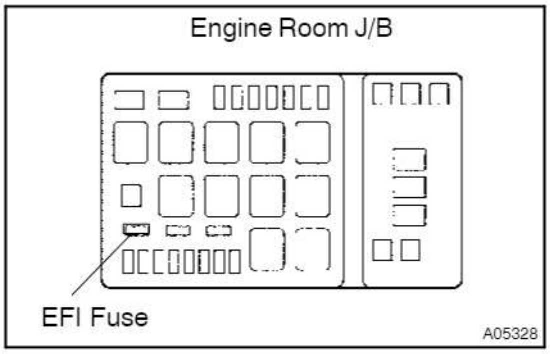

PREPARATION:

Remove the EFI fuse from the engine room J/B.

CHECK:

Check continuity of the EFI fuse.

OK:

Continuity

NG	**Check for short in all the harness and components connected to EFI fuse.**

OK

Check and repair or connector between battery, EFI fuse and engine ECU.

SUB FUEL TANK SYSTEM

HOW TO PROCEED WITH TROUBLESHOOTING

DI3PQ–01

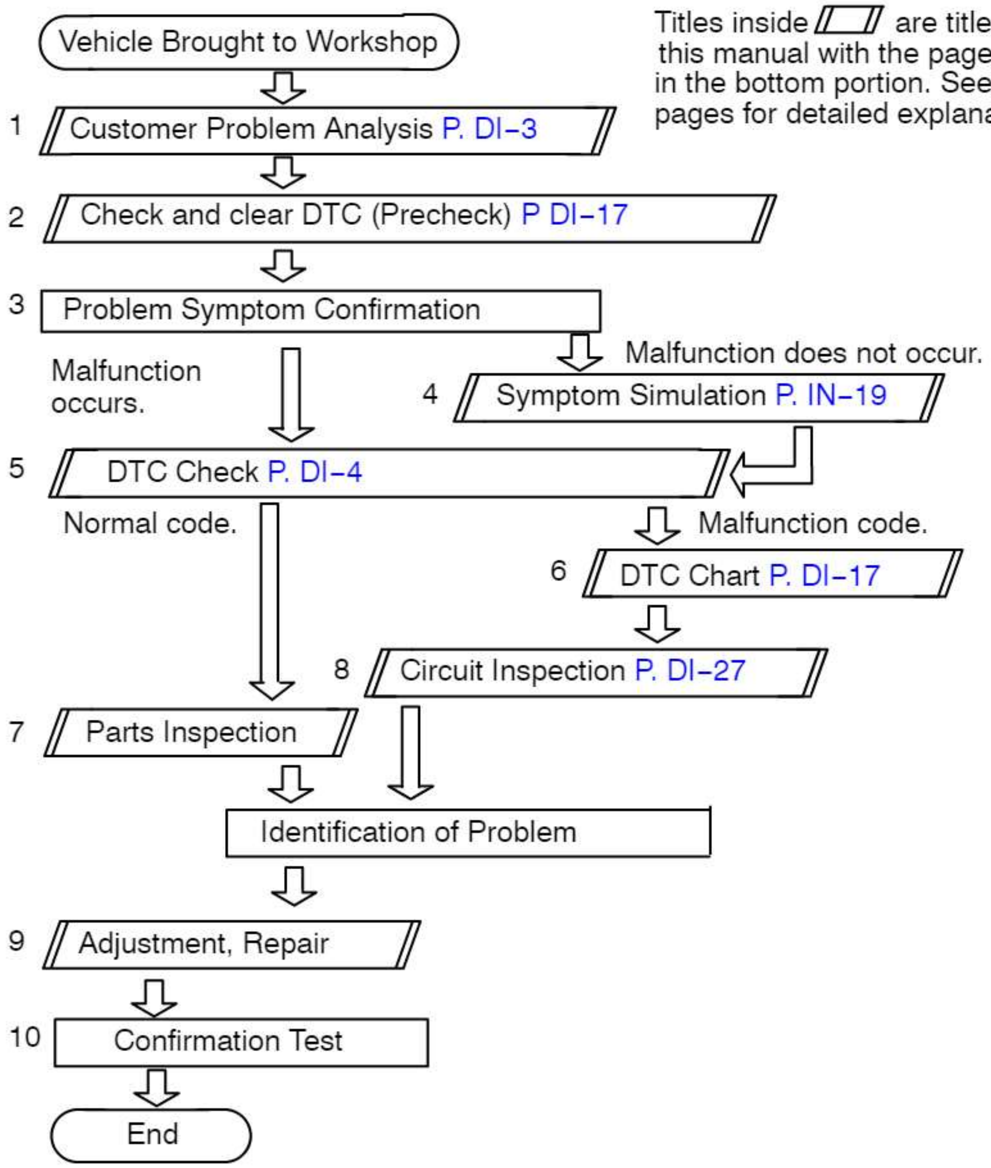

Titles inside ▱ are titles of pages in this manual with the page number indicated in the bottom portion. See the indicated pages for detailed explanations.

CUSTOMER PROBLEM ANALYSIS CHECK

SUB FUEL TANK SYSTEM Check Sheet

Inspector's Name ____________________

Customer's Name		Model and Model Year	
Driver's Name		Frame No.	
Date Vehicle Brought in		Engine Model	
License No.		Odometer Reading	km miles

Problem Symptoms	☐ Fuel Tank Changeover Switch is OFF	☐ Main fuel pump does not operate ☐ Main fuel pump and sub fuel pump operate simultaneously ☐ Sub fuel pump operate
	☐ Fuel Tank Changeover Switch is ON	☐ Sub fuel pump does not operate ☐ Main fuel pump and sub fuel pump operate simultaneously ☐ Main fuel pump operate
	☐ Others ____________________	

Dates Problem Occurred	
Problem Frequency	☐ Constant ☐ Sometimes (times per day/month) ☐ Once only ☐ Other ____________________

DTC Inspection	☐ Normal ☐ Malfunction code(s) (code)

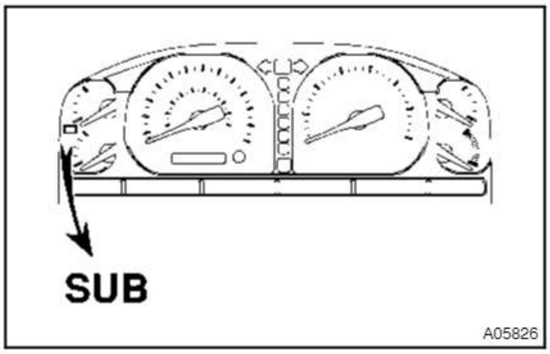

PRE–CHECK

1. DIAGNOSIS SYSTEM

(a) Check the indicator.

(1) Turn the ignition switch ON.

(2) Check that the sub fuel tank indicator lights come on immediately.

HINT:

- When the fuel tank changeover switch is pressed to side, the sub fuel tank indicator light continues to light up.
- When the sub fuel tank indicator light flashes at 0.5 seconds intervals, if indicates that the ECU stores the malfunction codes in memory.

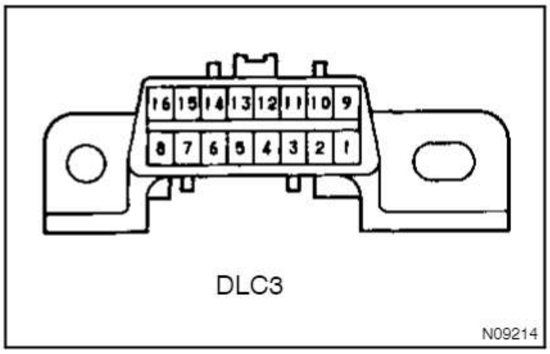

(b) Check the DTC.

(1) Turn the ignition switch ON.

(2) Using SST, connect between terminals 13 (TC) and 4 (CG) of DLC3.

SST 09843–18040

(3) Read the DTC output by sub fuel tank indicator.

HINT:

If a DTC is not indicated, check the TC terminal circuit (See page DI–137).

(4) Check details of the malfunction using the DTC chart on page DI–135.

(5) After completing the check, disconnect terminals 13 (TC) and 4 (CG).

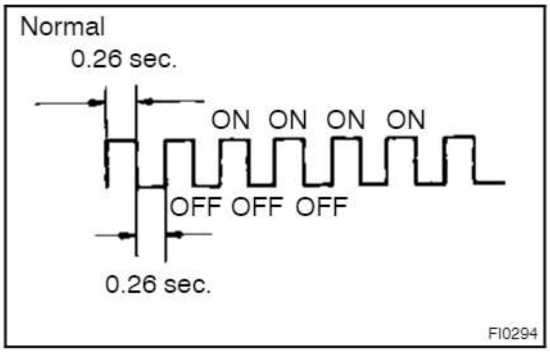

HINT:

If the even of 2 or more malfunction codes, indication will begin from the smaller numbered code and continue in order to the lager.

(c) Clear the DTC.

(1) After completing repairs, the DTC retained in memory can be cleared by removing the EFI and THROTTLE fuses for 10 seconds or more, with the ignition switch OFF.

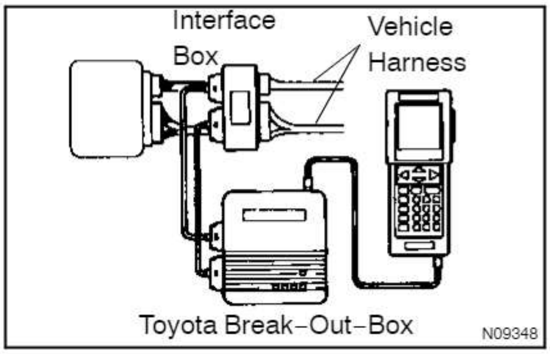

(2) Check that the normal code is displayed after connecting the fuse.

(d) Engine ECU Terminal Values Measurement Using Break–Out–Box and Hand–Held Tester

(1) Hook up the break–out–box and hand–held tester to the vehicle.

(2) Read the engine ECU input/output values by following the prompts on the tester screen.

HINT:

- Hand–held tester has a "Snapshot" function.
  This records the measured values and is effective in the diagnosis of intermittent problems.
- Please refer to the hand–held tester/break–out–box operator's manual for further details.

DIAGNOSTIC TROUBLE CODE CHART

SUB FUEL TANK TROUBLE CODES

HINT:

If a malfunction code is displayed during the DTC check, check the circuit for that code listed in the table below. For details of each code, turn to the page referred to under the "See Page" for the respective "DTC No." in the DTC chart.

DTC No. (See Page)	Detection Item	Trouble Area
11 (DI–138)	Main Fuel Pump Circuit Malfunction (Fuel tank changeover switch OFF)	• Open or short in main fuel pump circuit • Main fuel pump • Fuel tank select relay • Fuel pump relay • Circuit opening relay
13 (DI–146)	Fuel Tank Select Relay Malfunction	• Fuel tank select relay • Open or short in main fuel pump circuit • Main fuel pump • Fuel pump relay • Circuit opening relay • Short in sub fuel tank forcing driving relay circuit • Sub fuel tank forcing driving relay • Short in sub fuel pump circuit (+B short)
23 (DI–150)	Both Fuel Pump Simultaneous Operation Malfunction (Fuel tank changeover switch OFF)	• Short in sub fuel tank forcing driving relay circuit • Sub fuel tank forcing driving relay • Short in sub fuel pump circuit (+B short)
32 (DI–152)	Sub Fuel Pump Circuit Malfunction	• Open or short in sub fuel pump circuit • Sub fuel pump • Fuel tank select relay • Fuel pump relay • Circuit opening relay
42 (DI–155)	Fuel Tank Select Relay Circuit Malfunction (Fuel tank changeover switch ON)	• Open or short in fuel tank select relay circuit • Fuel tank select relay • Open or short in sub fuel pump circuit • Sub fuel pump • Short in main fuel pump circuit (+B short)
44 (DI–158)	Both Fuel Pump Simultaneous Operation Malfunction (Fuel tank changeover switch ON)	• Short in main fuel pump circuit (+B short) • Open or short in fuel tank select relay circuit • Fuel tank select relay • Short in sub fuel tank forcing driving relay circuit • Sub fuel tank forcing driving relay • Short in sub fuel pump circuit (+B short)

PARTS LOCATION

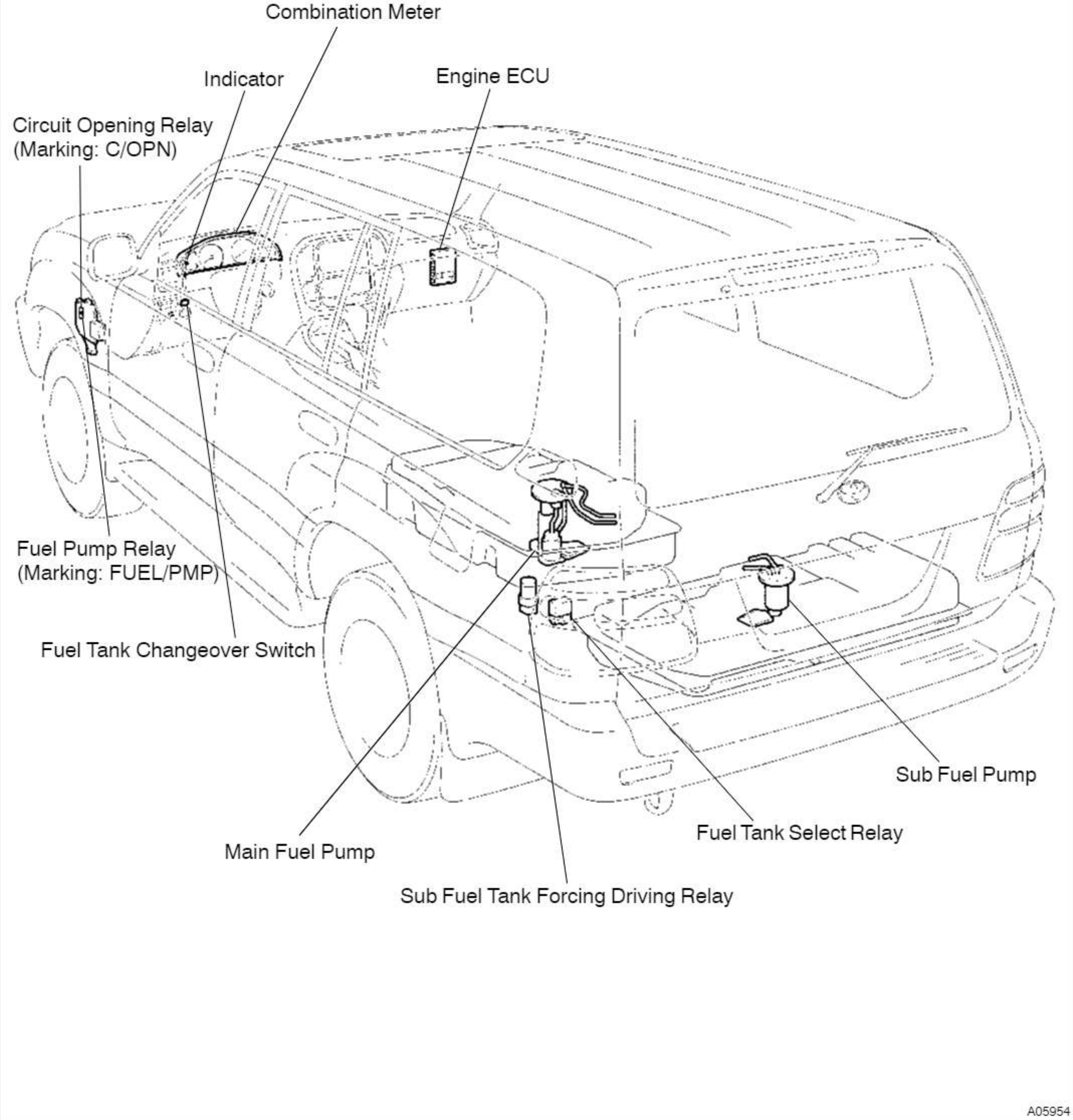

DI3PV–02

TERMINALS OF ECU

Engine ECU Terminals

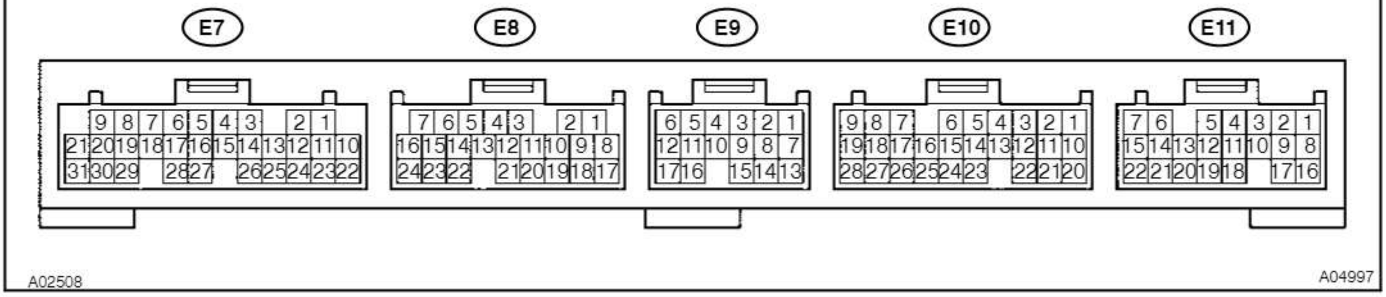

Symbols (Terminals No.)	Wiring Color	Condition	STD Voltage (V)
FPMS (E10–28) – E1 (E8–17)	L–W ↔ BR	IG switch ON Fuel tank changeover switch OFF	0 ~ 3.0
		IG switch ON Fuel tank changeover switch ON	9 ~ 14
FPM (E10–27) – E1 (E8–17)	B ↔ BR	Idling Fuel tank changeover switch OFF	9 ~ 14
		Idling Fuel tank changeover switch ON	0 ~ 3.0
FPMR (E10–18) – E1 (E8–17)	B–O ↔ BR	Idling Fuel tank changeover switch OFF	0 ~ 3.0
		Idling Fuel tank changeover switch ON	9 ~ 14
FPR (E11–4) – E01 (E7–21)	G–W ↔ W–B	IG switch ON	9 ~ 14
FPR2 (E10–7) – E01 (E7–21)	L ↔ W–B	Start engine and after 4.0 seconds or more	0 ~ 3.0
		Start engine Water temperature is 60°C (140°F) or more	0 ~ 3.0
		Start engine, after 1 second or more and 4 second or less Water temperature is 60°C (140°F) or less	9 ~ 14
FC (E11–5) – E01 (E7–21)	B–W ↔ W–B	IG switch ON	9 ~ 14
FPLD (E10–8) – E01 (E7–21)	O ↔ W–B	Idling Fuel tank changeover switch OFF	9 ~ 14
		Idling Fuel tank changeover switch ON	0 ~ 3.0

CIRCUIT INSPECTION

DTC	11	Main Fuel Pump Circuit Malfunction

CIRCUIT DESCRIPTION

When the STA signal and NE signal are input to the engine ECU, Tr1 is turned ON, current flows to coil of the circuit opening relay, relay switches on, power is supplied to the fuel pump via a pump select relay and the fuel pump operates.

When the fuel tank changeover switch is OFF, the pump select relay point contacts with the main fuel pump side, power is supplied to the main fuel pump and the main fuel pump operates.

When the fuel tank changeover switch is ON, current flows to coil of the pump select relay, relay point contacts with the sub fuel pump side, power supplied to the sub fuel pump and the sub fuel pump operates.

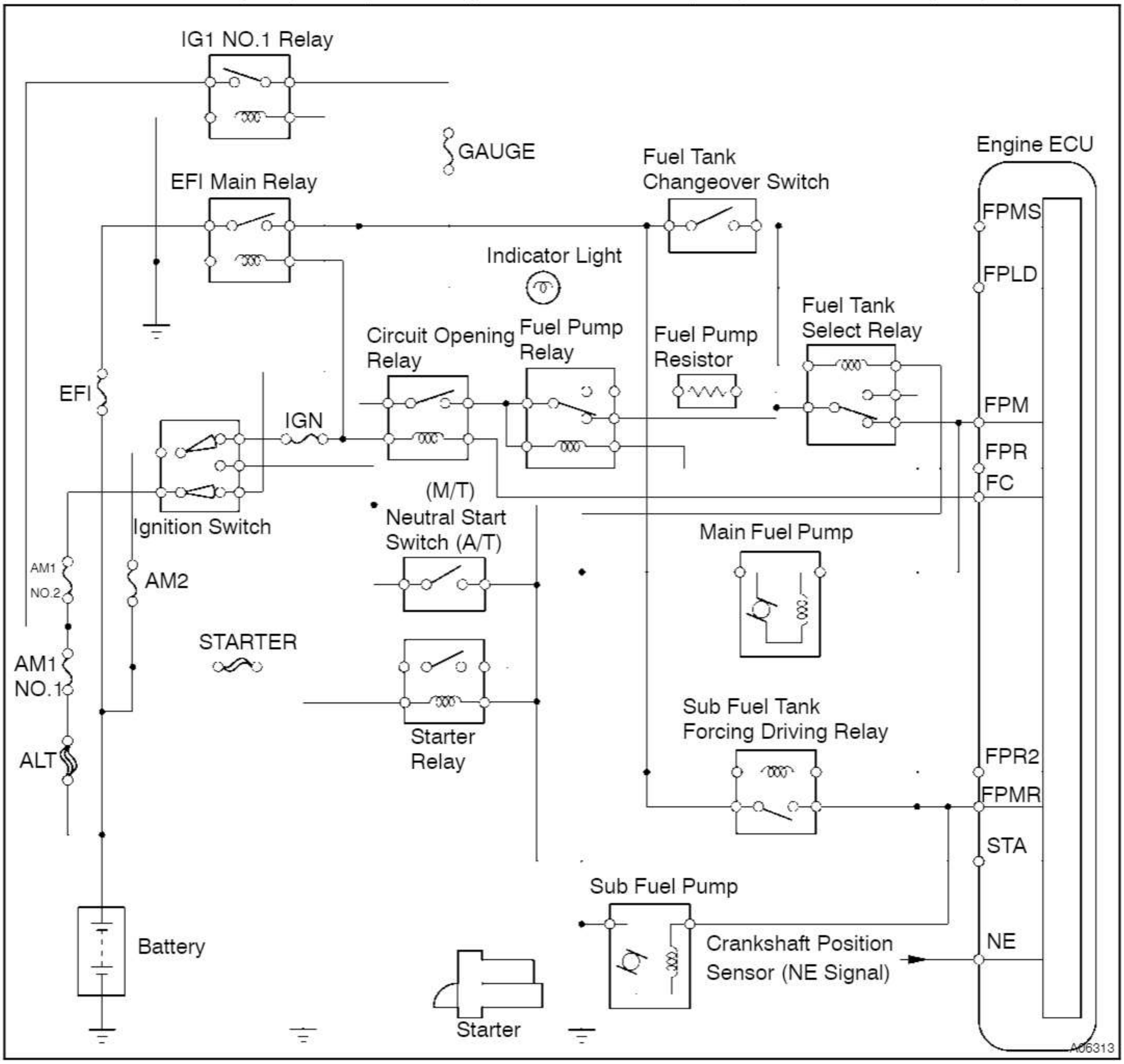

DTC No.	DTC Detecting Condition	Trouble Area
11	Conditions (a), (b) and (c) continue: (a) Fuel tank changeover switch OFF (Voltage of FPMS terminal is low) (b) Voltage of FPM1 terminal is low (c) Voltage of FPM2 terminal is low	• Open or short in main fuel pump circuit • Main fuel pump • Fuel tank select relay • Fuel pump relay • Circuit opening relay

WIRING DIAGRAM

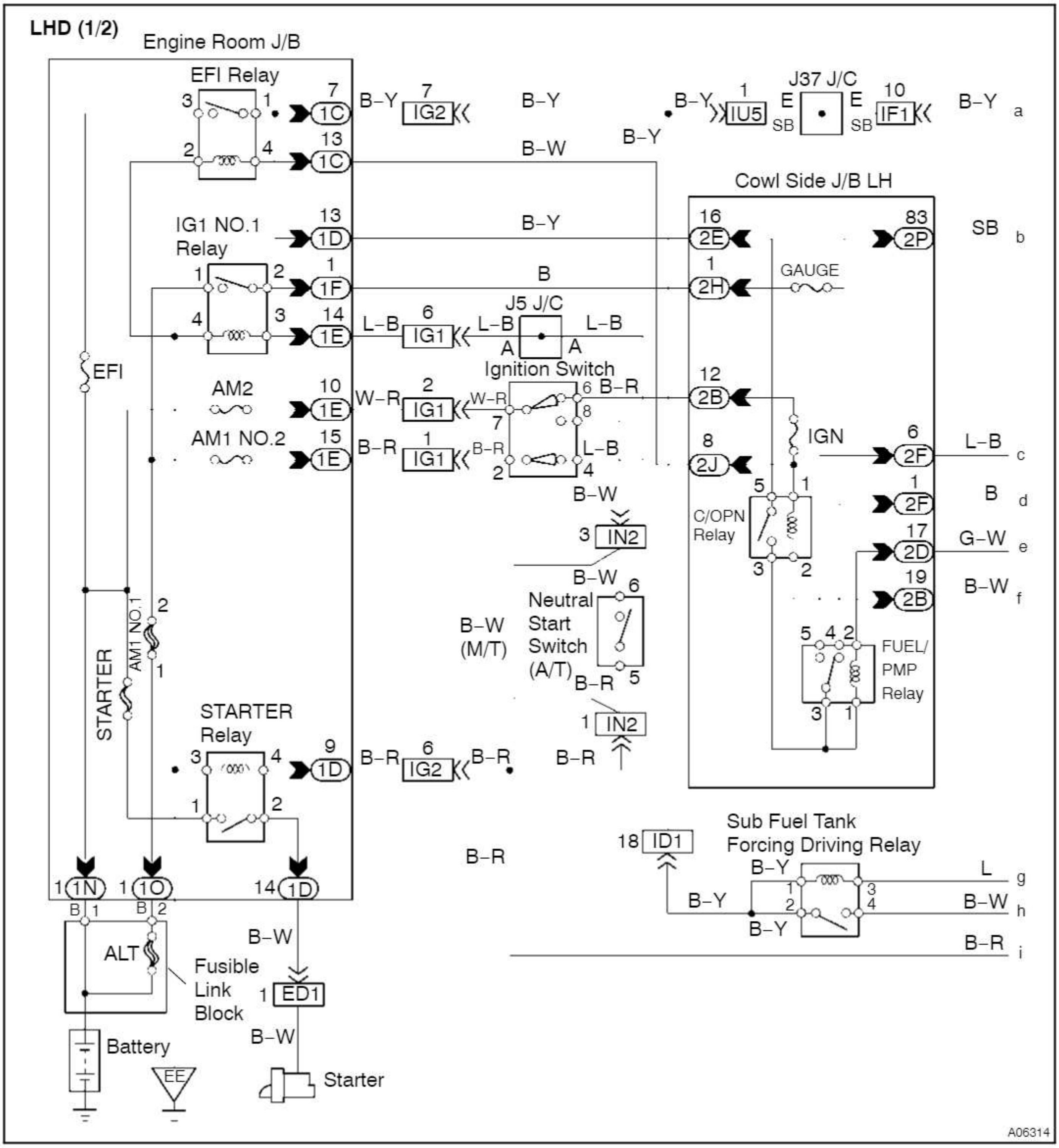

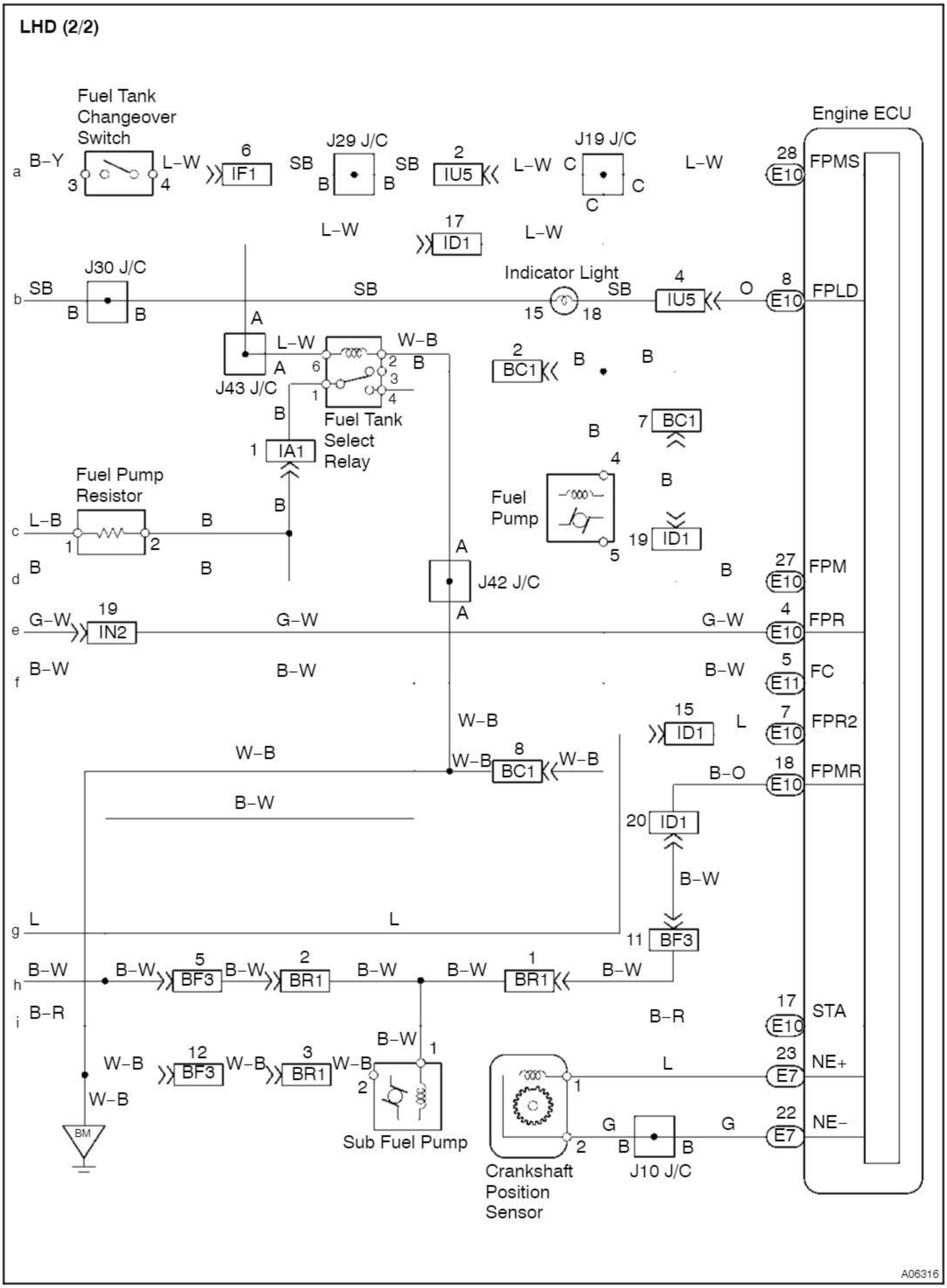
LHD (2/2)
Fuel Tank Changeover Switch
B–Y
L–W
3
4
6
IF1
J29 J/C
SB
B
2
IU5
L–W
J19 J/C
C
28
E10
FPMS
Engine ECU
17
ID1
J30 J/C
SB
Indicator Light
15
18
4
IU5
O
8
E10
FPLD
A
J43 J/C
6
1
2
3
4
W–B
Fuel Tank Select Relay
BC1
7
BC1
Fuel Pump
5
19
ID1
1
IA1
Fuel Pump Resistor
L–B
J42 J/C
27
E10
FPM
G–W
IN2
FPR
B–W
5
E11
FC
15
ID1
L
7
FPR2
BC1
B–O
18
FPMR
20
ID1
11
BF3
BF3
BR1
B–R
17
STA
12
BF3
BR1
Sub Fuel Pump
Crankshaft Position Sensor
23
E7
NE+
22
NE–
G
J10 J/C
BM
a
b
c
d
e
f
g
h
i
A06316

RHD (1/2)

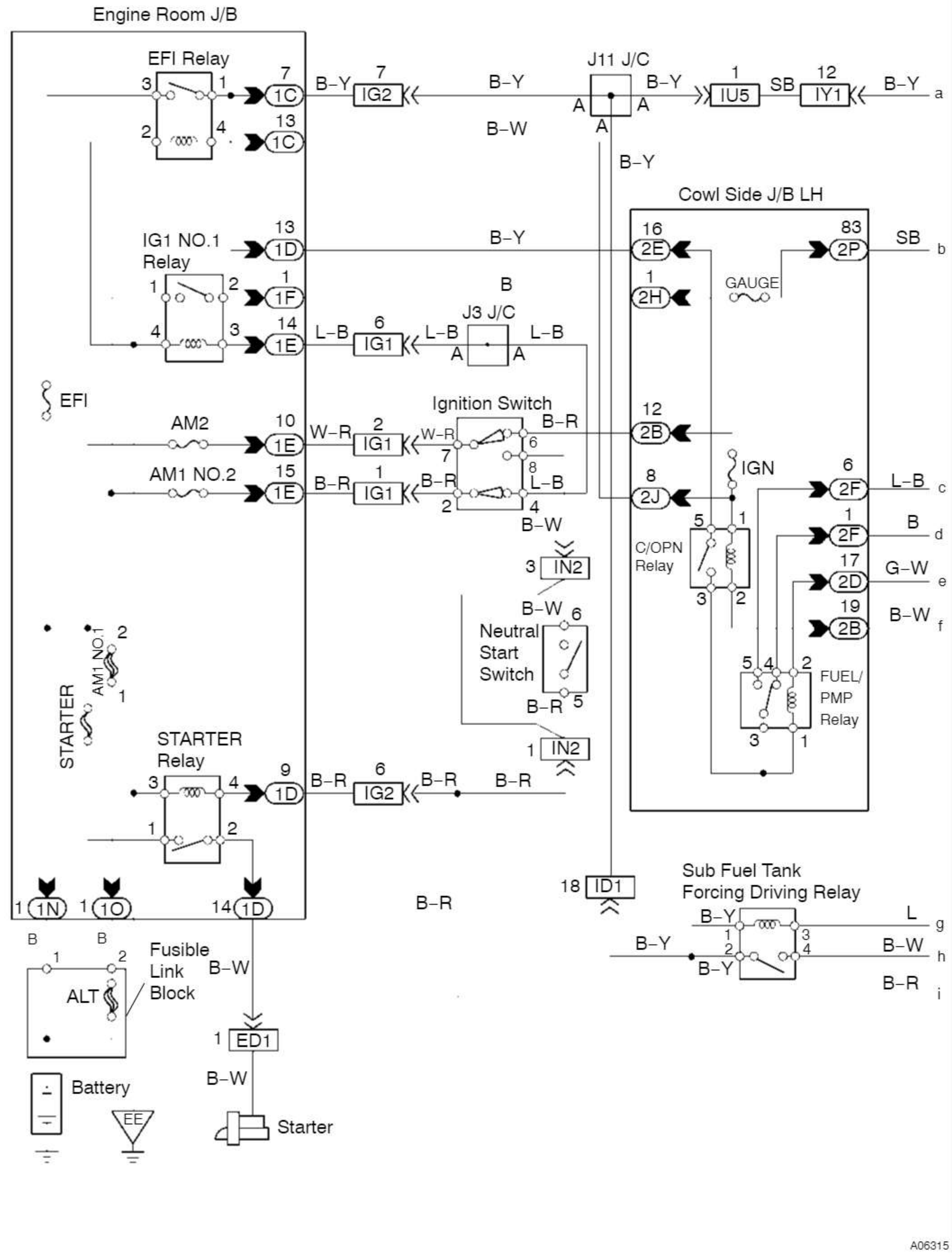
Engine Room J/B
EFI Relay
3
1
2
4
7
1C
13
1C
B–Y
7
IG2
B–Y
J11 J/C
A
A
A
B–Y
1
IU5
SB
12
IY1
B–Y
a
B–W
B–Y
Cowl Side J/B LH
IG1 NO.1 Relay
13
1D
B–Y
16
2E
83
2P
SB
b
1
2
1
1F
B
1
2H
GAUGE
J3 J/C
4
3
14
1E
L–B
6
IG1
L–B
A
A
L–B
EFI
Ignition Switch
AM2
10
1E
W–R
2
IG1
W–R
B–R
6
7
12
2B
IGN
8
AM1 NO.2
15
1E
B–R
1
IG1
B–R
L–B
2
4
8
2J
6
2F
L–B
c
B–W
5
1
C/OPN Relay
1
2F
B
d
3
IN2
17
2D
G–W
e
3
2
B–W
6
Neutral Start Switch
19
2B
B–W
f
AM1 NO.1
2
1
STARTER
5
4
2
FUEL/ PMP Relay
B–R
5
3
1
1
IN2
STARTER Relay
3
4
9
1D
B–R
6
IG2
B–R
B–R
1
2
18
ID1
Sub Fuel Tank Forcing Driving Relay
1
1N
1
1O
14
1D
B–R
B–Y
L
g
1
3
B–Y
2
4
B–W
h
B–Y
B–R
i
B
B
1
2
Fusible Link Block
B–W
ALT
1
ED1
B–W
Battery
EE
Starter
A06315

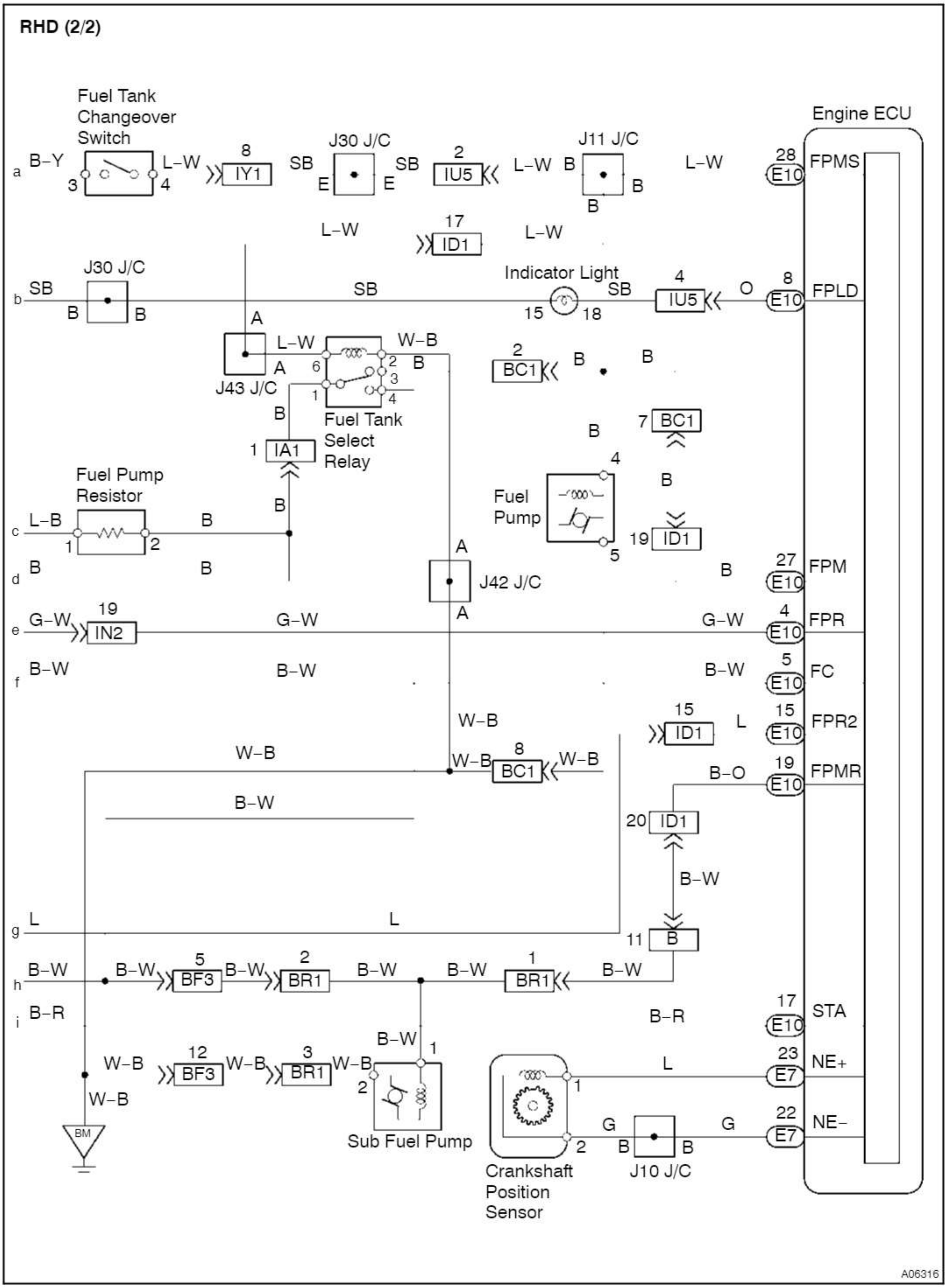
RHD (2/2)
Fuel Tank Changeover Switch
B–Y
L–W
IY1
J30 J/C
SB
E
IU5
J11 J/C
Engine ECU
FPMS
E10
ID1
Indicator Light
FPLD
O
J43 J/C
Fuel Tank Select Relay
W–B
BC1
IA1
Fuel Pump Resistor
L–B
Fuel Pump
J42 J/C
FPM
G–W
IN2
FPR
B–W
FC
FPR2
L
FPMR
B–O
BF3
BR1
B–R
STA
Sub Fuel Pump
Crankshaft Position Sensor
J10 J/C
E7
NE+
NE–
G
BM
a
b
c
d
e
f
g
h
i
A06316

INSPECTION PROCEDURE

1 Check voltage between terminal FPM of engine ECU connector and body ground.

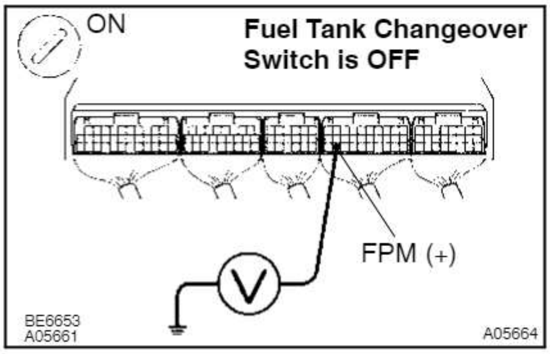

PREPARATION:

(a) Remove the glove compartment door.
(b) Turn the ignition switch ON.
(c) Fuel tank changeover switch is OFF.

CHECK:

Measure voltage between terminal FPM of engine ECU connector and bodyground.

OK:

Voltage: 9 – 14 V

OK **Go to step 5.**

NG

2 Check fuel tank select relay (See page FI–56).

NG **Replace fuel tank select relay.**

OK

3 Check fuel pump relay (Marking: FUEL/PMP) (See page FI–54).

NG **Replace fuel pump relay.**

OK

4 Check circuit opening relay (Marking:C/OPN) (See page FI–53).

NG **Replace circuit opening relay.**

OK

5 Check operation of main fuel pump.

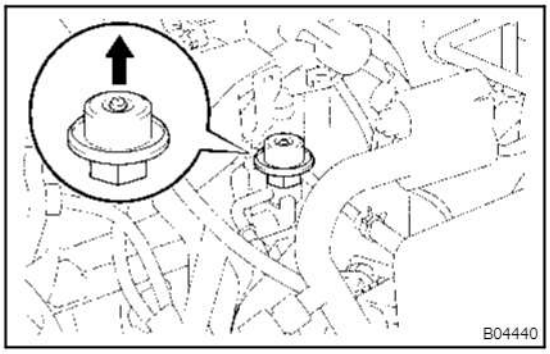

PREPARATION:
(a) Connect the hand–held tester to the DLC3.
(b) Turn the ignition switch ON.
(c) Fuel tank changeover switch is OFF.
(d) Select the ACTIVE TEST mode.

CHECK:
Check the main fuel pump operation, when it is operated by hand–held tester.

OK:
Here a main fuel pump operation noise

HINT:
If you have no hand–held tester, and then go to step 6.

OK **Go to step 8.**

NG

6 Check main fuel pump (See page FI–7).

NG **Replace main fuel pump.**

OK

7 Check for open or short in harness and connector between main fuel pump and fuel tank select relay, fuel tank select relay and fuel pump relay, fuel pump relay and circuit opening relay (See page IN–19).

NG **Repair or replace.**

OK

8	**Check for open and short in harness and connector between fuel tank select relay and engine ECU (See page IN–19).**

NG → **Repair or replace harness and connector.**

OK

Check and replace engine ECU.
(See page IN–19)

DI3ME–02

DTC	13	Fuel Tank Select Relay Malfunction

CIRCUIT DESCRIPTION

Refer to DTC 11 (Main Fuel Pump Circuit Malfunction) on page DI–138.

DTC No.	DTC Detecting Condition	Trouble Area
13	Conditions (a), (b) and (c) continue: (a) Fuel tank changeover switch OFF (Voltage of FPMS terminal is low) (b) Voltage of FPM terminal is low (c) Voltage of FPMR terminal is high	• Fuel tank select relay • Open or short in main fuel pump circuit • Main fuel pump • Fuel pump relay • Circuit opening relay • Short in sub fuel tank forcing driving relay circuit • Sub fuel tank forcing driving relay • Short in sub fuel pump circuit (+B short)

WIRING DIAGRAM

Refer to DTC 11 (Main Fuel Pump Circuit Malfunction) on page DI–138.

INSPECTION PROCEDURE

1	**Check fuel tank select relay (See page FI–56).**

NG → **Replace fuel tank select relay.**

OK

2	**Check voltage between terminal FPMR of engine ECU connector and body ground.**

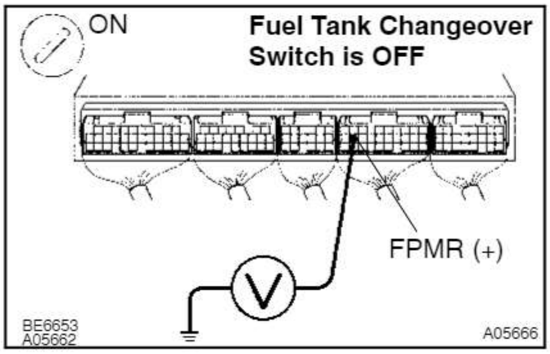

PREPARATION:

(a) Remove the glove compartment door.
(b) Turn the ignition switch ON.
(c) Fuel tank changeover switch is OFF.

CHECK:

Measure voltage between terminal FPMR of engine ECU and body ground, and turn the ignition switch ON after 4 seconds or more.

OK:

Voltage: 0 – 3.0 V

OK → **Go to step 5.**

NG

3 **Check sub fuel tank forcing driving relay (See page FI–58).**

NG **Replace sub fuel tank forcing driving relay, and then go to step 5.**

OK

4 **Check for short in harness and connector between sub fuel tank forcing driving relay and engine ECU (See page IN–19).**

NG **Repair or replace harness and connector, and then go to step 5.**

OK

Check and replace engine ECU (See page IN–19).

5 **Check voltage between terminal FPM of engine ECU connector and body ground (See page DI–138, step 1).**

OK **Go to step 8.**

NG

6 **Check fuel pump relay (Marking: FUEL/PMP) (See page FI–54).**

NG **Replace fuel pump relay.**

OK

7 **Check circuit opening relay (Marking: C/OPN) (See page FI–53).**

NG **Replace circuit opening relay.**

OK

8 **Check operation of main fuel pump (See page DI–138, step 5).**

HINT:
If you have no hand–held tester, and then go to step 9.

OK **Go to step 11.**

NG

9 **Check main fuel pump (See page FI–7).**

NG **Replace main fuel pump.**

OK

10 **Check for open or short in harness and connector between main fuel pump and fuel tank select relay, fuel tank select relay and fuel pump relay, fuel pump relay and circuit opening relay (See page IN–19).**

NG **Repair or replace.**

OK

11	**Check for open and short in harness and connector between fuel tank select relay and engine ECU (See page IN–19).**

NG → **Repair or replace harness and connector.**

OK

Check and replace engine ECU (See page IN–19).

DTC	23	Both Fuel Pump Simultaneous Operation Malfunction (*)

***: Fuel Tank Changeover Switch OFF**

CIRCUIT DESCRIPTION

Refer to DTC 11 (Main Fuel Pump Circuit Malfunction) on page DI–138.

DTC No.	DTC Detecting Item	Trouble Area
23	Conditions (a), (b) and (c) continue: (a) Fuel tank changeover switch OFF (Voltage of FPMS terminal is low) (b) Voltage of FPM terminal is high (c) Voltage of FPMR terminal is high	• Short in sub fuel tank forcing driving relay circuit • Sub fuel tank forcing driving relay • Short in sub fuel pump circuit (+B short)

WIRING DIAGRAM

Refer to DTC 11 (Main Fuel Pump Circuit Malfunction) on page DI–138.

INSPECTION PROCEDURE

1	**Check voltage between terminal FPMR of engine ECU connector and body ground (See page DI–146, step 2).**

OK → **Repair and replace harness and connector.**

NG

2	**Check sub fuel tank forcing driving relay (See page FI–58).**

NG → **Replace sub fuel tank forcing driving relay.**

OK

3 Check voltage between terminal FPR2 of engine ECU connector and body ground.

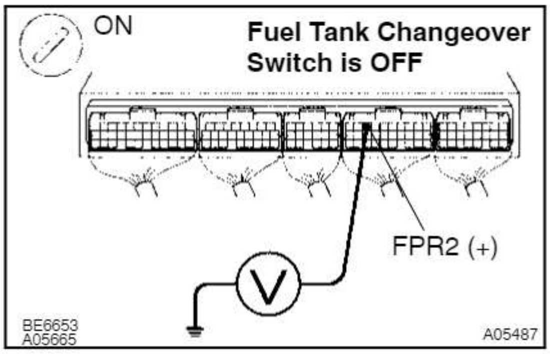

PREPARATION:

(a) Remove the glove compartment door.

(b) Turn the ignition switch ON.

(c) Fuel tank changeover switch is OFF.

CHECK:

Measure voltage between terminal FPR2 of engine ECU connector and body ground, and turn the ignition switch ON after 4 seconds.

OK:

Voltage: 9 – 14 V

NG **Go to step 4.**

OK

Check and repair harness and connector between sub fuel pump and sub fuel tank forcing driving relay (+B short circuit) (See page IN–19).

4 Check for short in harness and connector between sub fuel tank forcing driving relay and engine ECU (See page IN–19).

NG **Repair or replace.**

OK

Check and replace engine ECU (See page IN–19).

DI3MG–02

DTC	32	Sub Fuel Pump Circuit Malfunction

CIRCUIT DESCRIPTION

Refer to DTC 11 (Main Fuel Pump Circuit Malfunction) on page DI–138.

DTC No.	DTC Detecting Item	Trouble Area
32	Conditions (a), (b) and (c) continue: (a) Fuel tank changeover switch ON (Voltage of FPMS terminal is high) (b) Voltage of FPM terminal is low (c) Voltage of FPMR terminal is low	• Open or short in sub fuel pump circuit • Sub fuel pump • Fuel tank select relay • Fuel pump relay • Circuit opening relay

WIRING DIAGRAM

Refer to DTC 11 (Main Fuel Pump Circuit Malfunction) on page DI–138.

INSPECTION PROCEDURE

1	**Check voltage between terminal FPMR of engine ECU connector and body ground.**

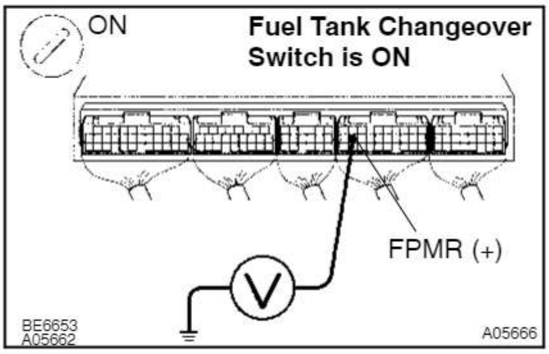

PREPARATION:

(a) Remove the glove compartment door.

(b) Turn the ignition switch ON.

(c) Push the fuel tank changeover switch ON.

CHECK:

Measure voltage between terminal FPMR of engine ECU and body ground, turn the ignition switch ON after 4 seconds or more.

OK:

Voltage: 9 – 14 V

OK	**Go to step 5.**

NG

2	**Check fuel tank select relay (See page FI–56).**

NG	**Replace fuel tank select relay.**

OK

3	**Check fuel pump relay (Marking: FUEL/PMP) (See page FI–54).**

NG **Replace fuel pump relay.**

OK

4	**Check circuit opening relay (Marking: C/OPN) (See page FI–53).**

NG **Replace circuit opening relay.**

OK

5	**Check operation of sub fuel pump.**

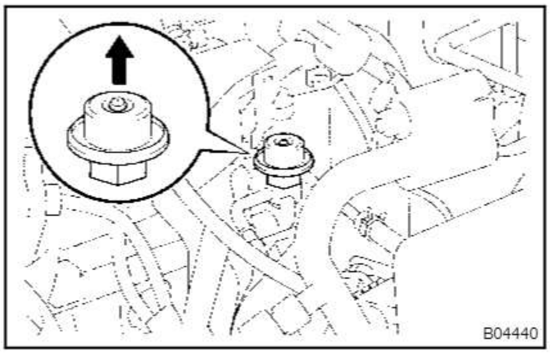

PREPARATION:

(a) Connect the hand–held tester to the DLC3.
(b) Turn the ignition switch ON.
(c) Push the fuel tank changeover switch ON.
(d) Select the ACTIVE TEST mode.

CHECK:

Check the sub fuel pump operation, when it is operated by hand–held tester.

OK:

Here a sub fuel pump operation noise

HINT:

If you have no hand–held tester, and then go to step 6.

OK **Go to step 7.**

NG

6	**Check sub fuel pump (See page FI–16).**

NG **Replace sub fuel pump.**

OK

7	**Check for open or short in harness and connector between sub fuel pump and fuel tank select relay, fuel tank select relay and fuel pump relay, fuel pump relay and circuit opening relay (See page IN–19).**

NG **Repair or replace.**

OK

8	**Check for open and short in harness and connector between fuel tank select relay and engine ECU (See page IN–19).**

NG **Repair or replace harness and conector.**

OK

Check and replace engine ECU (See page IN–19).

DI3MH–02

DTC 42 Fuel Tank Select Relay Circuit Malfunction

CIRCUIT DESCRIPTION

Refer to DTC 11 (Main Fuel Pump Circuit Malfunction) on page DI–138.

DTC No.	DTC Detecting Condition	Trouble Area
42	Conditions (a), (b) and (c) continue: (a) Fuel tank changeover switch ON (Voltage of FPMS terminal is high) (b) Voltage of FPM terminal is high (c) Voltage of FPMR terminal is low	• Open or short in fuel tank select relay circuit • Fuel tank select relay • Open or short in sub fuel pump circuit • Sub fuel pump • Short in main fuel pump circuit (+B short)

WIRING DIAGRAM

Refer to DTC 11 (Main Fuel Pump Circuit Malfunction) on page DI–138.

INSPECTION PROCEDURE

1 **Check fuel tank select relay (See page FI–56).**

NG **Replace fuel tank select relay.**

OK

2 **Check voltage between terminal FPMR of engine ECU connector and body ground (See page DI–152, step 1).**

OK **Go to step 4.**

NG

3 **Check for open and short in harness and connector between fuel tank changeover switch and fuel tank select relay, fuel tank select relay and body ground (See page IN–19).**

NG **Repair or replace harness and connector, and then go to step 8.**

OK

4 **Check operation of sub fuel pump (See page DI–152, step 5).**

HINT:
If you have no hand–held tester, and then go to step 5.

OK **Go to step 7.**

NG

5 **Check sub fuel pump (See page FI–16).**

NG **Replace sub fuel pump, and then go to step 8.**

OK

6 **Check for open or short in harness and connector between sub fuel pump and fuel tank select relay (See page IN–19).**

NG **Repair or replace, and then go to step 8.**

OK

7 **Check for open and short in harness and connector between fuel tank select relay and engine ECU, sub fuel tank forcing driving relay and engine ECU (See page IN–19).**

NG **Repair or replace, and then go to step 8.**

OK

8	**Check for short in harness and connector between main fuel pump and fuel tank select relay (+B short circuit) (See page IN–19).**

NG **Repair or replace harness and conector.**

OK

Check and replace engine ECU (See page IN–19).

DI3MI–02

DTC	44	Both Fuel Pump Simultaneous Operation Malfunction (*)

***: Fuel Tank Changeover Switch ON**

CIRCUIT DESCRIPTION

Refer to DTC 11 (Main Fuel Pump Circuit Malfunction) on page DI–138.

DTC No.	DTC Detecting Item	Trouble Area
44	Conditions (a), (b) and (c) continue: (a) Fuel tank changeover switch ON (Voltage of FPMS terminal is high) (b) Voltage of FPM terminal is high (c) Voltage of FPMR terminal is high	• Short in main fuel pump circuit (+B short) • Open or short in fuel tank select relay circuit • Fuel tank select relay • Short in sub fuel tank forcing driving relay circuit • Sub fuel tank forcing driving relay • Short in sub fuel pump circuit (+B short)

WIRING DIAGRAM

Refer to DTC 11 (Main Fuel Pump Circuit Malfunction) on page DI–138.

INSPECTION PROCEDURE

1	Check voltage between terminal FPM of engine ECU connector and body ground.

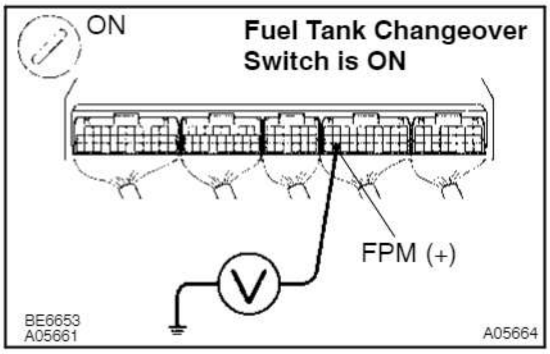

PREPARATION:

(a) Remove the glove compartment door.

(b) Turn the ignition switch ON.

(c) Push the fuel tank changeover switch ON.

CHECK:

Measure voltage between terminal FPM of engine ECU and body ground, turn the ignition switch ON after 4 seconds or more.

OK:

Voltage: 0 – 3.0 V

OK	Go to step 4.

NG

2	**Check fuel tank select relay (See page FI–56).**

NG ➔ **Replace fuel tank select relay, and then go to step 4.**

OK

3	**Check for open and short in harness and connector between fuel tank change-over switch and fuel tank select relay, fuel tank select relay and body ground (See page IN–19).**

NG ➔ **Repair or replace harness and connector, and then go to step 4.**

OK

4	**Check for short in harness and connector between fuel tank select relay and engine ECU, fuel tank select relay and main fuel pump (+B short circuit) (See page IN–19).**

NG ➔ **Repair or replace harness and conector.**

OK

5	**Check sub fuel tank forcing driving relay (See page FI–58).**

NG ➔ **Replace sub fuel tank forcing driving relay.**

OK

6 Check voltage between terminal FPR2 of engine ECU connector and body ground.

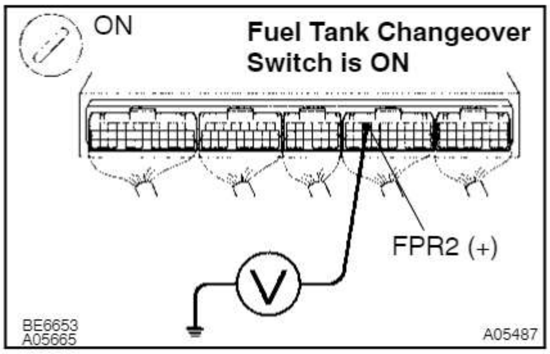

PREPARATION:

(a) Remove the glove compartment door.
(b) Turn the ignition switch ON.
(c) Push the fuel tank changeover switch ON.

CHECK:

Measure voltage between terminal FPR2 of engine ECU connector and body ground, turn the ignition switch ON after 4 seconds.

OK:

Voltage: 9 – 14 V

NG **Go to step 7.**

OK

Check and repair harness and connector between sub fuel pump and sub fuel tank forcing driving relay (+B short circuit) (See page IN–19).

7 Check for short in harness and connector between sub fuel tank forcing driving relay and engine ECU (See page IN–19).

NG **Repair or replace.**

OK

Check and replace engine ECU (See page IN–19).

CO (w/o TWC)

EM0TE–01

INSPECTION

HINT:

This check is used only to determine whether or not the idle CO complies with regulations.

1. **INITIAL CONDITIONS**

(a) Engine at normal operating temperature.
(b) Air cleaner installed.
(c) All pipes and hoses of air induction system connected.
(d) All accessories switched OFF.
(e) All vacuum lines properly connected.
(f) EFI system wiring connectors fully plugged.
(g) Ignition timing set correctly .
(h) Transmission in neutral range.
(i) Tachometer in neutral position.
(j) Tachometer and CO meter calibrated by hand.

2. **CHECK AND ADJUST CO CONCENTRATION AT IDLE**

NOTICE:

Always use a CO meter when adjusting the idle mixture. It is not necessary to adjust with the idle mixture screw in most vehicles if they are in good condition. if a CO meter is not available, Do NOT ATTEMPT TO ADJUST IDLE MIXTURE

(a) Race the engine at 2,500 rpm for approx.180 seconds.

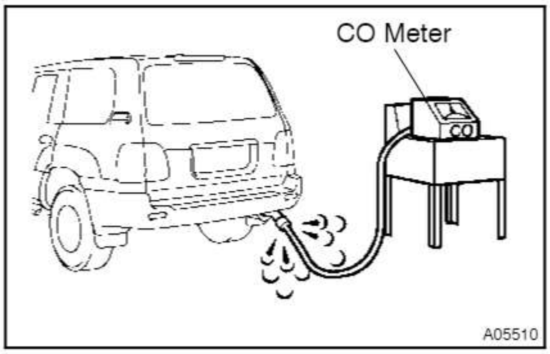

(b) Insert a tester probe at least 40 cm (1.3ft) into the tailpipe.
(c) Wait at least 1 minute before measuring to allow the concentration to stabilize. Complete the measuring with 3 minutes.
Idle CO concentration: 1.5 ± 0.5 %

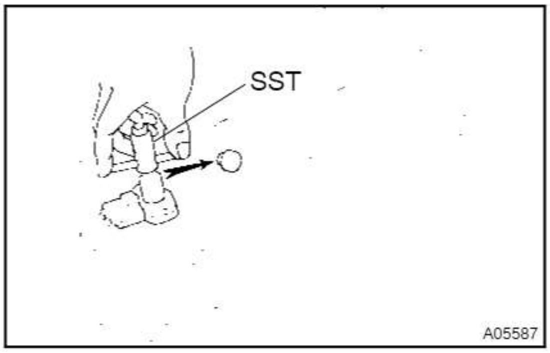

If the CO concentration dose not conform to regulations, adjust by turning the IDLE MIXTURE ADJUSTING SCREW in the variable resister with SST.

SST 09243–00020

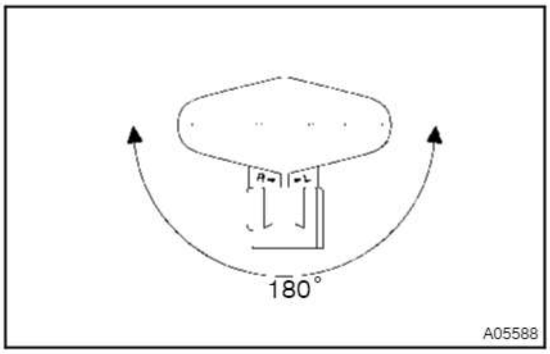

HINT:

The idle mixture adjusting screw can be tightened through on angle of 180°.

- If the CO concentration is within specification, this adjustments is complete.
- If the CO concentration can not be corrected by idle mixture adjustment, see the table below for other possible causes.

3. TROUBLESHOOTING

CO	Problems	Causes
High	Rough idle (Black smoke from exhaust)	1. Clogged air filter 2. Plugged PCV valve 3. Faulty EFI system: • Faulty pressure regulator • Clogged fuel return line • Defective water temperature sensor • Faulty engine ECU • Faulty injectors • Faulty throttle position sensor • Faulty air flow meter

CO/HC (w/ TWC)

INSPECTION

EM0TF–01

HINT:

This check is used only to determine whether or not the idle CO/HC complies with specifications.

1. **INITIAL CONDITIONS**

(a) Engine at normal operating temperature
(b) Air cleaner installed
(c) All pipes and hoses of air induction system connected
(d) All accessories switched OFF
(e) All vacuum lines properly connected
(f) EFI system wiring connectors fully plugged
(g) Ignition timing check correctly
(h) Transmission in neutral position
(i) Tachometer and CO/HC meter calibrated by hand

2. **START ENGINE**

3. **RACE ENGINE AT 2,500 RPM FOR APPOROX. 180 SECONDS**

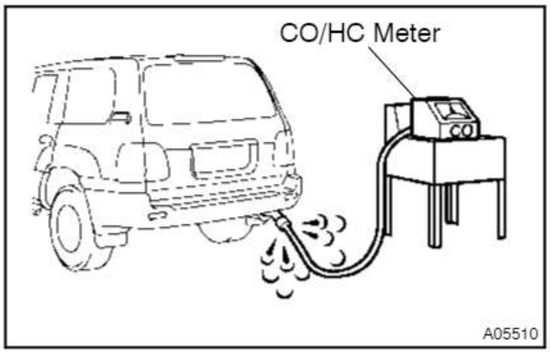

4. **INSERT CO/HC METER TESTING PROBE INTO TAILPIPE AT LEAST 40 cm (1.3 ft) DURING IDLING**

5. **CHECK CO/HC CONCENTRATION AT IDLE**

Idle CO concentration: 0 – 0.5 %

Idle HC concentration: Applicable local regulation

If the CO/HC concentration does not conform to specifications, perform troubleshooting in the order given below.

See the table next page for possible causes, and then inspect and correct the applicable causes if necessary.

HC	CO	Problems	Causes
Normal	High	Rough idle	1. Faulty ignition: • Incorrect timing • Fouled, shorted or improperly gapped plugs • Open or crossed high–tension cords 2. Incorrect valve clearance 3. Leaky EGR valve 4. Leaky intake and exhaust valves 5. Leaky cylinders
Low	High	Rough idle (Fluctuating HC reading)	1. Vacuum leaks: • PCV hoses • Intake manifold • Throttle body • Brake booster line 2. Lean mixture causing misfire
High	High	Rough idle (Black smoke from exhaust)	1. Restricted air filter 2. Plugged PCV valve 3. Faulty EFI systems: • Faulty pressure regulator • Defective water temperature sensor • Faulty engine ECU • Faulty injectors • Faulty throttle position sensor • Faulty vacuum sensor

COMPRESSION

EM0TG–01

INSPECTION

HINT:

If there is lack of power, excessive oil consumption or poor fuel economy, measure the compression pressure.

1. **WARM UP AND STOP ENGINE**

Allow the engine to warm up to normal operating temperature.

2. **REMOVE SPARK PLUGS**
   (See page IG–1)

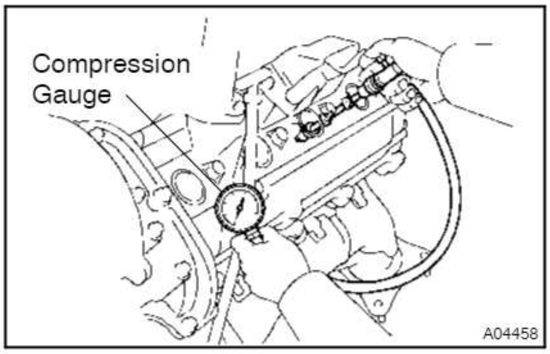

3. **CHECK CYLINDER COMPRESSION PRESSURE**

(a) Insert a compression gauge into the spark plug hole.

(b) Fully open the throttle.

(c) While cranking the engine, measure the compression pressure.

HINT:

Always use a fully charged battery to obtain engine speed of 250 rpm or more.

(d) Repeat steps (a) through (c) for each cylinder.

NOTICE:

This measurement must be done in as short a time as possible.

Compression pressure:
1,324 kPa (13.5 kgf/cm^2, 192 psi) or more
Minimum pressure:
981 kPa (10.0 kgf/cm^2, 142 psi)
Difference between each cylinder:
98 kPa (1.0 kgf/cm^2, 14 psi) or less

(e) If the cylinder compression in one or more cylinders is low, pour a small amount of engine oil into the cylinder through the spark plug hole and repeat steps (a) through (c) for cylinders with low compression.

- If adding oil helps the compression, chances are that the piston rings and/or cylinder bore are worn or damage.
- If pressure stays low, a valve may be sticking or seating is improper, or there may be leakage past the gasket.

4. **REINSTALL SPARK PLUGS**
   (See page IG–1)

VALVE CLEARANCE

EM0TH–01

INSPECTION

HINT:

Inspect and adjust the valve clearance when the engine is cold.

1. DRAIN ENGINE COOLANT

2. REMOVE BATTERY CLAMP COVER

3. REMOVE NO.3 TIMING BELT COVERS (See page EM–16)

4. REMOVE IGNITION COILS (See page IG–7)

5. REMOVE RH CYLINDER HEAD COVER

Remove the 9 bolts, 9 seal washers and cylinder head cover.

6. REMOVE LH CYLINDER HEAD COVER

(a) Remove the oil dipstick for the transmission.

(b) Disconnect the PCV hose.

(c) Disconnect the engine wire clamp from the wire bracket on the cylinder head cover.

(d) Remove the 9 bolts, 9 seal washers and cylinder head cover.

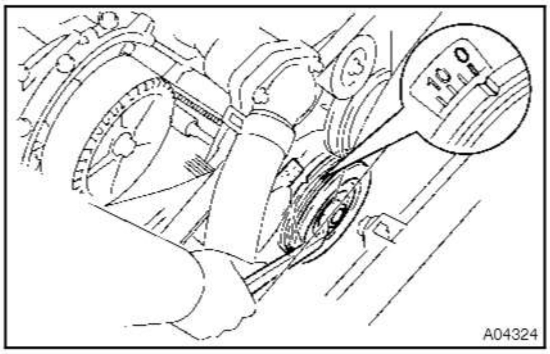

7. SET NO.1 CYLINDER TO TDC/COMPRESSION

(a) Turn the crankshaft pulley, and align its groove with timing mark "0" of the No.1 timing belt cover.

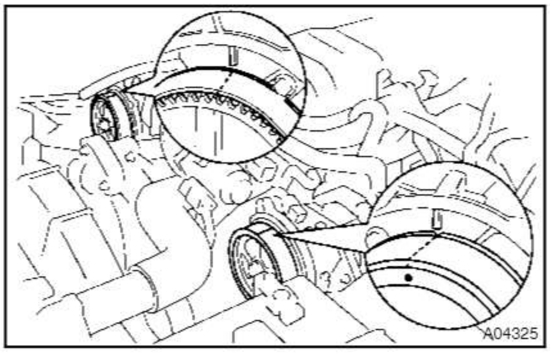

(b) Check that the timing marks of the camshaft timing pulleys and timing belt rear plates are aligned.

If not, turn the crankshaft 1 revolution (360°) and align the mark as above.

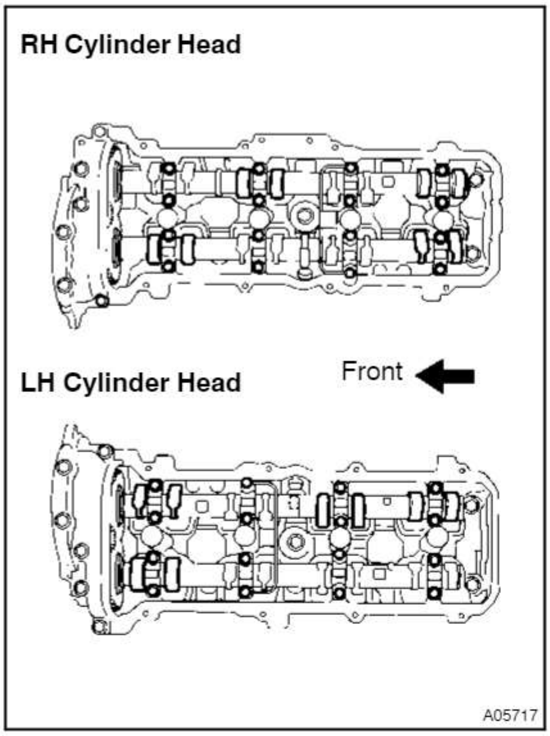

8. INSPECT VALVE CLEARANCE

(a) Check only the valves indicated.

- Using a feeler gauge, measure the clearance between the valve lifter and camshaft.
- Record the out–of–specification valve clearance measurements. They will be used later to determine the required replacement adjusting shim.

Valve clearance (Cold):
Intake: 0.15 – 0.25 mm (0.006 – 0.010 in.)
Exhaust: 0.25 – 0.35 mm (0.010 – 0.014 in.)

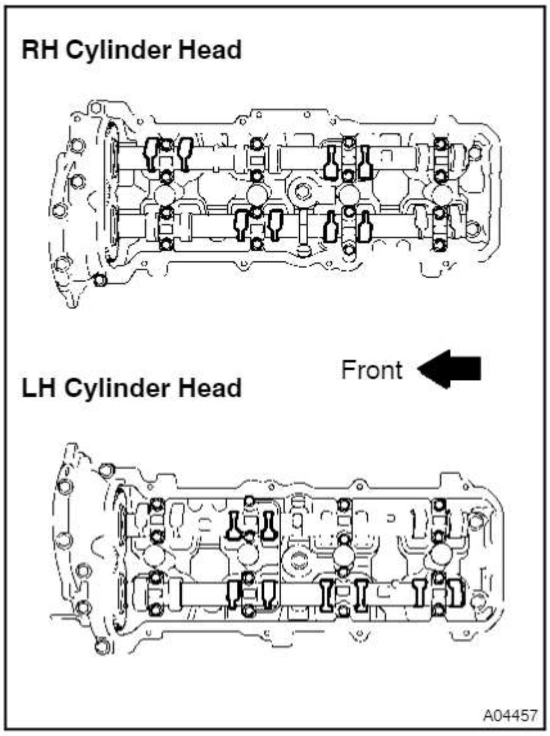

(b) Turn the crankshaft 1 revolution (360°) and align the mark as above. (See procedure in step 10)

(c) Check only the valves indicated as shown. Measure the valve clearance. (See procedure in step (a))

9. ADJUST VALVE CLEARANCE

(a) Remove the timing belt.
(See page EM–16)

(b) Remove the camshafts.
(See page EM–40)

(c) Remove the valve lifter and adjusting shim.

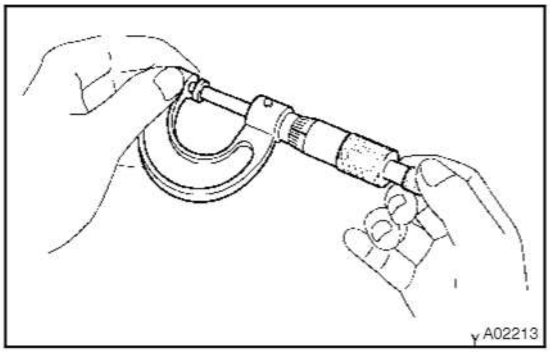

(d) Determine the replacement adjusting shim size according to these Formula or Charts:

- Using a micrometer, measure the thickness of the removed shim.
- Calculate the thickness of a new shim so that the valve clearance comes within the specified value.

T .... Thickness of removed shim
A .... Measured valve clearance
N .... Thickness of new shim

Intake:
N = T + (A – 0.20 mm (0.008 in.))
Exhaust:
N = T + (A – 0.30 mm (0.012 in.))

- Select a new shim with a thickness as close as possible to the calculated value.

HINT:
Shims are available in 41 increments of 0.020 mm (0.0008 in.), from 2.00 mm (0.0787 in.) to 2.80 mm (0.1102 in.).

(e) Place a new adjusting shim on the valve.
(f) Place the valve lifter.
(g) Reinstall the camshafts.
(See page EM–53)
(h) Reinstall the timing belt.
(See page EM–23)
(i) Recheck the valve clearance.

10. REINSTALL CYLINDER HEAD COVERS
11. REINSTALL IGNITION COILS
12. REINSTALL NO.3 TIMING BELT COVERS
(See page EM–23)
13. REFILL WITH ENGINE COOLANT
14. START ENGINE AND CHECK FOR LEAKS
15. RECHECK ENGINE COOLANT LEVEL
16. REINSTALL BATTERY CLAMP COVER

Adjusting Shim Selection Chart (Intake)

Installed shim thickness mm (in.) Measured clearance mm (in.)	2.000 (0.0787)	2.020 (0.0795)	2.040 (0.0803)	2.060 (0.0811)	2.080 (0.0819)	2.100 (0.0827)	2.120 (0.0835)	2.140 (0.0843)	2.160 (0.0850)	2.180 (0.0858)	2.200 (0.0866)	2.210 (0.0870)	2.220 (0.0874)	2.230 (0.0878)	2.240 (0.0882)	2.250 (0.0886)	2.260 (0.0890)	2.270 (0.0894)	2.280 (0.0898)	2.290 (0.0902)	2.300 (0.0906)	2.310 (0.0909)	2.320 (0.0913)	2.330 (0.0917)	2.340 (0.0921)	2.350 (0.0925)	2.360 (0.0929)	2.370 (0.0933)	2.380 (0.0937)	2.390 (0.0941)	2.400 (0.0945)	2.410 (0.0949)	2.420 (0.0953)	2.430 (0.0957)	2.440 (0.0961)	2.450 (0.0965)	2.460 (0.0969)	2.470 (0.0972)	2.480 (0.0976)	2.490 (0.0980)	2.500 (0.0984)	2.510 (0.0988)	2.520 (0.0992)	2.530 (0.0996)	2.540 (0.1000)	2.550 (0.1004)	2.560 (0.1008)	2.570 (0.1012)	2.580 (0.1016)	2.590 (0.1020)	2.600 (0.1024)	2.620 (0.1031)	2.640 (0.1039)	2.660 (0.1047)	2.680 (0.1055)	2.700 (0.1063)	2.720 (0.1071)	2.740 (0.1079)	2.760 (0.1087)	2.780 (0.1094)	2.800 (0.1102)
0.000-0.030 (0.0000-0.0012)							00	00	00	00	02	02	04	04	06	06	08	08	10	10	12	12	14	14	16	16	18	18	20	20	22	22	24	24	26	26	28	28	30	30	32	32	34	34	36	36	38	38	40	40	42	44	46	48	50	52	54	56	58	60	62
0.031-0.050 (0.0012-0.0020)						00	00	00	00	02	04	06	06	08	08	10	10	12	12	14	14	16	16	18	18	20	20	22	22	24	24	26	26	28	28	30	30	32	32	34	34	36	36	38	38	40	40	42	42	44	44	46	48	50	52	54	56	58	60	62	64
0.051-0.070 (0.0020-0.0028)					00	00	00	00	02	04	06	08	08	10	10	12	12	14	14	16	16	18	18	20	20	22	22	24	24	26	26	28	28	30	30	32	32	34	34	36	36	38	38	40	40	42	42	44	44	46	46	48	50	52	54	56	58	60	62	64	66
0.071-0.090 (0.0028-0.0035)				00	00	00	00	02	04	06	08	10	10	12	12	14	14	16	16	18	18	20	20	22	22	24	24	26	26	28	28	30	30	32	32	34	34	36	36	38	38	40	40	42	42	44	44	46	46	48	48	50	52	54	56	58	60	62	64	66	68
0.091-0.110 (0.0036-0.0043)			00	00	00	00	02	04	06	08	10	12	12	14	14	16	16	18	18	20	20	22	22	24	24	26	26	28	28	30	30	32	32	34	34	36	36	38	38	40	40	42	42	44	44	46	46	48	48	50	50	52	54	56	58	60	62	64	66	68	70
0.111-0.130 (0.0044-0.0051)		00	00	00	00	02	04	06	08	10	12	14	14	16	16	18	18	20	20	22	22	24	24	26	26	28	28	30	30	32	32	34	34	36	36	38	38	40	40	42	42	44	44	46	46	48	48	50	50	52	52	54	56	58	60	62	64	66	68	70	72
0.131-0.149 (0.0052-0.0059)		00	00	00	02	04	06	08	10	12	14	16	16	18	18	20	20	22	22	24	24	26	26	28	28	30	30	32	32	34	34	36	36	38	38	40	40	42	42	44	44	46	46	48	48	50	50	52	52	54	54	56	58	60	62	64	66	68	70	72	74
0.150-0.250 (0.0059-0.0098)																																																														
0.251-0.270 (0.0099-0.0106)	06	08	10	12	14	16	18	20	22	24	26	28	28	30	30	32	32	34	34	36	36	38	38	40	40	42	42	44	44	46	46	48	48	50	50	52	52	54	54	56	56	58	58	60	60	62	62	64	64	66	66	68	70	72	74	76	78	80	80	80	
0.271-0.290 (0.0107-0.0114)	08	10	12	14	16	18	20	22	24	26	28	30	30	32	32	34	34	36	36	38	38	40	40	42	42	44	44	46	46	48	48	50	50	52	52	54	54	56	56	58	58	60	60	62	62	64	64	66	66	68	68	70	72	74	76	78	80	80	80		
0.291-0.310 (0.0115-0.0122)	10	12	14	16	18	20	22	24	26	28	30	32	32	34	34	36	36	38	38	40	40	42	42	44	44	46	46	48	48	50	50	52	52	54	54	56	56	58	58	60	60	62	62	64	64	66	66	68	68	70	70	72	74	76	78	80	80	80			
0.311-0.330 (0.0122-0.0130)	12	14	16	18	20	22	24	26	28	30	32	34	34	36	36	38	38	40	40	42	42	44	44	46	46	48	48	50	50	52	52	54	54	56	56	58	58	60	60	62	62	64	64	66	66	68	68	70	70	72	72	74	76	78	80	80	80				
0.331-0.350 (0.0130-0.0138)	14	16	18	20	22	24	26	28	30	32	34	36	36	38	38	40	40	42	42	44	44	46	46	48	48	50	50	52	52	54	54	56	56	58	58	60	60	62	62	64	64	66	66	68	68	70	70	72	72	74	74	76	78	80	80	80					
0.351-0.370 (0.0138-0.0146)	16	18	20	22	24	26	28	30	32	34	36	38	38	40	40	42	42	44	44	46	46	48	48	50	50	52	52	54	54	56	56	58	58	60	60	62	62	64	64	66	66	68	68	70	70	72	72	74	74	76	76	78	80	80	80						
0.371-0.390 (0.0146-0.0154)	18	20	22	24	26	28	30	32	34	36	38	40	40	42	42	44	44	46	46	48	48	50	50	52	52	54	54	56	56	58	58	60	60	62	62	64	64	66	66	68	68	70	70	72	72	74	74	76	76	78	78	80	80	80							
0.391-0.410 (0.0154-0.0161)	20	22	24	26	28	30	32	34	36	38	40	42	42	44	44	46	46	48	48	50	50	52	52	54	54	56	56	58	58	60	60	62	62	64	64	66	66	68	68	70	70	72	72	74	74	76	76	78	78	80	80	80	80								
0.411-0.430 (0.0162-0.0169)	22	24	26	28	30	32	34	36	38	40	42	44	44	46	46	48	48	50	50	52	52	54	54	56	56	58	58	60	60	62	62	64	64	66	66	68	68	70	70	72	72	74	74	76	76	78	78	80	80	80	80	80									
0.431-0.450 (0.0170-0.0177)	24	26	28	30	32	34	36	38	40	42	44	46	46	48	48	50	50	52	52	54	54	56	56	58	58	60	60	62	62	64	64	66	66	68	68	70	70	72	72	74	74	76	76	78	78	80	80	80	80	80	80										
0.451-0.470 (0.0178-0.0185)	26	28	30	32	34	36	38	40	42	44	46	48	48	50	50	52	52	54	54	56	56	58	58	60	60	62	62	64	64	66	66	68	68	70	70	72	72	74	74	76	76	78	78	80	80	80	80	80	80	80											
0.471-0.490 (0.0185-0.0193)	28	30	32	34	36	38	40	42	44	46	48	50	50	52	52	54	54	56	56	58	58	60	60	62	62	64	64	66	66	68	68	70	70	72	72	74	74	76	76	78	78	80	80	80	80	80	80	80													
0.491-0.510 (0.0193-0.0201)	30	32	34	36	38	40	42	44	46	48	50	52	52	54	54	56	56	58	58	60	60	62	62	64	64	66	66	68	68	70	70	72	72	74	74	76	76	78	78	80	80	80	80	80	80	80															
0.511-0.530 (0.0201-0.0209)	32	34	36	38	40	42	44	46	48	50	52	54	54	56	56	58	58	60	60	62	62	64	64	66	66	68	68	70	70	72	72	74	74	76	76	78	78	80	80	80	80	80	80	80																	
0.531-0.550 (0.0209-0.0217)	34	36	38	40	42	44	46	48	50	52	54	56	56	58	58	60	60	62	62	64	64	66	66	68	68	70	70	72	72	74	74	76	76	78	78	80	80	80	80	80	80	80																			
0.551-0.570 (0.0217-0.0224)	36	38	40	42	44	46	48	50	52	54	56	58	58	60	60	62	62	64	64	66	66	68	68	70	70	72	72	74	74	76	76	78	78	80	80	80	80	80	80	80																					
0.571-0.590 (0.0225-0.0232)	38	40	42	44	46	48	50	52	54	56	58	60	60	62	62	64	64	66	66	68	68	70	70	72	72	74	74	76	76	78	78	80	80	80	80	80	80	80																							
0.591-0.610 (0.0233-0.0240)	40	42	44	46	48	50	52	54	56	58	60	62	62	64	64	66	66	68	68	70	70	72	72	74	74	76	76	78	78	80	80	80	80	80	80	80																									
0.611-0.630 (0.0241-0.0248)	42	44	46	48	50	52	54	56	58	60	62	64	64	66	66	68	68	70	70	72	72	74	74	76	76	78	78	80	80	80	80	80	80	80																											
0.631-0.650 (0.0248-0.0256)	44	46	48	50	52	54	56	58	60	62	64	66	66	68	68	70	70	72	72	74	74	76	76	78	78	80	80	80	80	80	80	80																													
0.651-0.670 (0.0256-0.0264)	46	48	50	52	54	56	58	60	62	64	66	68	68	70	70	72	72	74	74	76	76	78	78	80	80	80	80	80	80	80																															
0.671-0.690 (0.0264-0.0272)	48	50	52	54	56	58	60	62	64	66	68	70	70	72	72	74	74	76	76	78	78	80	80	80	80	80	80	80																																	
0.691-0.710 (0.0272-0.0280)	50	52	54	56	58	60	62	64	66	68	70	72	72	74	74	76	76	78	78	80	80	80	80	80	80	80																																			
0.711-0.730 (0.0280-0.0287)	52	54	56	58	60	62	64	66	68	70	72	74	74	76	76	78	78	80	80	80	80	80	80	80																																					
0.731-0.750 (0.0288-0.0295)	54	56	58	60	62	64	66	68	70	72	74	76	76	78	78	80	80	80	80	80	80	80																																							
0.751-0.770 (0.0296-0.0303)	56	58	60	62	64	66	68	70	72	74	76	78	78	80	80	80	80	80	80	80																																									
0.771-0.790 (0.0304-0.0311)	58	60	62	64	66	68	70	72	74	76	78	80	80	80	80	80	80	80																																											
0.791-0.810 (0.0311-0.0319)	60	62	64	66	68	70	72	74	76	78	80	80	80	80	80	80																																													
0.811-0.830 (0.0319-0.0327)	62	64	66	68	70	72	74	76	78	80	80	80	80	80																																															
0.831-0.850 (0.0327-0.0335)	64	66	68	70	72	74	76	78	80	80	80	80																																																	
0.851-0.870 (0.0335-0.0343)	66	68	70	72	74	76	78	80	80	80																																																				
0.871-0.890 (0.0343-0.0350)	68	70	72	74	76	78	80	80	80																																																					
0.891-0.910 (0.0351-0.0358)	70	72	74	76	78	80	80	80																																																						
0.911-0.930 (0.0359-0.0366)	72	74	76	78	80	80	80																																																							
0.931-0.950 (0.0367-0.0374)	74	76	78	80	80	80																																																								
0.951-0.970 (0.0374-0.0382)	76	78	80	80	80																																																									
0.971-0.990 (0.0382-0.0390)	78	80	80	80																																																										
0.991-1.010 (0.0390-0.0398)	80	80	80																																																											
1.011-1.030 (0.0398-0.0406)	80	80																																																												
1.031-1.050 (0.0406-0.0413)	80																																																														

Intake valve clearance (Cold):
0.15 – 0.25 mm (0.006 – 0.010 in.)

EXAMPLE:
The 2.300 mm (0.0906 in.) shim is installed, and the measured clearance is 0.440 mm (0.0173 in.). Replace the 2.300 mm (0.0906 in.) shim with a No. 54 shim.

New shim thickness mm (in.)

Shim No.	Thickness	Shim No.	Thickness	Shim No.	Thickness
00	2.000 (0.0787)	28	2.280 (0.0898)	56	2.560 (0.1008)
02	2.020 (0.0795)	30	2.300 (0.0906)	58	2.580 (0.1016)
04	2.040 (0.0803)	32	2.320 (0.0913)	60	2.600 (0.1024)
06	2.060 (0.0811)	34	2.340 (0.0921)	62	2.620 (0.1031)
08	2.080 (0.0819)	36	2.360 (0.0929)	64	2.640 (0.1039)
10	2.100 (0.0827)	38	2.380 (0.0937)	66	2.660 (0.1047)
12	2.120 (0.0835)	40	2.400 (0.0945)	68	2.680 (0.1055)
14	2.140 (0.0843)	42	2.420 (0.0953)	70	2.700 (0.1063)
16	2.160 (0.0850)	44	2.440 (0.0961)	72	2.720 (0.1071)
18	2.180 (0.0858)	46	2.460 (0.0969)	74	2.740 (0.1079)
20	2.200 (0.0866)	48	2.480 (0.0976)	76	2.760 (0.1087)
22	2.220 (0.0874)	50	2.500 (0.0984)	78	2.780 (0.1094)
24	2.240 (0.0882)	52	2.520 (0.0992)	80	2.800 (0.1102)
26	2.260 (0.0890)	54	2.540 (0.1000)		

A03111

Adjusting Shim Selection Chart (Exhaust)

Installed shim thickness mm (in.) / Measured clearance mm (in.)	2.000 (0.0787)	2.020 (0.0795)	2.040 (0.0803)	2.060 (0.0811)	2.080 (0.0819)	2.100 (0.0827)	2.120 (0.0835)	2.140 (0.0843)	2.160 (0.0850)	2.180 (0.0858)	2.200 (0.0866)	2.210 (0.0870)	2.220 (0.0874)	2.230 (0.0878)	2.240 (0.0882)	2.250 (0.0886)	2.260 (0.0890)	2.270 (0.0894)	2.280 (0.0898)	2.290 (0.0902)	2.300 (0.0906)	2.310 (0.0909)	2.320 (0.0913)	2.330 (0.0917)	2.340 (0.0921)	2.350 (0.0925)	2.360 (0.0929)	2.370 (0.0933)	2.380 (0.0937)	2.390 (0.0941)	2.400 (0.0945)	2.410 (0.0949)	2.420 (0.0953)	2.430 (0.0957)	2.440 (0.0961)	2.450 (0.0965)	2.460 (0.0969)	2.470 (0.0972)	2.480 (0.0976)	2.490 (0.0980)	2.500 (0.0984)	2.510 (0.0988)	2.520 (0.0992)	2.530 (0.0996)	2.540 (0.1000)	2.550 (0.1004)	2.560 (0.1008)	2.570 (0.1012)	2.580 (0.1016)	2.590 (0.1020)	2.600 (0.1024)	2.620 (0.1031)	2.640 (0.1039)	2.660 (0.1047)	2.680 (0.1055)	2.700 (0.1063)	2.720 (0.1071)	2.740 (0.1079)	2.760 (0.1087)	2.780 (0.1094)	2.800 (0.1102)
0.000–0.030 (0.0000–0.0012)												00	00	00	00	00	00	00	00	00	02	02	04	04	06	06	08	08	10	10	12	12	14	14	16	16	18	18	20	20	22	22	24	24	26	26	28	28	30	30	32	34	36	38	40	42	44	46	48	50	52
0.031–0.050 (0.0012–0.0020)											00	00	00	00	00	00	00	02	02	04	04	06	06	08	08	10	10	12	12	14	14	16	16	18	18	20	20	22	22	24	24	26	26	28	28	30	30	32	32	34	34	36	38	40	42	44	46	48	50	52	54
0.051–0.070 (0.0020–0.0028)										00	00	00	00	00	00	02	02	04	04	06	06	08	08	10	10	12	12	14	14	16	16	18	18	20	20	22	22	24	24	26	26	28	28	30	30	32	32	34	34	36	36	38	40	42	44	46	48	50	52	54	56
0.071–0.090 (0.0028–0.0035)									00	00	00	00	00	02	02	04	04	06	06	08	08	10	10	12	12	14	14	16	16	18	18	20	20	22	22	24	24	26	26	28	28	30	30	32	32	34	34	36	36	38	38	40	42	44	46	48	50	52	54	56	58
0.091–0.110 (0.0036–0.0043)								00	00	00	00	02	02	04	04	06	06	08	08	10	10	12	12	14	14	16	16	18	18	20	20	22	22	24	24	26	26	28	28	30	30	32	32	34	34	36	36	38	38	40	40	42	44	46	48	50	52	54	56	58	60
0.111–0.130 (0.0044–0.0051)							00	00	00	00	02	04	04	06	06	08	08	10	10	12	12	14	14	16	16	18	18	20	20	22	22	24	24	26	26	28	28	30	30	32	32	34	34	36	36	38	38	40	40	42	42	44	46	48	50	52	54	56	58	60	62
0.131–0.150 (0.0052–0.0059)						00	00	00	00	02	04	06	06	08	08	10	10	12	12	14	14	16	16	18	18	20	20	22	22	24	24	26	26	28	28	30	30	32	32	34	34	36	36	38	38	40	40	42	42	44	44	46	48	50	52	54	56	58	60	62	64
0.151–0.170 (0.0059–0.0067)					00	00	00	00	02	04	06	08	08	10	10	12	12	14	14	16	16	18	18	20	20	22	22	24	24	26	26	28	28	30	30	32	32	34	34	36	36	38	38	40	40	42	42	44	44	46	46	48	50	52	54	56	58	60	62	64	66
0.171–0.190 (0.0067–0.0075)				00	00	00	00	02	04	06	08	10	10	12	12	14	14	16	16	18	18	20	20	22	22	24	24	26	26	28	28	30	30	32	32	34	34	36	36	38	38	40	40	42	42	44	44	46	46	48	48	50	52	54	56	58	60	62	64	66	68
0.191–0.210 (0.0075–0.0083)			00	00	00	00	02	04	06	08	10	12	12	14	14	16	16	18	18	20	20	22	22	24	24	26	26	28	28	30	30	32	32	34	34	36	36	38	38	40	40	42	42	44	44	46	46	48	48	50	50	52	54	56	58	60	62	64	66	68	70
0.211–0.230 (0.0083–0.0091)		00	00	00	00	02	04	06	08	10	12	14	14	16	16	18	18	20	20	22	22	24	24	26	26	28	28	30	30	32	32	34	34	36	36	38	38	40	40	42	42	44	44	46	46	48	48	50	50	52	52	54	56	58	60	62	64	66	68	70	72
0.231–0.249 (0.0091–0.0098)		00	00	00	02	04	06	08	10	12	14	16	16	18	18	20	20	22	22	24	24	26	26	28	28	30	30	32	32	34	34	36	36	38	38	40	40	42	42	44	44	46	46	48	48	50	50	52	52	54	54	56	58	60	62	64	66	68	70	72	74
0.250–0.350 (0.0098–0.0138)																																																													
0.351–0.370 (0.0138–0.0146)	06	08	10	12	14	16	18	20	22	24	26	28	28	30	30	32	32	34	34	36	36	38	38	40	40	42	42	44	44	46	46	48	48	50	50	52	52	54	54	56	56	58	58	60	60	62	62	64	64	66	66	68	70	72	74	76	78	80	80	80	
0.371–0.390 (0.0146–0.0154)	08	10	12	14	16	18	20	22	24	26	28	30	30	32	32	34	34	36	36	38	38	40	40	42	42	44	44	46	46	48	48	50	50	52	52	54	54	56	56	58	58	60	60	62	62	64	64	66	66	68	68	70	72	74	76	78	80	80	80		
0.391–0.410 (0.0154–0.0161)	10	12	14	16	18	20	22	24	26	28	30	32	32	34	34	36	36	38	38	40	40	42	42	44	44	46	46	48	48	50	50	52	52	54	54	56	56	58	58	60	60	62	62	64	64	66	66	68	68	70	70	72	74	76	78	80	80	80			
0.411–0.430 (0.0162–0.0169)	12	14	16	18	20	22	24	26	28	30	32	34	34	36	36	38	38	40	40	42	42	44	44	46	46	48	48	50	50	52	52	54	54	56	56	58	58	60	60	62	62	64	64	66	66	68	68	70	70	72	72	74	76	78	80	80	80				
0.431–0.450 (0.0170–0.0177)	14	16	18	20	22	24	26	28	30	32	34	36	36	38	38	40	40	42	42	44	44	46	46	48	48	50	50	52	52	54	54	56	56	58	58	60	60	62	62	64	64	66	66	68	68	70	70	72	72	74	74	76	78	80	80	80					
0.451–0.470 (0.0178–0.0185)	16	18	20	22	24	26	28	30	32	34	36	38	38	40	40	42	42	44	44	46	46	48	48	50	50	52	52	54	54	56	56	58	58	60	60	62	62	64	64	66	66	68	68	70	70	72	72	74	74	76	76	78	80	80	80						
0.471–0.490 (0.0185–0.0193)	18	20	22	24	26	28	30	32	34	36	38	40	40	42	42	44	44	46	46	48	48	50	50	52	52	54	54	56	56	58	58	60	60	62	62	64	64	66	66	68	68	70	70	72	72	74	74	76	76	78	78	80	80	80							
0.491–0.510 (0.0193–0.0201)	20	22	24	26	28	30	32	34	36	38	40	42	42	44	44	46	46	48	48	50	50	52	52	54	54	56	56	58	58	60	60	62	62	64	64	66	66	68	68	70	70	72	72	74	74	76	76	78	78	80	80	80	80								
0.511–0.530 (0.0201–0.0209)	22	24	26	28	30	32	34	36	38	40	42	44	44	46	46	48	48	50	50	52	52	54	54	56	56	58	58	60	60	62	62	64	64	66	66	68	68	70	70	72	72	74	74	76	76	78	78	80	80	80	80	80									
0.531–0.550 (0.0209–0.0217)	24	26	28	30	32	34	36	38	40	42	44	46	46	48	48	50	50	52	52	54	54	56	56	58	58	60	60	62	62	64	64	66	66	68	68	70	70	72	72	74	74	76	76	78	78	80	80	80	80	80	80										
0.551–0.570 (0.0217–0.0224)	26	28	30	32	34	36	38	40	42	44	46	48	48	50	50	52	52	54	54	56	56	58	58	60	60	62	62	64	64	66	66	68	68	70	70	72	72	74	74	76	76	78	78	80	80	80	80	80	80	80											
0.571–0.590 (0.0225–0.0232)	28	30	32	34	36	38	40	42	44	46	48	50	50	52	52	54	54	56	56	58	58	60	60	62	62	64	64	66	66	68	68	70	70	72	72	74	74	76	76	78	78	80	80	80	80	80	80	80													
0.591–0.610 (0.0233–0.0240)	30	32	34	36	38	40	42	44	46	48	50	52	52	54	54	56	56	58	58	60	60	62	62	64	64	66	66	68	68	70	70	72	72	74	74	76	76	78	78	80	80	80	80	80	80	80															
0.611–0.630 (0.0241–0.0248)	32	34	36	38	40	42	44	46	48	50	52	54	54	56	56	58	58	60	60	62	62	64	64	66	66	68	68	70	70	72	72	74	74	76	76	78	78	80	80	80	80	80	80	80																	
0.631–0.650 (0.0248–0.0256)	34	36	38	40	42	44	46	48	50	52	54	56	56	58	58	60	60	62	62	64	64	66	66	68	68	70	70	72	72	74	74	76	76	78	78	80	80	80	80	80	80	80																			
0.651–0.670 (0.0256–0.0264)	36	38	40	42	44	46	48	50	52	54	56	58	58	60	60	62	62	64	64	66	66	68	68	70	70	72	72	74	74	76	76	78	78	80	80	80	80	80	80	80																					
0.671–0.690 (0.0264–0.0272)	38	40	42	44	46	48	50	52	54	56	58	60	60	62	62	64	64	66	66	68	68	70	70	72	72	74	74	76	76	78	78	80	80	80	80	80	80	80																							
0.691–0.710 (0.0272–0.0280)	40	42	44	46	48	50	52	54	56	58	60	62	62	64	64	66	66	68	68	70	70	72	72	74	74	76	76	78	78	80	80	80	80	80	80	80																									
0.711–0.730 (0.0280–0.0287)	42	44	46	48	50	52	54	56	58	60	62	64	64	66	66	68	68	70	70	72	72	74	74	76	76	78	78	80	80	80	80	80	80	80																											
0.731–0.750 (0.0288–0.0295)	44	46	48	50	52	54	56	58	60	62	64	66	66	68	68	70	70	72	72	74	74	76	76	78	78	80	80	80	80	80	80	80																													
0.751–0.770 (0.0296–0.0303)	46	48	50	52	54	56	58	60	62	64	66	68	68	70	70	72	72	74	74	76	76	78	78	80	80	80	80	80	80	80																															
0.771–0.790 (0.0304–0.0311)	48	50	52	54	56	58	60	62	64	66	68	70	70	72	72	74	74	76	76	78	78	80	80	80	80	80	80	80																																	
0.791–0.810 (0.0311–0.0319)	50	52	54	56	58	60	62	64	66	68	70	72	72	74	74	76	76	78	78	80	80	80	80	80	80	80																																			
0.811–0.830 (0.0319–0.0327)	52	54	56	58	60	62	64	66	68	70	72	74	74	76	76	78	78	80	80	80	80	80	80	80																																					
0.831–0.850 (0.0327–0.0335)	54	56	58	60	62	64	66	68	70	72	74	76	76	78	78	80	80	80	80	80	80	80																																							
0.851–0.870 (0.0335–0.0343)	56	58	60	62	64	66	68	70	72	74	76	78	78	80	80	80	80	80	80	80																																									
0.871–0.890 (0.0343–0.0350)	58	60	62	64	66	68	70	72	74	76	78	80	80	80	80	80	80	80																																											
0.891–0.910 (0.0351–0.0358)	60	62	64	66	68	70	72	74	76	78	80	80	80	80	80	80																																													
0.911–0.930 (0.0359–0.0366)	62	64	66	68	70	72	74	76	78	80	80	80	80	80																																															
0.931–0.950 (0.0367–0.0374)	64	66	68	70	72	74	76	78	80	80	80	80																																																	
0.951–0.970 (0.0374–0.0382)	66	68	70	72	74	76	78	80	80	80																																																			
0.971–0.990 (0.0382–0.0390)	68	70	72	74	76	78	80	80	80																																																				
0.991–1.010 (0.0390–0.0398)	70	72	74	76	78	80	80	80																																																					
1.011–1.030 (0.0398–0.0406)	72	74	76	78	80	80	80																																																						
1.031–1.050 (0.0406–0.0413)	74	76	78	80	80	80																																																							
1.051–1.070 (0.0414–0.0421)	76	78	80	80	80																																																								
1.071–1.090 (0.0422–0.0429)	78	80	80	80																																																									
1.091–1.110 (0.0430–0.0437)	80	80	80																																																										
1.111–1.130 (0.0437–0.0445)	80	80																																																											
1.131–1.150 (0.0445–0.0453)	80																																																													

Exhaust valve clearance (Cold):
0.25 – 0.35 mm (0.010 – 0.014 in.)

EXAMPLE:
The 2.300 mm (0.0906 in.) shim is installed, and the measured clearance is 0.440 mm (0.0173 in.). Replace the 2.300 mm (0.0906 in.) shim with a No. 44 shim.

New shim thickness

mm (in.)

Shim No.	Thickness	Shim No.	Thickness	Shim No.	Thickness
00	2.000 (0.0787)	28	2.280 (0.0898)	56	2.560 (0.1008)
02	2.020 (0.0795)	30	2.300 (0.0906)	58	2.580 (0.1016)
04	2.040 (0.0803)	32	2.320 (0.0913)	60	2.600 (0.1024)
06	2.060 (0.0811)	34	2.340 (0.0921)	62	2.620 (0.1031)
08	2.080 (0.0819)	36	2.360 (0.0929)	64	2.640 (0.1039)
10	2.100 (0.0827)	38	2.380 (0.0937)	66	2.660 (0.1047)
12	2.120 (0.0835)	40	2.400 (0.0945)	68	2.680 (0.1055)
14	2.140 (0.0843)	42	2.420 (0.0953)	70	2.700 (0.1063)
16	2.160 (0.0850)	44	2.440 (0.0961)	72	2.720 (0.1071)
18	2.180 (0.0858)	46	2.460 (0.0969)	74	2.740 (0.1079)
20	2.200 (0.0866)	48	2.480 (0.0976)	76	2.760 (0.1087)
22	2.220 (0.0874)	50	2.500 (0.0984)	78	2.780 (0.1094)
24	2.240 (0.0882)	52	2.520 (0.0992)	80	2.800 (0.1102)
26	2.260 (0.0890)	54	2.540 (0.1000)		

A03112

IGNITION TIMING

EM0TI–01

INSPECTION

1. REMOVE BATTERY CLAMP COVER

2. WARM UP ENGINE

Allow the engine to warm up to normal operating temperature.

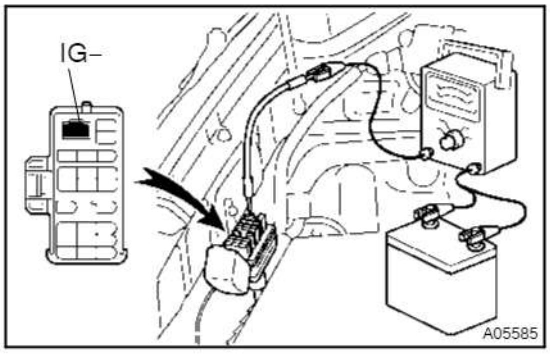

3. CONNECT TACHOMETER TO ENGINE

Connect the tester probe of a tachometer to terminal IG ⊖ of the check connecter.

NOTICE:

- **Never allow the tachometer terminal to touch ground as it could result in damage to the ignition coil.**
- **As some tachometers are not compatible with this ignition system, we recommend that you confirm the compatibility of your until before use.**

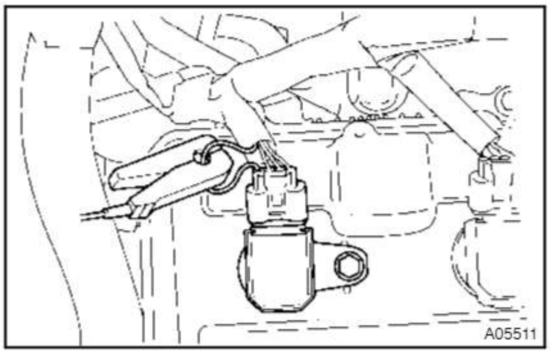

4. CONNECT TIMING LIGHT TO ENGINE

Connect the tester probe of a timing light to the wire of the ignition coil connector for No.1 cylinder.

5. CHECK IDLE SPEED

(a) Race the engine speed at 2,500 rpm for approx. 90 seconds.

(b) Check the idle speed.

Idle speed:
700 ± 50 rpm

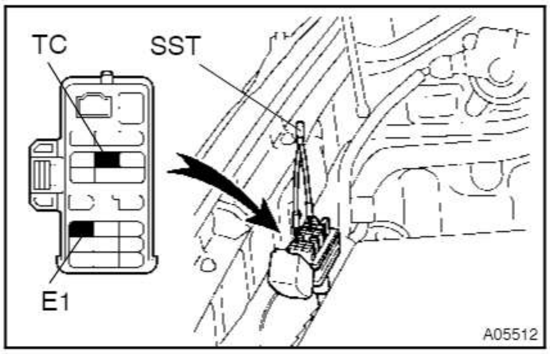

6. INSPECT IGNITION TIMING

(a) Using SST, connect terminals TC and E1 of the check connector.

SST 09843–18020

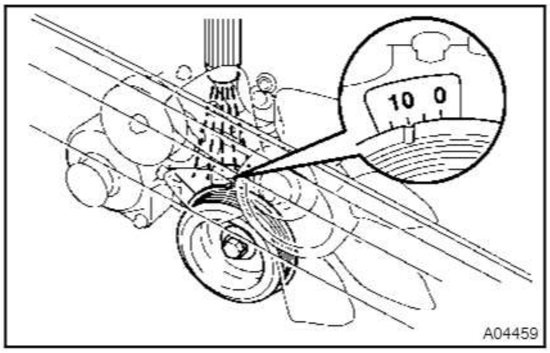

(b) Using a timing light, check the ignition timing.

Ignition timing:
5 – 15° BTDC @ idle
(Transmission in neutral position)

(c) Remove the SST from the check connecter.

SST 09843–18020

7. **DISCONNECT TIMING LIGHT FROM ENGINE**
8. **DISCONNECT TACHOMETER FROM ENGINE**
9. **REINSTALL BATTERY CLAMP COVER**

IDLE SPEED

EM0TJ–01

INSPECTION

1. **INITIAL CONDITIONS**

(a) Engine at normal operating temperature

(b) Air cleaner installed

(c) All pipes and hoses of air induction system connected

(d) All accessories switched OFF

(e) All vacuum lines properly connected

HINT:

All vacuum hoses should be properly connected.

(f) EFI system wiring connectors fully plugged

(g) Ignition timing set correctly

(h) Transmission in neutral position

(i) Air conditioning switched OFF

2. **CONNECT TACHOMETER**
(See page EM–11)

3. **INSPECT IDLE SPEED**

(a) Race the engine speed at 2,500 rpm for approx. 90 seconds.

(b) Check the idle speed.
Idle speed: 700 ± 50 rpm

If the idle speed is not as specified, check the air intake system.

4. **DISCONNECT TACHOMETER**

TIMING BELT

COMPONENTS

EM0TK–01

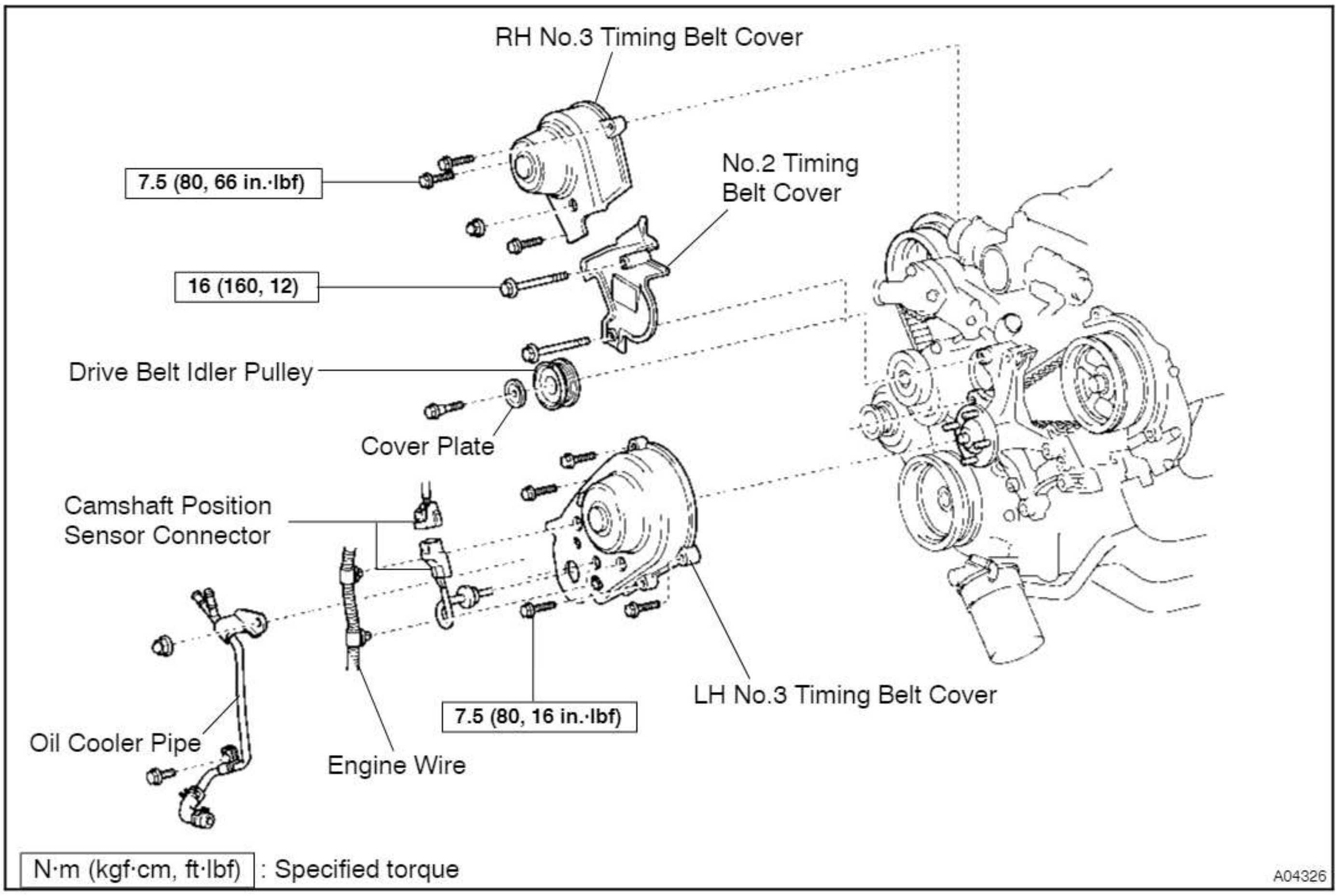

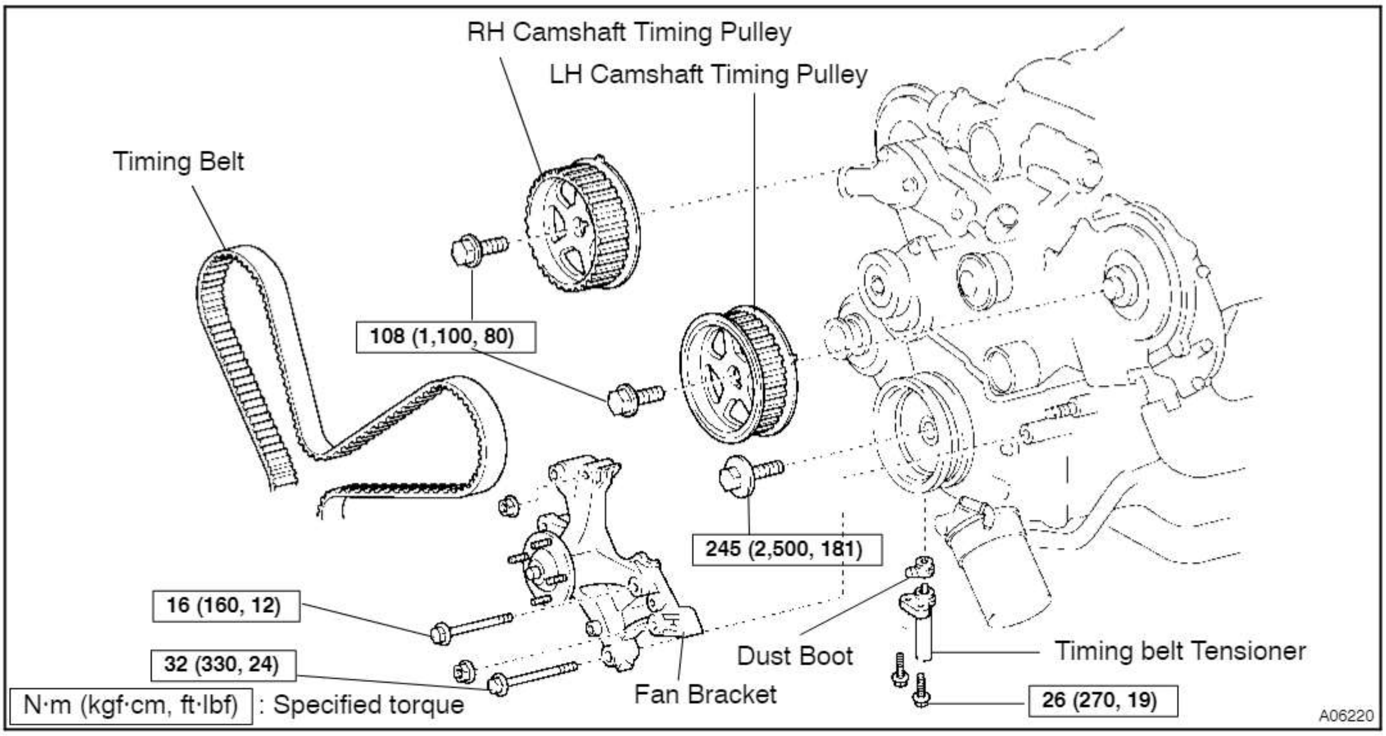

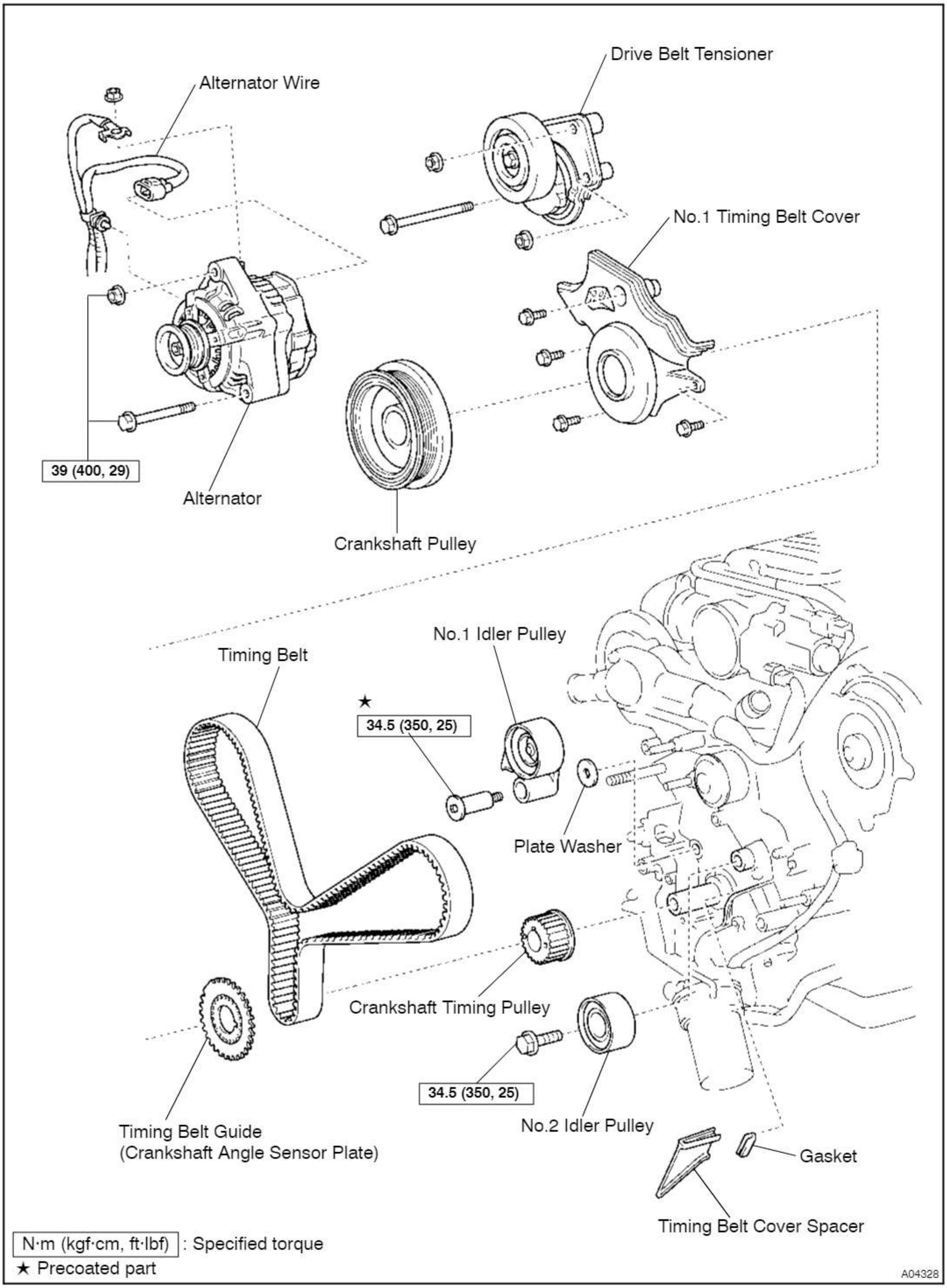
Drive Belt Tensioner
Alternator Wire
No.1 Timing Belt Cover
39 (400, 29)
Alternator
Crankshaft Pulley
No.1 Idler Pulley
Timing Belt
★
34.5 (350, 25)
Plate Washer
Crankshaft Timing Pulley
34.5 (350, 25)
No.2 Idler Pulley
Timing Belt Guide
(Crankshaft Angle Sensor Plate)
Gasket
Timing Belt Cover Spacer
N·m (kgf·cm, ft·lbf) : Specified torque
★ Precoated part
A04328

EM0TL–01

REMOVAL

1. DRAIN ENGINE COOLANT

2. REMOVE BATTERY CLAMP COVER

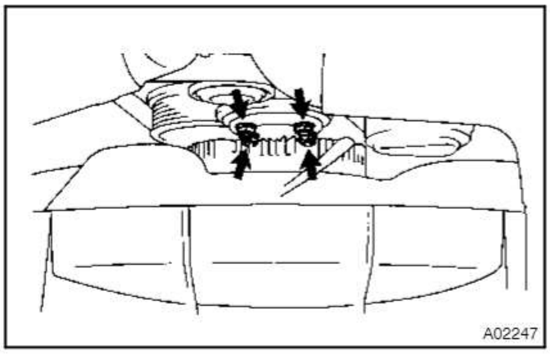

3. REMOVE DRIVE BELT, FAN, FLUID COUPLING AND FAN PULLEY

(a) Loosen the 4 nuts holding the fluid coupling to the fan bracket.

(b) Remove the alternator drive belt.

(c) Remove the 4 nuts, the fan, fluid coupling assembly and fan pulley.

4. REMOVE DRIVE BELT IDLER PULLEY

Remove the pulley bolt, cover plate and idler pulley.

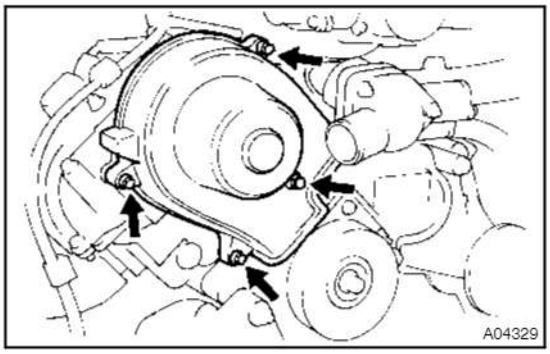

5. REMOVE RH NO.3 TIMING BELT COVER

Remove the 3 bolts,nut RH No.3 timing belt cover.

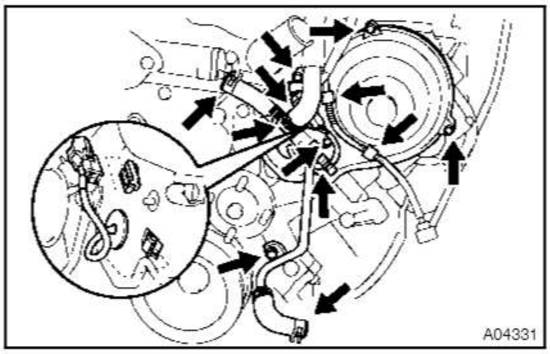

6. REMOVE LH NO.3 TIMING BELT COVER

(a) Disconnect the engine wire from the 2 wire clamps.

(b) Remove the 4 bolts and nut.

(c) Disconnect the camshaft position sensor wire from the wire clamp on the LH No.3 timing belt cover.

(d) Disconnect the sensor connector from the connector bracket.

(e) Disconnect the sensor connector.

(f) Remove the wire grommet from the LH No.3 timing belt cover.

(g) Remove the LH No.3 timing belt cover.

(h) Remove the oil cooler pipe and 2 bolts.

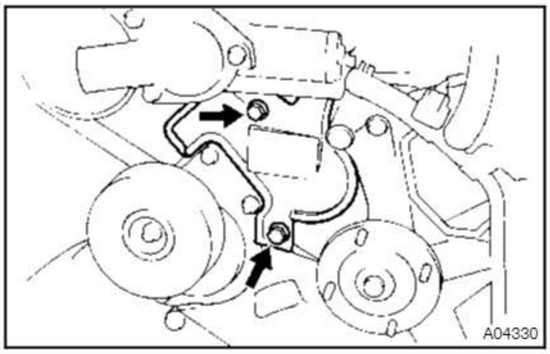

7. REMOVE NO.2 TIMING BELT COVER

Remove the 2 bolts and No.2 timing belt cover.

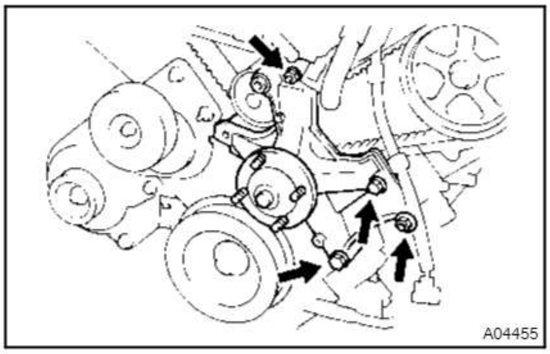

8. REMOVE FAN BRACKET

Remove the 2 bolts, 2 nuts and fan bracket.

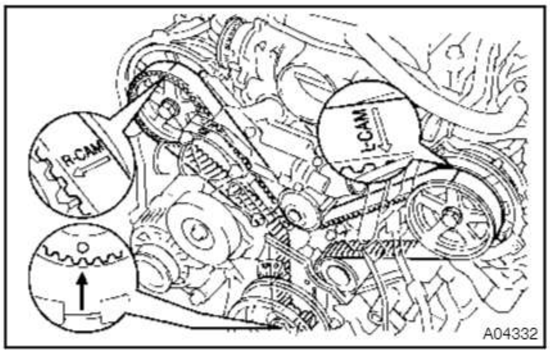

9. IF RE–USING TIMING BELT, CHECK INSTALLATION MARKS ON TIMING BELT

Check that there are 3 installation marks on the timing belt by turning the crankshaft pulley as shown in the illustration.

HINT:

If the installation marks have disappeared, place a new installation mark on the timing belt before removing each part.

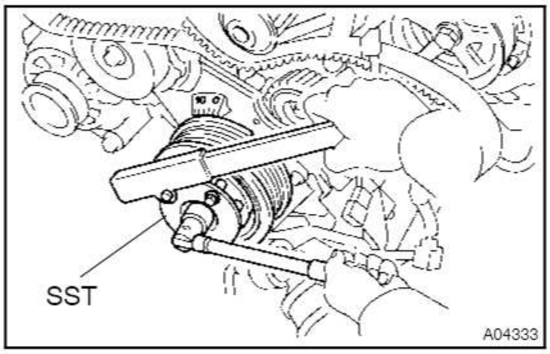

10. LOOSEN CRANKSHAFT PULLEY BOLT

Using SST, loosen the pulley bolt.

SST 09213–70010 (90105–08076),
09330–00021

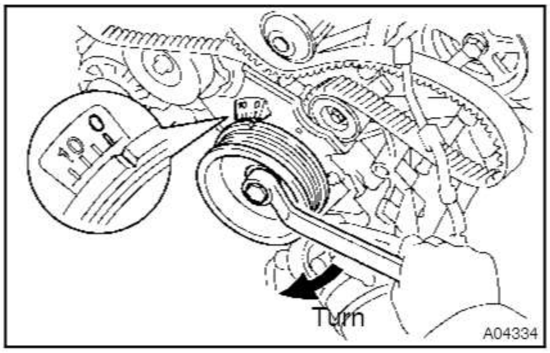

11. SET NO.1 CYLINDER TO APPROX. 50° ATDC/COMPRESSION

(a) Turn the crankshaft pulley and align its groove with timing mark "0" of the No.1 timing belt cover.

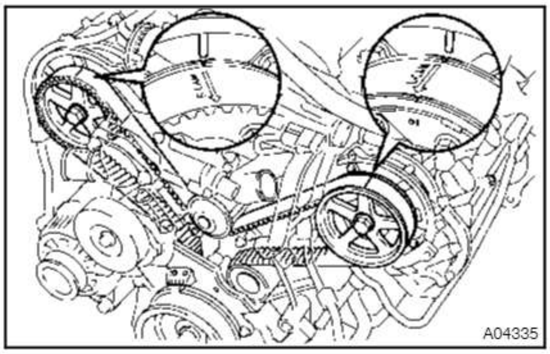

(b) Check that the timing marks of the camshaft timing pulleys and timing belt rear plates aligned.

If not, turn the crankshaft 1 revolution (360°).

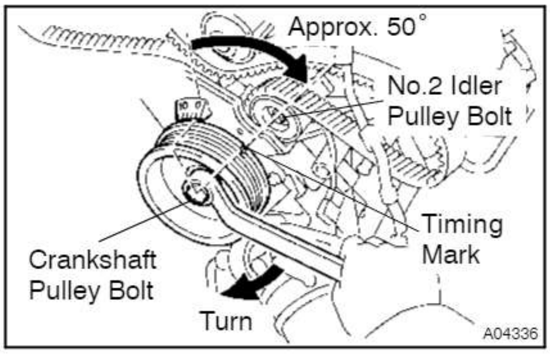

(c) Turn the crankshaft pulley approx. 50° clockwise, and put the timing mark of the crankshaft pulley in line with the centers of the crankshaft pulley bolt and the idler pulley bolt.

NOTICE:

If the timing belt is disengaged, having the crankshaft pulley at the wrong angle can cause the piston head and valve head to come into contact with each other when you remove the camshaft timing pulley (step 19), causing damage. So always set the crankshaft pulley at the correct angle.

(d) Remove the crankshaft pulley bolt.

NOTICE:

Do not turn the crankshaft pulley.

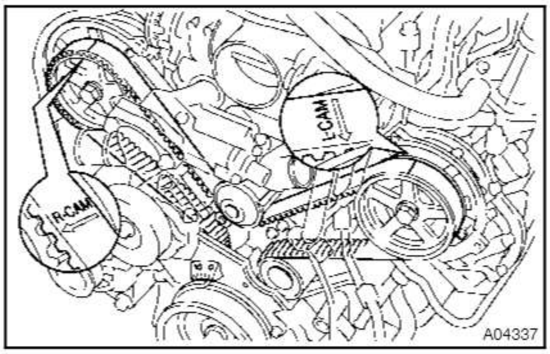

12. REMOVE TIMING BELT TENSIONER

HINT:

- When re–using timing belt:
  If the installation marks have disappeared, before remove the timing belt, place 2 new installation marks on the timing belt to match the timing marks of the camshaft timing pulleys.

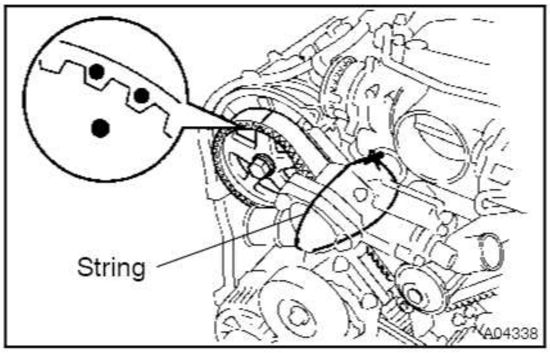

- When replacing timing belt tensioner only:
  To avoid meshing of the timing pulley and timing belt, secure one of them with string. And place matchmarks on the timing belt and RH camshaft timing pulley.

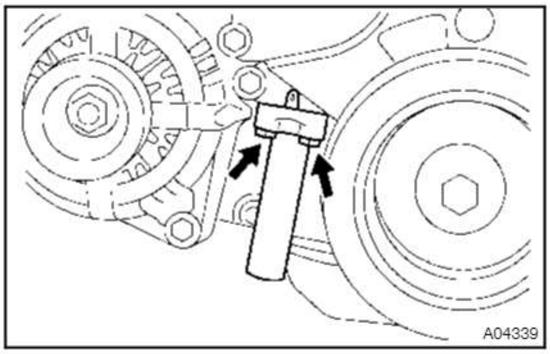

Alternately loosen the 2 bolts, and remove them, the belt tensioner and dust boot.

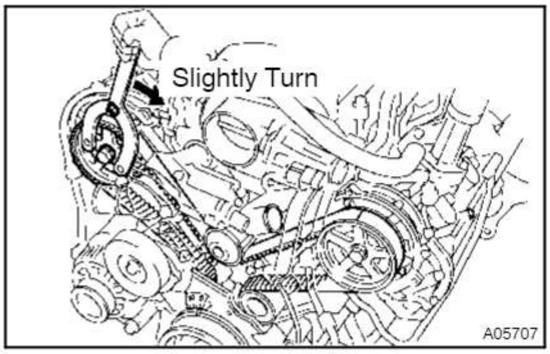

13. **DISCONNECT TIMING BELT FROM CAMSHAFT TIMING PULLEYS**

(a) Using SST, loosen the tension spring between the LH and RH camshaft timing pulleys by slightly turning the LH camshaft timing pulley clockwise.
SST 09960–10010 (09962–01000, 09963–01000)

(b) Disconnect the timing belt from the camshaft timing pulleys.

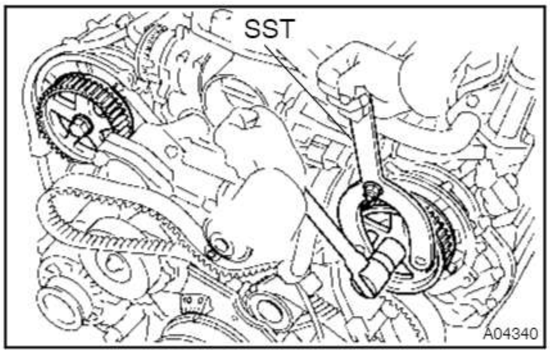

14. **REMOVE CAMSHAFT TIMING PULLEYS**

Using SST, remove the bolt and timing pulley. Remove the 2 timing pulleys.
SST 09960–10010 (09962–01000, 09963–01000)

15. **REMOVE ALTERNATOR**

16. **REMOVE DRIVE BELT TENSIONER**

Remove the bolt, 2 nuts and belt tensioner.

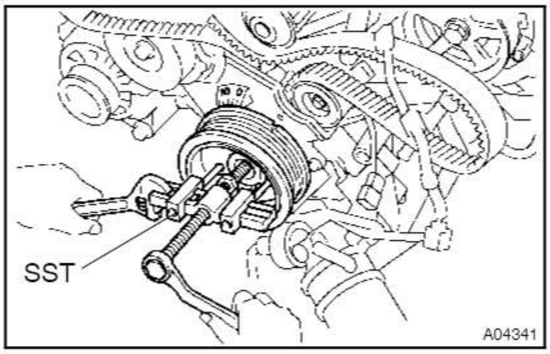

17. **REMOVE CRANKSHAFT PULLEY**

Using SST, remove the crankshaft pulley.
SST 09950–50010 (09951–05010, 09952–05010, 09953–05010, 09953–05020, 09954–05020)

NOTICE:
Do not turn the crankshaft pulley.

18. **REMOVE NO.1 TIMING BELT COVER**

Remove the 4 bolts, timing belt cover.

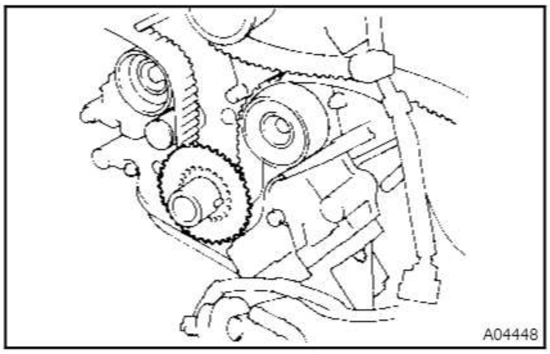

19. **REMOVE TIMING BELT GUIDE**

20. **REMOVE TIMING BELT COVER SPACER**

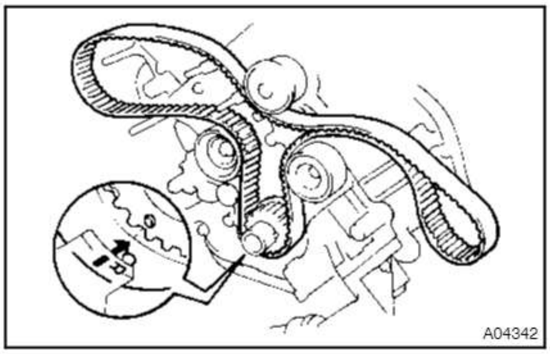

21. REMOVE TIMING BELT

HINT:

If re–using the belt and the installation mark has disappeared from it, place a new installation mark on the timing belt to the match the dot mark of the crankshaft timing pulley.

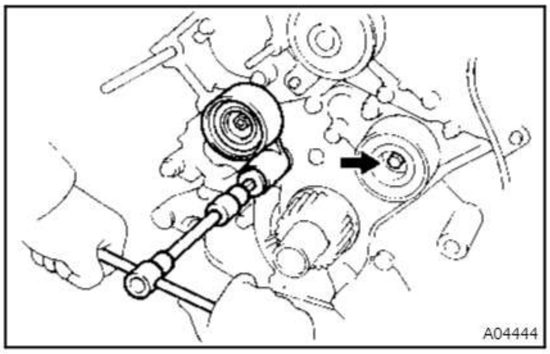

22. REMOVE NO.1 IDLER PULLEY AND NO.2 IDLER PULLEY

(a) Using a 10 mm hexagon wrench, remove the bolt, No.1 idler pulley and plate washer.

(b) Remove the bolt and No.2 idler pulley.

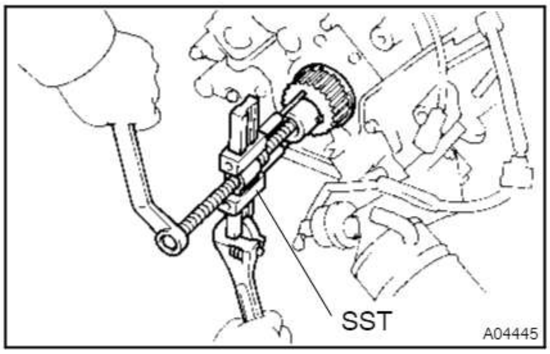

23. REMOVE CRANKSHAFT TIMING PULLEY

Using SST, remove the timing pulley.

SST 09950–50010 (09951–05010, 09952–05010, 09953–05010, 09953–05020, 09954–05010)

NOTICE:

Do not turn the timing pulley.

EM0TM–01

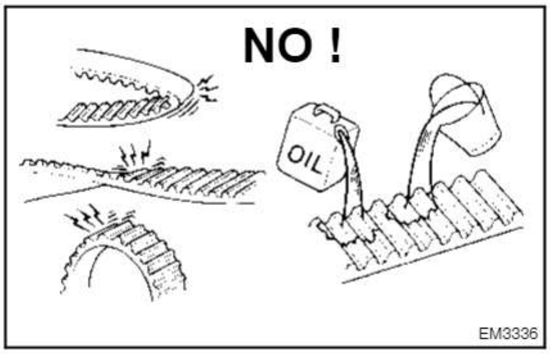

INSPECTION

1. INSPECT TIMING BELT

NOTICE:

- **Do not bend, twist or turn the timing belt inside out.**
- **Do not allow the timing belt to come into contact with oil, water or steam.**
- **Do not utilize timing belt tension when installing or removing the mount bolt of the camshaft timing pulley.**

If there are any defects, as shown in the illustrations, check these points:

(a) Premature parting
  - Check for proper installation.
  - Check the timing cover gasket for damage and proper installation.

(b) If the belt teeth are cracked or damaged, check to see if either camshaft is locked.

(c) If there is noticeable wear or cracks on the belt face, check to see if there are nicks on the side of the idler pulley lock and water pump.

(d) If there is wear or damage on only one side of the belt, check the belt guide and the alignment of each pulley.

(e) If there is noticeable wear on the belt teeth, check timing cover for damage and for foreign material on the pulley teeth.

If necessary, replace the timing belt.

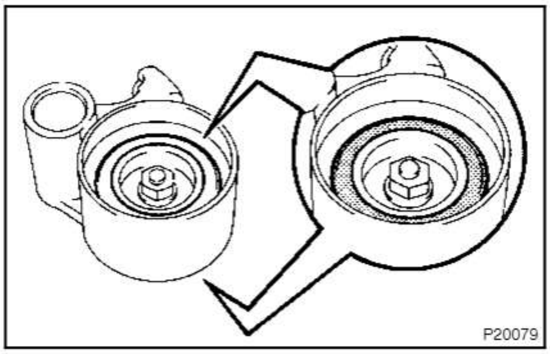

2. INSPECT IDLER PULLEYS

(a) Visually check the seal portion of the idler pulley for oil leakage.

If leakage is found, replace the idler pulley.

(b) Check that the idler pulley turns smoothly.

If necessary, replace the idler pulley.

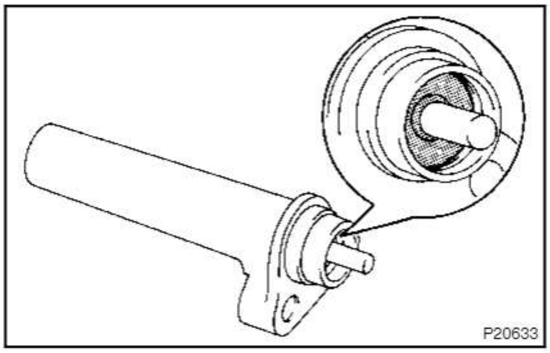

3. INSPECT TIMING BELT TENSIONER

(a) Visually check the seal portion of the tensioner for oil leakage.

HINT:

If there is only the faintest trace of oil on the seal on the push rod side, the tensioner is all right.

If leakage is found, replace the tensioner.

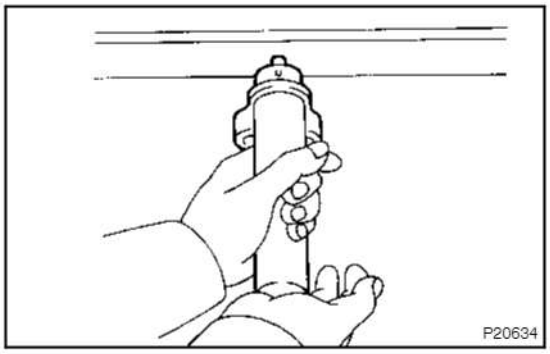

(b) Hold the tensioner with both hands and push the push rod strongly as shown to check that it doesn't move.

If the push rod moves, replace the tensioner.

NOTICE:

Never hold the tensioner push rod facing downward.

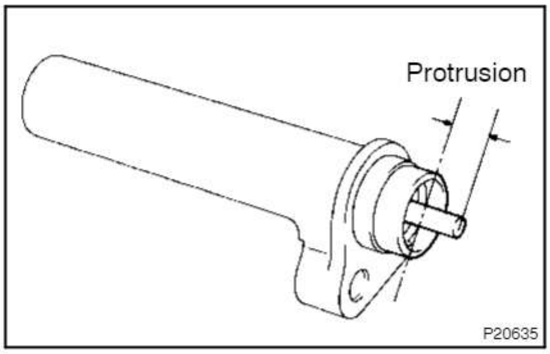

(c) Measure the protrusion of the push rod from the housing end.

Protrusion:

10.5 – 11.5 mm (0.413 – 0.453 in.)

If the protrusion is not as specified, replace the tensioner.

4. INSPECT WATER PUMP

(See page CO–6)

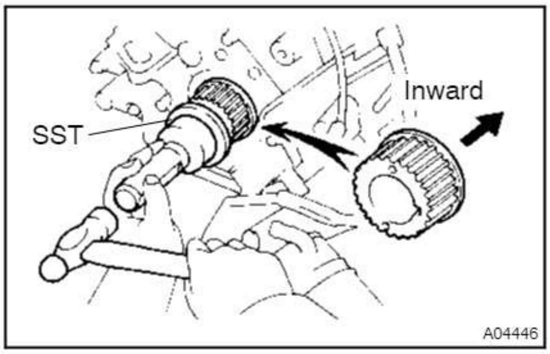

INSTALLATION

1. INSTALL CRANKSHAFT TIMING PULLEY

(a) Align the timing pulley set key with the key groove of the pulley.

(b) Using SST and a hammer, tap in the timing pulley, facing the flange side inward.
SST 09223–46011

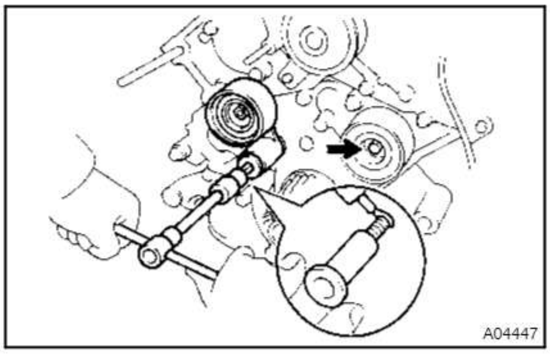

2. INSTALL NO.1 IDLER PULLEY AND NO.2 IDLER PULLEY

(a) Apply adhesive 2 or 3 threads of the pivot bolt.
Adhesive:
Part No. 08833–00080, THREE BOND 1344, LOCTITE 242 or equivalent

(b) Using a 10 mm hexagon wrench, install the plate washer and No.1 idler pulley with the pivot bolt.
Torque: 34.5 N·m (350 kgf·cm, 25 ft·lbf)

(c) Install the No.2 idler pulley with the bolt.
Torque: 34.5 N·m (350 kgf·cm, 25 ft·lbf)

(d) Check that the No.1 and No.2 idler pulley moves smoothly.

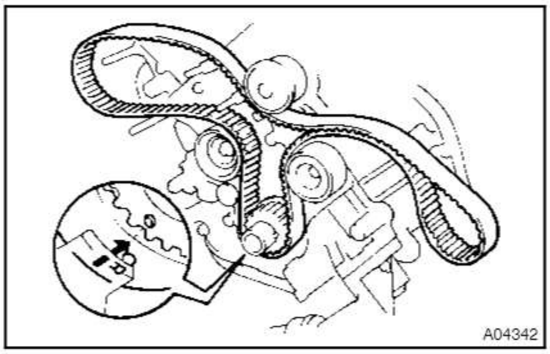

3. TEMPORARILY INSTALL TIMING BELT

NOTICE:
The engine should be cold.

(a) Remove any oil or water on the crankshaft pulley, oil pump pulley, water pump pulley, No.1 idler pulley and No.2 idler pulley, and keep them clean.

NOTICE:
Only wipe the pulleys; do not use any cleansing agent.

(b) Align the installation mark on the timing belt with the timing mark of the crankshaft timing pulley.

(c) Install the timing belt on the crankshaft timing pulley, No.1 idler pulley and No.2 idler pulley.

4. INSTALL TIMING BELT COVER SPACER

(a) Install the gasket to the cover spacer.

(b) Install the cover spacer.

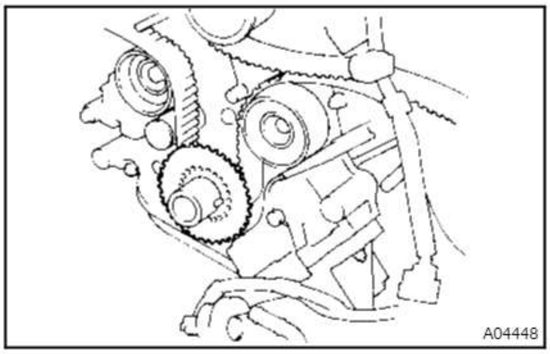

5. INSTALL TIMING BELT GUIDE

Install the belt guide, facing the cup side outward.

6. INSTALL NO.1 TIMING BELT COVER

Install the timing belt cover with the 4 bolts.

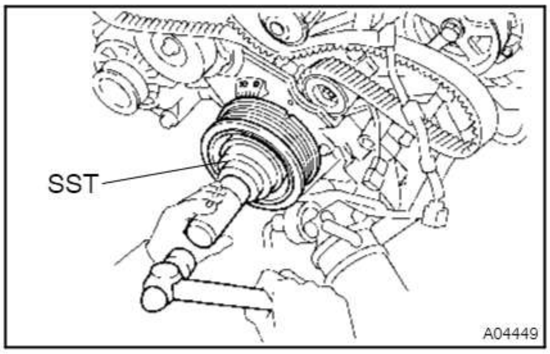

7. INSTALL CRANKSHAFT PULLEY

(a) Align the pulley set key with the key groove of the crankshaft pulley.

(b) Using SST and a hammer, tap in the crankshaft pulley.
SST 09223–46011

8. INSTALL DRIVE BELT TENSIONER

Install the belt tensioner with the bolt and 2 nuts.

Torque: 16 N·m (160 kgf·cm, 12 ft·lbf)

HINT:

Use a bolt 106 mm (4.18 in.) in length.

9. INSTALL ALTERNATOR

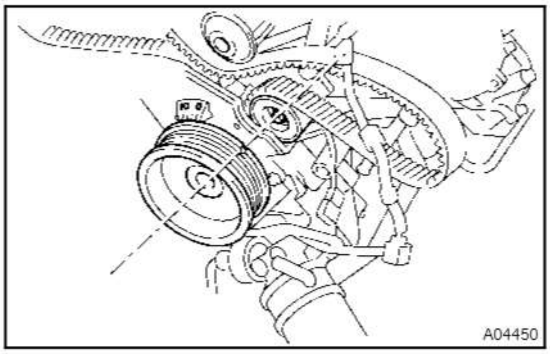

10. CHECK CRANKSHAFT PULLEY POSITION

Check that the timing mark of the crankshaft pulley is aligned with the centers of the crankshaft pulley and the idler pulley bolt.

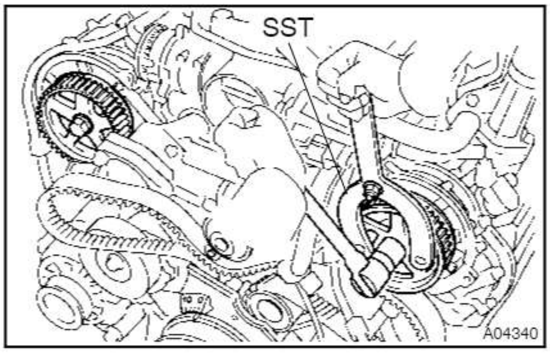

11. INSTALL RH, LH CAMSHAFT TIMING PULLEYS

(a) Align the camshaft knock pin with the knock pin grove of the timing pulley, and slide on the timing pulley.

(b) Using SST, install the pulley bolt.
SST 09960–10010 (09962–01000, 09963–01000)

Torque: 108 N·m (1,100 kgf·cm, 80 ft·lbf)

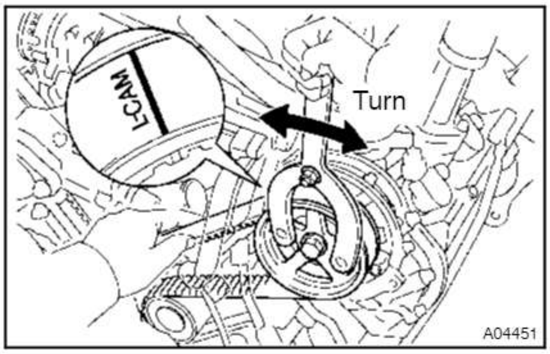

12. CONNECT TIMING BELT TO LH CAMSHAFT TIMING PULLEY

(a) Remove any oil or water on the LH camshaft timing pulley, and keep it clean.

NOTICE:

Only wipe the pulleys; do not use any cleansing agent.

(b) Turn the LH camshaft timing pulley. Align the installation mark on the timing belt with the timing mark of the camshaft timing pulley, and hang the timing belt on the LH camshaft timing pulley.

(c) Turn the LH camshaft timing pulley counterclockwise until there is tension between the crankshaft timing pulley and LH camshaft timing pulley.

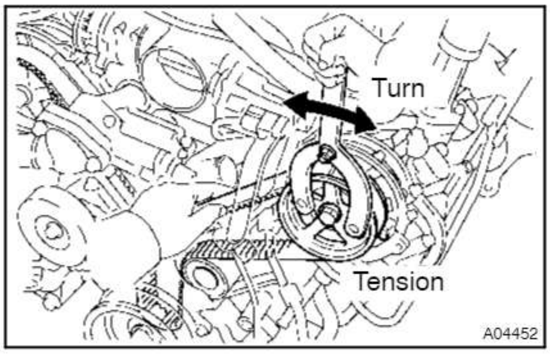

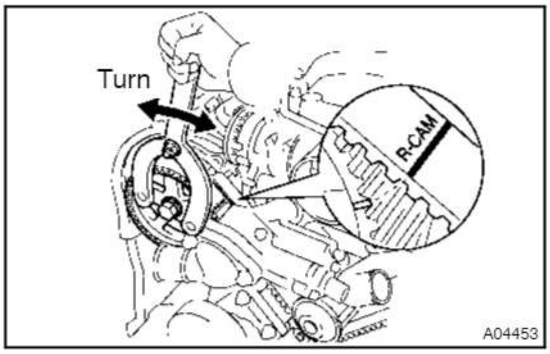

13. CONNECT TIMING BELT TO RH CAMSHAFT TIMING PULLEY

(a) Remove any oil or water on the RH camshaft timing pulley and water pump pulley, and keep them clean.

NOTICE:

Only wipe the pulleys; do not use any cleansing agent.

(b) Turn the RH camshaft timing pulley. Align the installation mark on the timing belt with the timing mark of the camshaft timing pulley, and hang the timing belt on the RH camshaft timing pulley.

14. SET TIMING BELT TENSIONER

(a) Using a press, slowly press in the push rod using 981 – 9,807 N (100 – 1,000 kgf, 220 – 2,205 lbf) of pressure.

(b) Align the holes of the push rod and housing, pass a 1.27 mm hexagon wrench through the holes to keep the setting position of the push rod.

(c) Release the press.

(d) Install the dust boot to the belt tensioner.

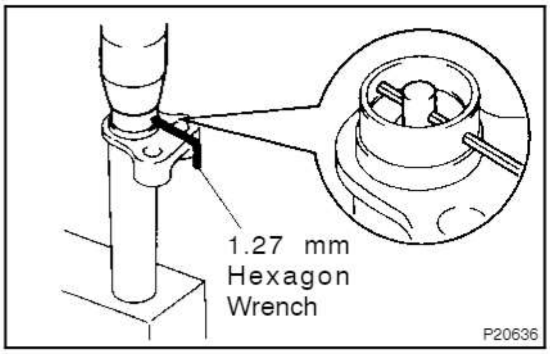

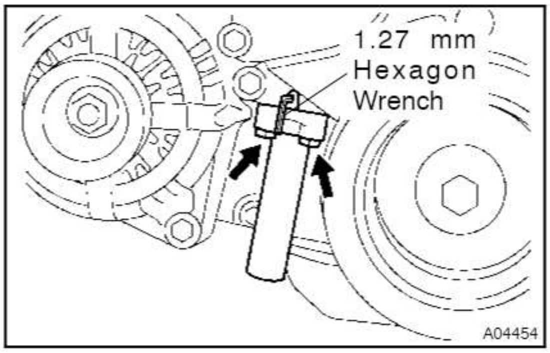

15. INSTALL TIMING BELT TENSIONER

(a) Temporarily install the belt tensioner with the 2 bolts.

(b) Alternately tighten the 2 bolts.

Torque: 26 N·m (270 kgf·cm, 19 ft·lbf)

(c) Using pliers, remove the 1.27 mm hexagon wrench from the belt tensioner.

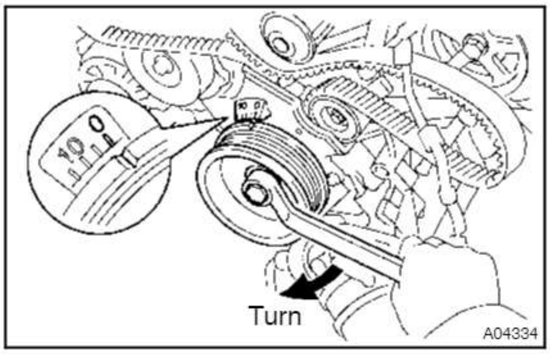

16. CHECK VALVE TIMING

(a) Temporarily install the crankshaft pulley bolt.

(b) Slowly turn the crankshaft pulley 2 revolutions from TDC to TDC.

NOTICE:

Always turn the crankshaft pulley clockwise.

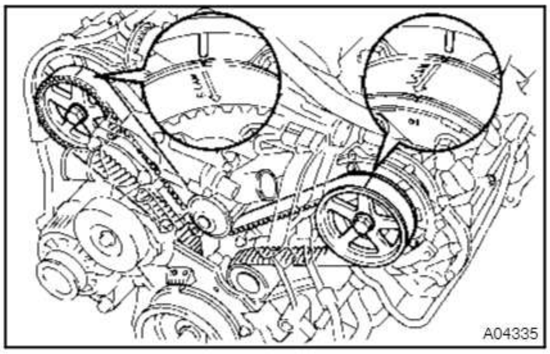

(c) Check that each pulley aligns with the timing marks as shown in the illustration.

If the timing marks do not align, remove the timing belt and reinstall it.

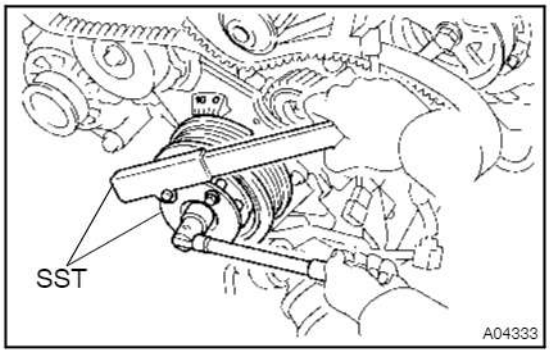

17. TIGHTEN CRANKSHAFT PULLEY BOLT

Using SST, install the pulley bolt.

SST 09213–70010,
09330–00021

Torque: 245 N·m (2,500 kgf·cm, 181 ft·lbf)

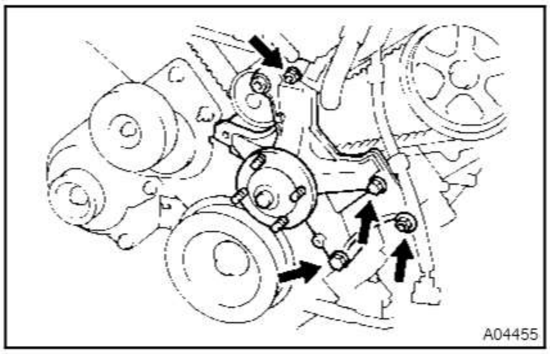

18. INSTALL FAN BRACKET

Install the fan bracket with the 2 bolts and 2 nuts.

Torque:

12 mm head

16 N·m (160 kgf·cm, 12 ft·lbf)

14 mm head

32 N·m (330 kgf·cm, 24 ft·lbf)

HINT:

Each bolt length is indicated in the illustration.

Bolt Length:

106 mm (4.17 in.) for 12 mm head (A)
114 mm (4.49 in.) for 14 mm head (B)

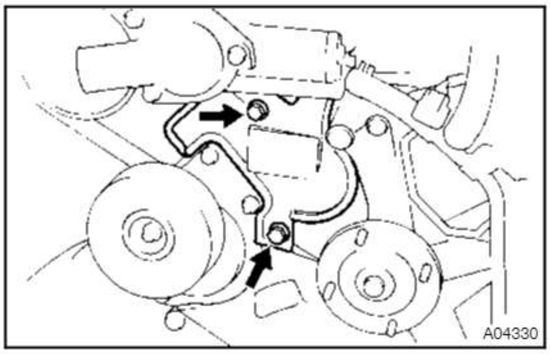

19. INSTALL NO.2 TIMING BELT COVER

Install the No.2 timing belt cover with the 2 bolts.

Torque: 16 N·m (160 kgf·cm, 12 ft·lbf)

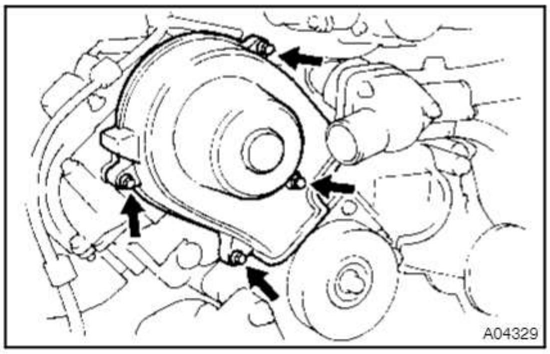

20. INSTALL RH NO.3 TIMING BELT COVER

(a) Fit the RH No.3 timing belt cover, matching it with the fan bracket.

(b) Install the RH No.3 timing belt cover with the 3 bolts and nut.

Torque: 7.5 N·m (80 kgf·cm, 66 in.·lbf)

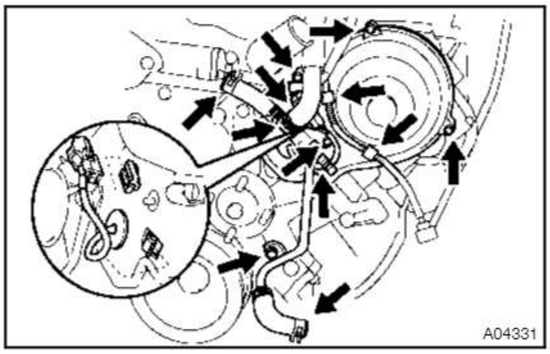

21. INSTALL LH NO.3 TIMING BELT COVER

(a) Install the oil cooler pipe and bolt.

(b) Run the camshaft position sensor wire through the LH No.3 timing belt cover hole.

(c) Fit the LH No.3 timing belt cover, matching it with the fan bracket.

(d) Install the LH No.3 timing belt cover with the 4 bolts and nut.

Torque: 7.5 N·m (80 kgf·cm, 66 in.·lbf)

(e) Install the wire grommet to the LH No.3 timing belt cover.

(f) Install the sensor connector to the connector bracket.

(g) Connect the sensor connector.

(h) Install the sensor wire to the wire clamp on the LH No.3 timing belt cover.

(i) Install the engine wire to the 2 wire clamps on the LH No.3 timing belt cover.

22. INSTALL DRIVE BELT IDLER PULLEY

Install the idler pulley and cover plate with the bolt.

Torque: 37 N·m (380 kgf·cm, 27 ft·lbf)

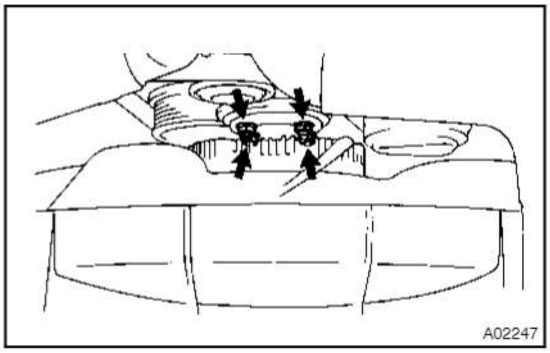

23. INSTALL FAN PULLEY, FAN, FLUID COUPLING AND DRIVE BELT

(a) Temporarily install the fan pulley, the fan, fluid coupling assembly with the 4 nuts.

(b) Install the alternator drive belt.

(c) Tighten the 4 nuts holding the fluid coupling to the fan bracket.

Torque: 21 N·m (215 kgf·cm, 16 ft·lbf)

24. **FILL WITH ENGINE COOLANT**
25. **START ENGINE AND CHECK FOR LEAKS**
26. **RECHECK ENGINE COOLANT LEVEL**
27. **INSTALL BATTERY CLAMP COVER**

CYLINDER HEAD

COMPONENTS

EM0TO–01

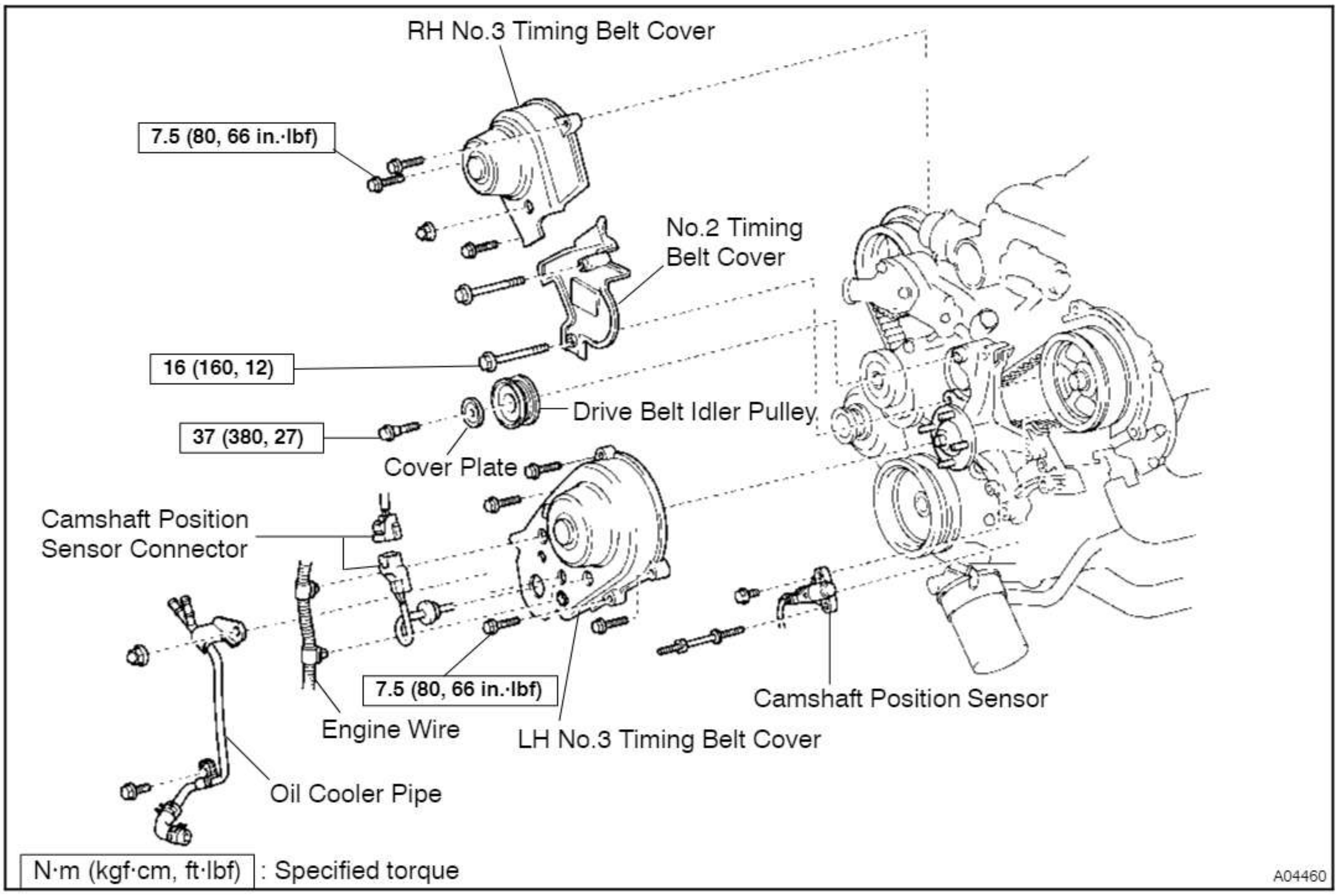

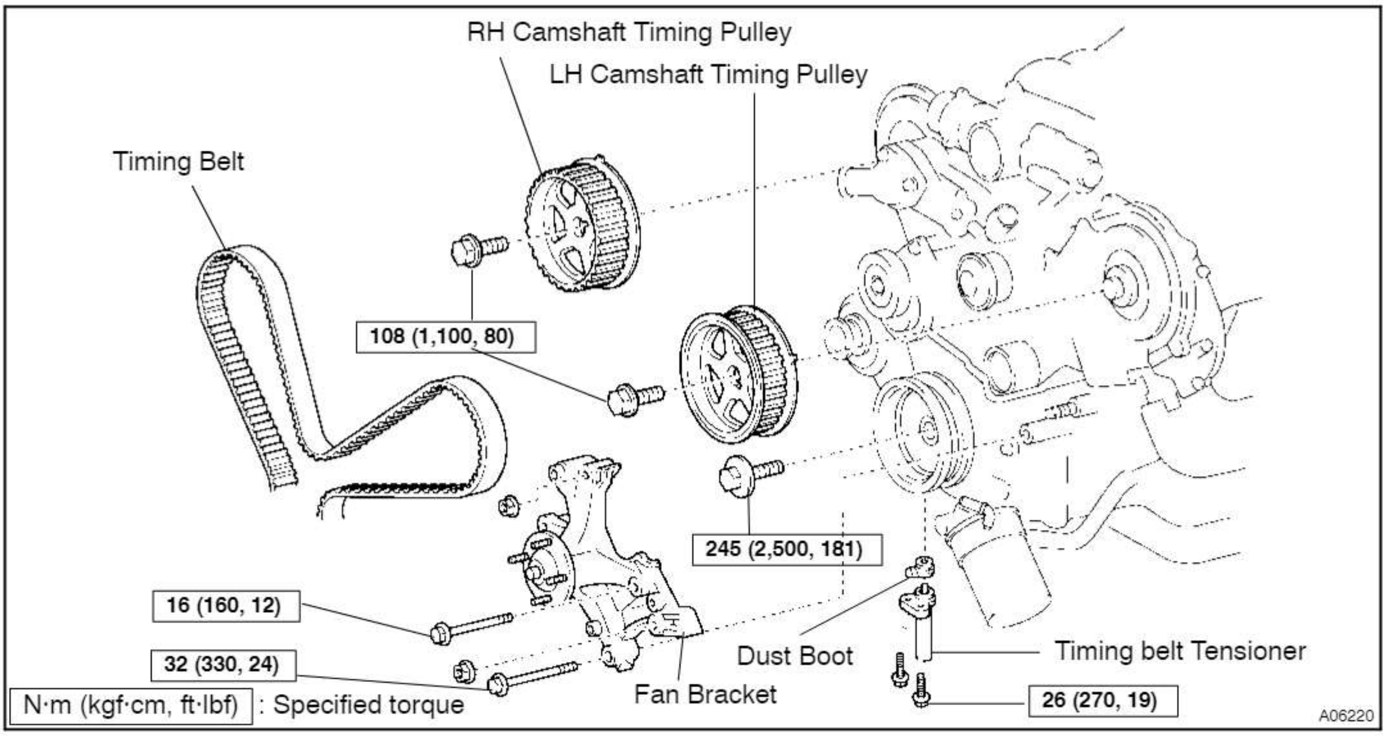

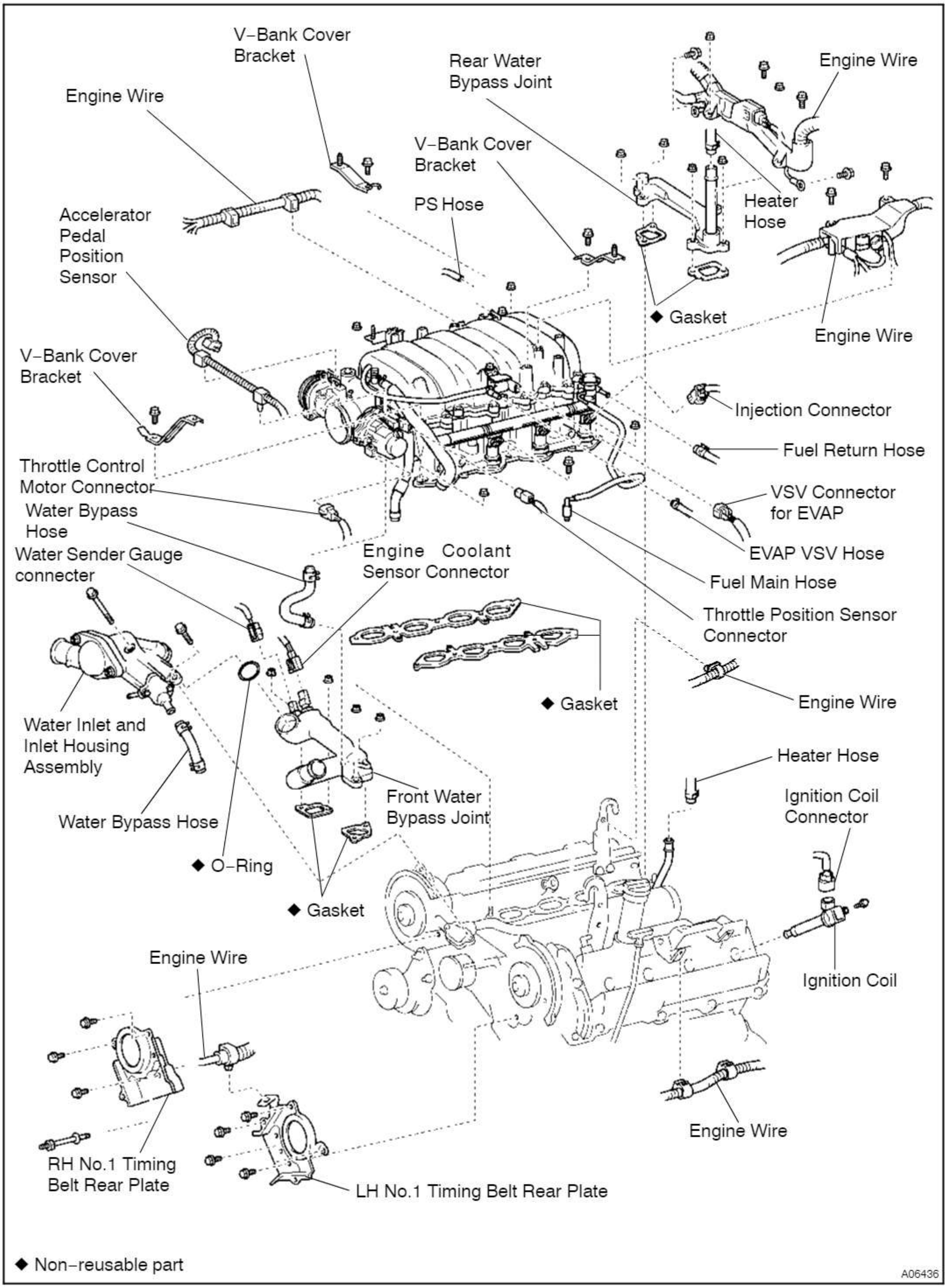

◆ Non–reusable part

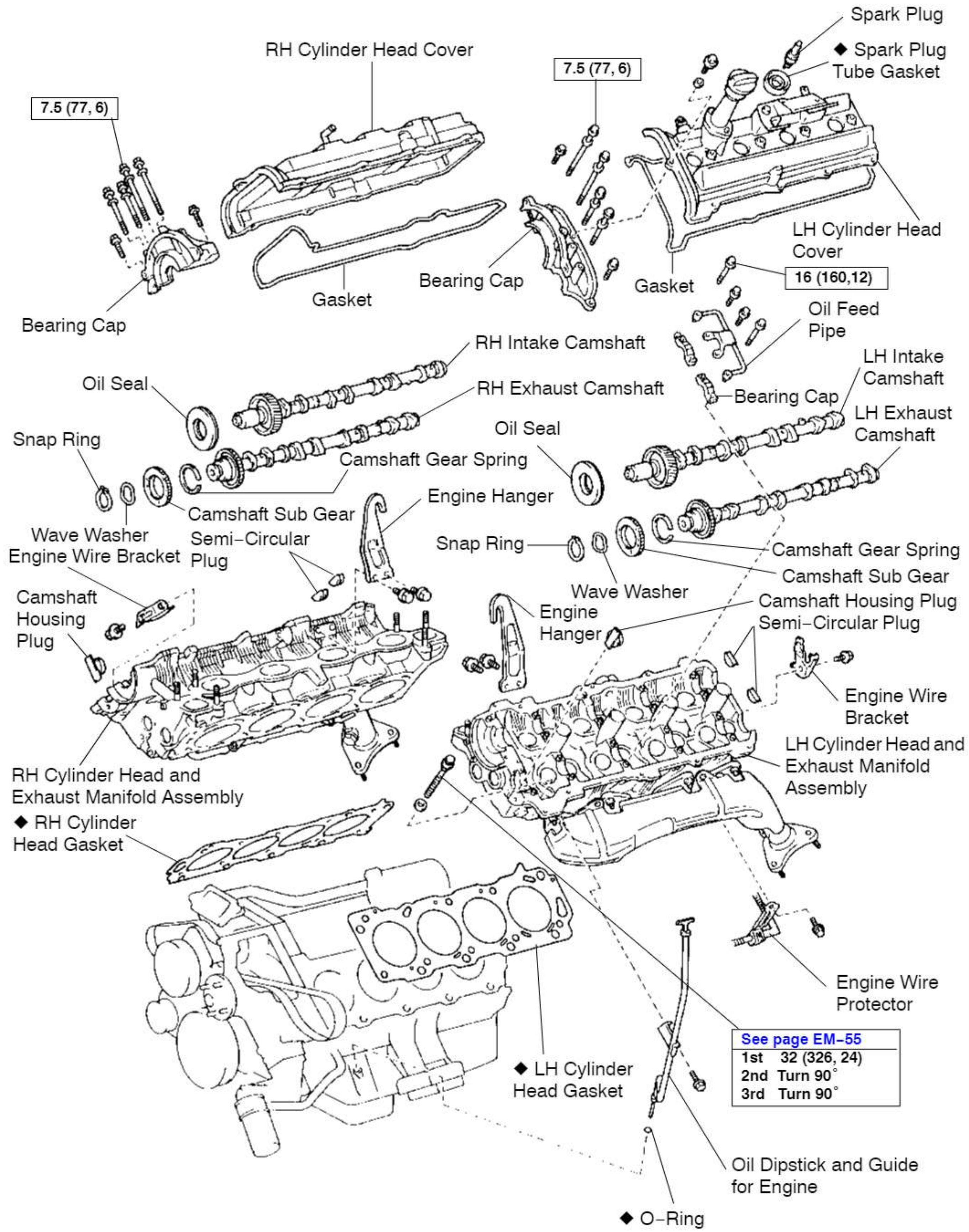

N·m (kgf·cm, ft·lbf) : Specified torque

◆ Non–reusable part

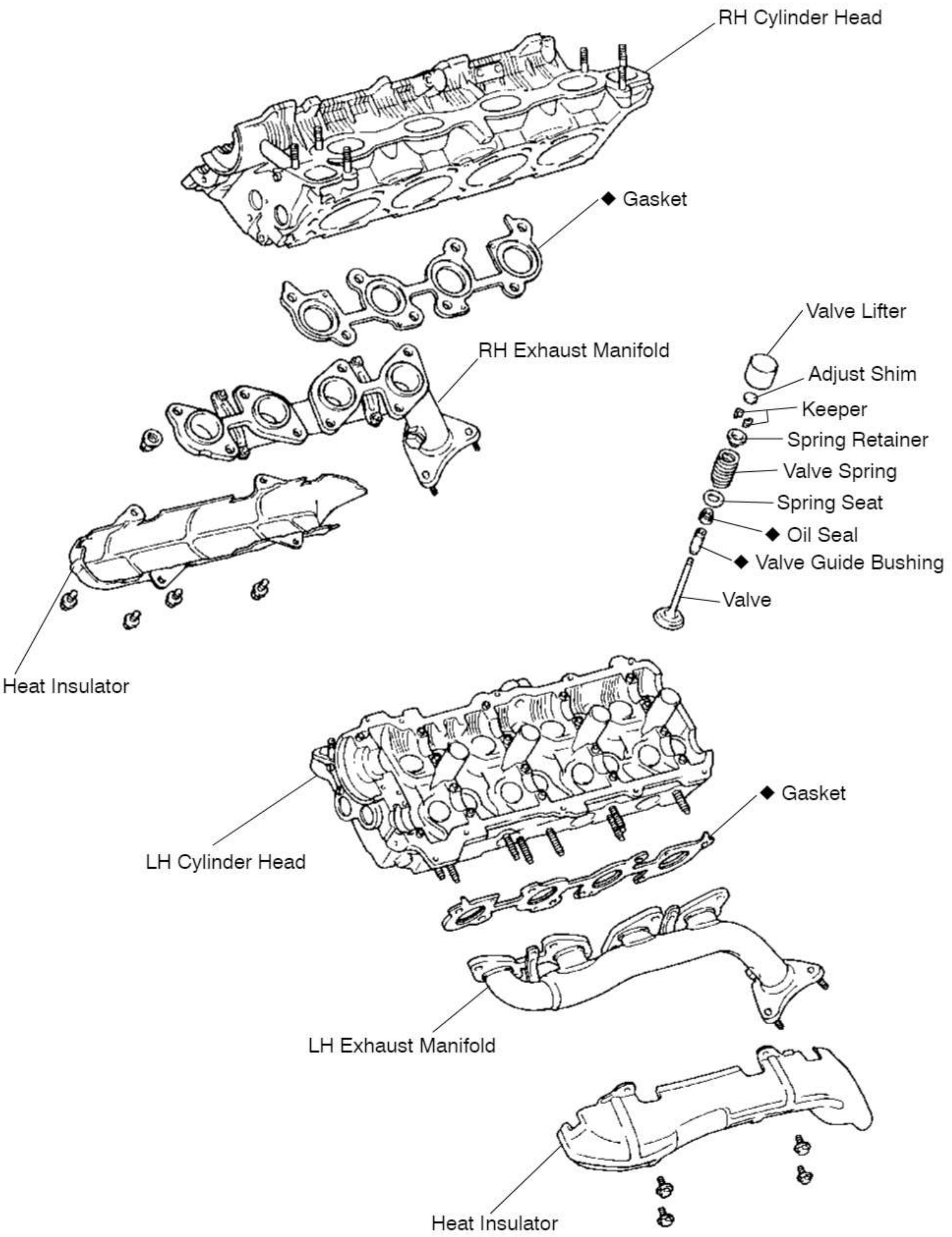

N·m (kgf·cm, ft·lbf) : Specified torque

◆ Non–reusable part

A06107

EM0TP–01

REMOVAL

1. **DISCONNECT TIMING BELT FROM CAMSHAFT TIMING PULLEYS**
   (See page EM–16)
2. **REMOVE CAMSHAFT TIMING PULLEYS**
   (See page EM–16)
3. **REMOVE CAMSHAFT POSITION SENSOR**
   (See page IG–10)
4. **REMOVE OIL DIPSTICK AND GUIDE FOR A/T**
5. **REMOVE IGNITION COILS**
   (See page IG–7)
6. **REMOVE TIMING BELT REAR PLATES**

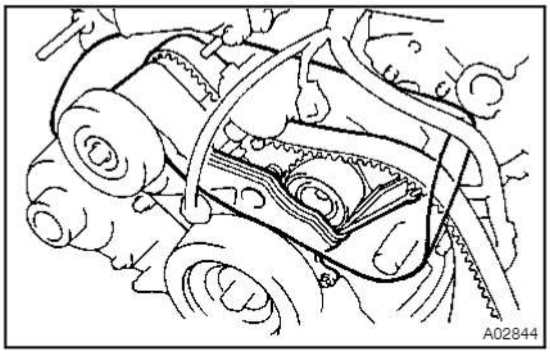

NOTICE:

- **Be careful not to drop anything inside the timing belt cover.**
- **Do not allow the belt to come into correct with oil, water or dust.**

7. **DISCONNECT FUEL INLET HOSE**
8. **REMOVE INTAKE MANIFOLD ASSEMBLY**

(a) Disconnect the accelerator cable.

(b) Disconnect these connectors:

- Throttle position sensor connector
- Accelerator pedal position sensor connector
- Throttle motor connector
- VSV connector for EVAP
- 8 injector connectors
- Water temperature senor
- Water sender gauge
- 8 ignition coil connector

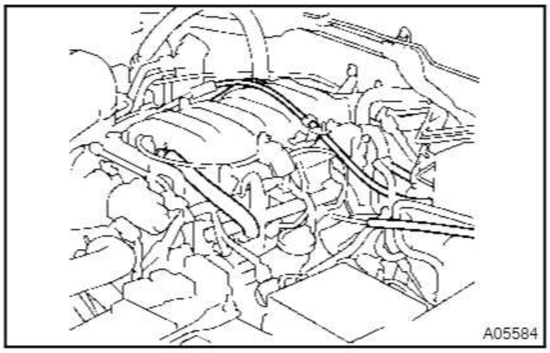

(c) Disconnect these hoses:

- Fuel pressure regulator vacuum hose from fuel pressure regulator pipe.
- PCV hose from PCV valve on LH cylinder head
- PS air hose from intake manifold

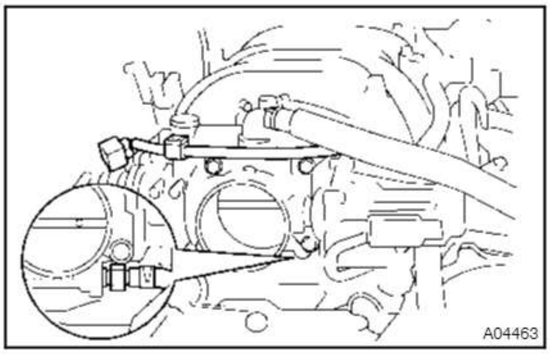

(d) Disconnect the 2 wire clamp from the throttle body.

(e) No.1 water bypass hose (from the front water by–pass joint).

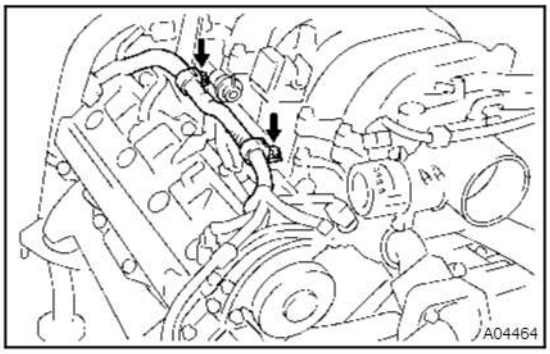

(f) Disconnect the 2 wire clamps from the wire clamp bracket on the RH delivery pipe.

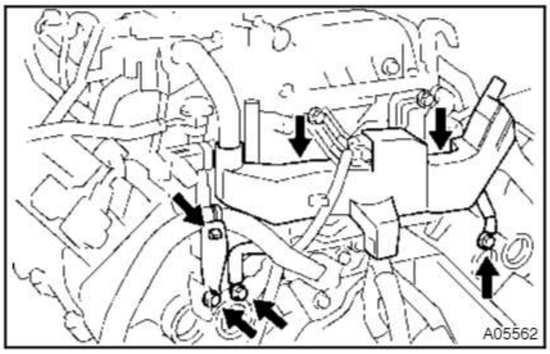

(g) Remove the 2 bolts and disconnect the engine wire protector from the rear water bypass joint and RH cylinder head.

(h) Remove the guide for A/T bracket from the LH cylinder head.

(i) Remove the 2 ground cables from the RH and LH cylinder head.

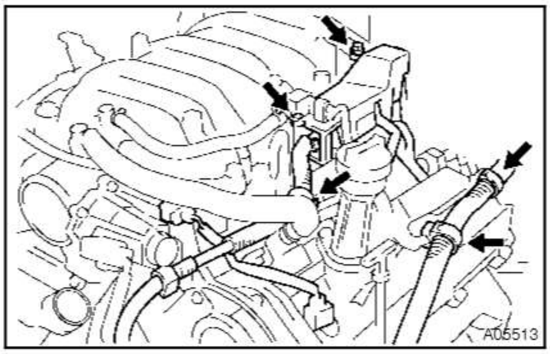

(j) Remove the 2 bolts and disconnect the engine wire protector from the intake manifold.

(k) Remove the engine wire from the engine hanger.

(l) Remove the engine wire from the wire bracket.

(m) Remove the RH rear and LH front V–bank cover brackets.

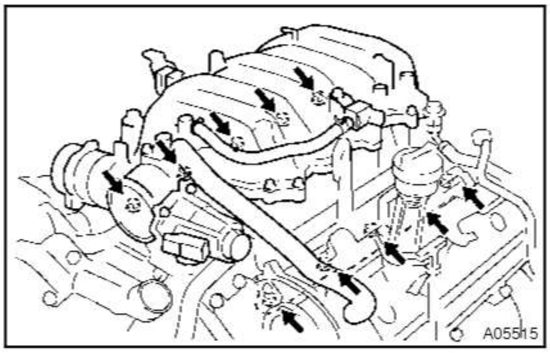

(n) Remove the 6 bolts, 4 nuts, the intake manifold assembly and 2 gaskets.

9. REMOVE WATER INLET AND INLET HOUSING ASSEMBLY

(See page CO–5)

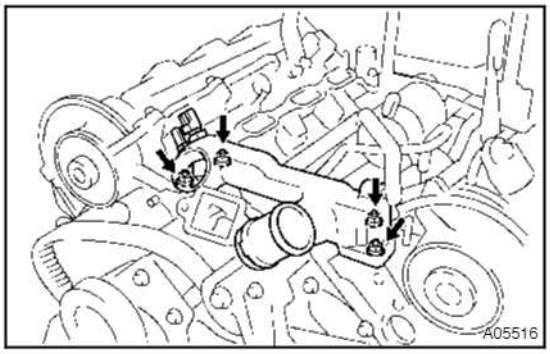

10. REMOVE FRONT WATER BYPASS JOINT

Remove the 4 nuts, water bypass joint and 2 gaskets.

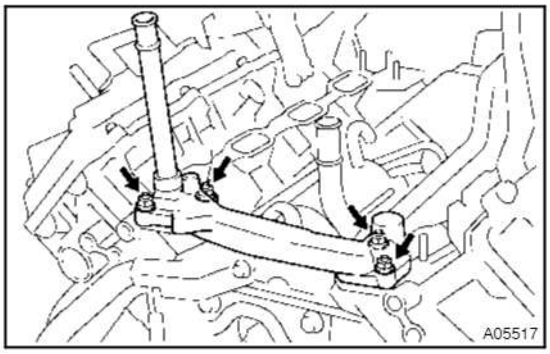

11. REMOVE REAR WATER BYPASS JOINT

Remove the 4 nuts, water bypass joint and 2 gaskets.

12. REMOVE 2 ENGINE HANGERS

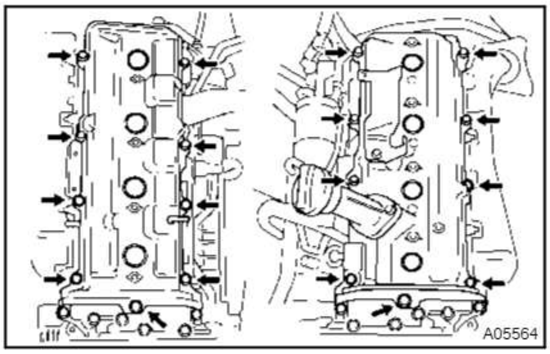

13. REMOVE CYLINDER HEAD COVERS

Remove the 18 bolts, 18 seal washers, cylinder head cover and gasket. Remove the 2 cylinder head covers.

14. IF NECESSARY, REMOVE SEMI–CIRCULAR PLUGS AND CAMSHAFT HOUSING PLUGS

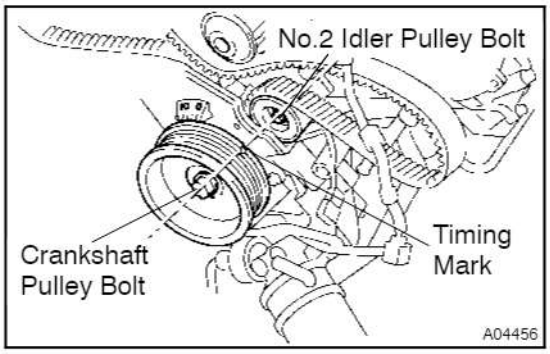

15. REMOVE CAMSHAFTS

NOTICE:

Since the thrust clearance of the camshaft is small, the camshaft must be kept level while it is being removed. If the camshaft is not kept level, the portion of the cylinder head receiving the shaft thrust may crack or be damaged, causing the camshaft to seize or break. To avoid this, the following steps should be carried out.

(a) Check the crankshaft pulley position.
Check that the timing mark of the crankshaft pulley is in aligned with the centers of the crankshaft pulley bolt and idler pulley bolt.

NOTICE:

Having the crankshaft pulley at the wrong angle can cause the piston head and valve head to come into contact with each other when you remove the camshaft, causing damage. So always set the crankshaft pulley at the correct angle.

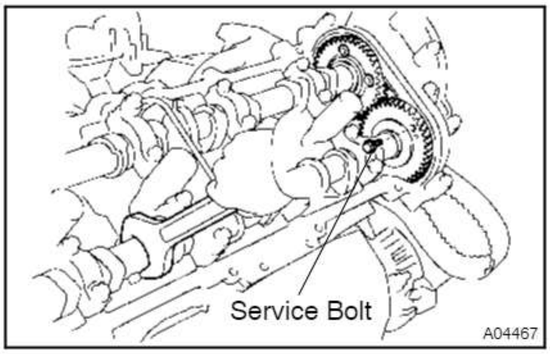

(b) Remove the RH camshafts.

(1) Boring the service bolt hole of the sub–gear upward by turning the hexagon wrench head portion of the exhaust camshaft with a wrench.

(2) Secure the sub–gear to the main gear with a service bolt.

Recommended service bolt:

Thread diameter	6 mm
Thread pitch	1.0 mm
Bolt length	16 – 20 mm

HINT:

When removing the camshafts, make sure that the torsional spring force of the sub–gear has been eliminated by the above operation.

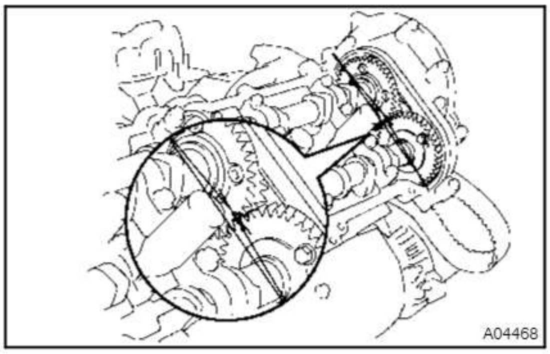

(3) Set the timing mark (1 dot mark) of the camshaft main gear at approx. 10° angle by turning the hexagon wrench head portion of the exhaust camshaft with a wrench.

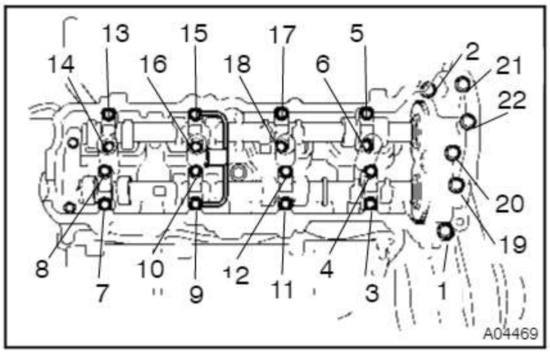

(4) Uniformly loosen and remove the 22 bearing cap bolts in several passes, in the sequence shown.

(5) Remove the oil feed pipe, 9 bearing caps and camshafts.

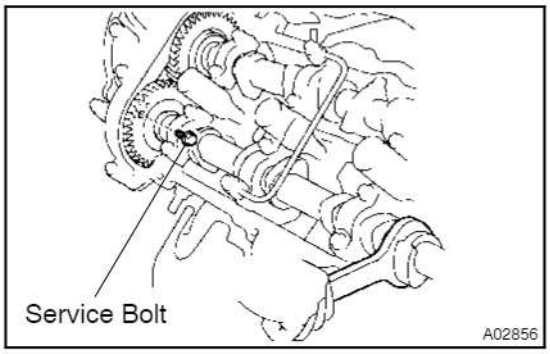

(c) Remove the LH camshafts.

(1) Boring the service bolt hole of the sub–gear upward by turning the hexagon wrench head portion of the exhaust camshaft with a wrench.

(2) Secure the sub–gear to the main gear with a service bolt.

Recommended service bolt:

Thread diameter	6 mm
Thread pitch	1.0 mm
Bolt length	16 – 20 mm

HINT:

When removing the camshaft, make sure that the torsional spring force of the sub–gear has been eliminated by the above operation.

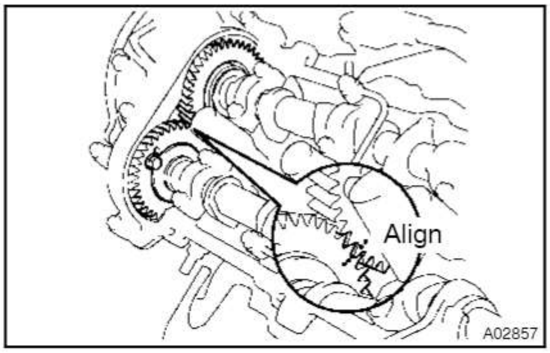

(3) Align the timing mark (2 dot marks) of the camshaft drive gear by turning the hexagon wrench head portion of the exhaust camshaft with a wrench.

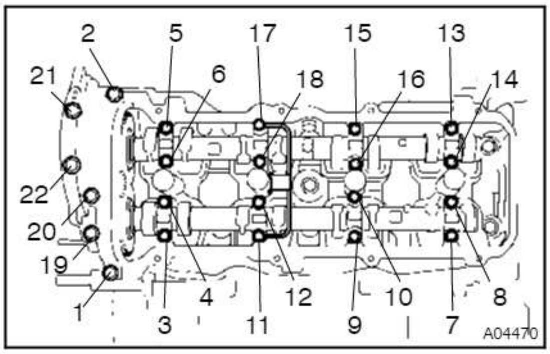

(4) Uniformly loosen and remove the 22 bearing cap bolts in several passes, in the sequence shown.

(5) Remove the oil feed pipe, 9 bearing caps, cam shaft timing oil control valve filter and camshafts.

HINT:

Arrange the bearing caps in correct order.

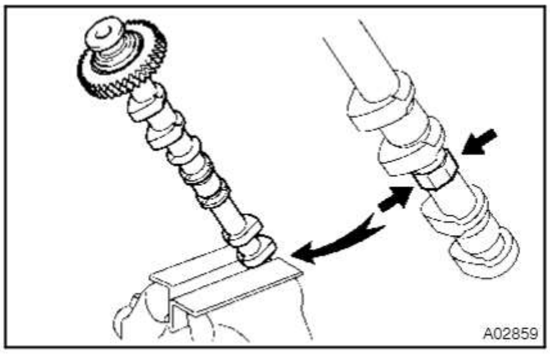

16. DISASSEMBLE EXHAUST CAMSHAFTS

(a) Mount the hexagon wrench head portion of the camshaft in a vise.

NOTICE:

Be careful not to damage the camshaft.

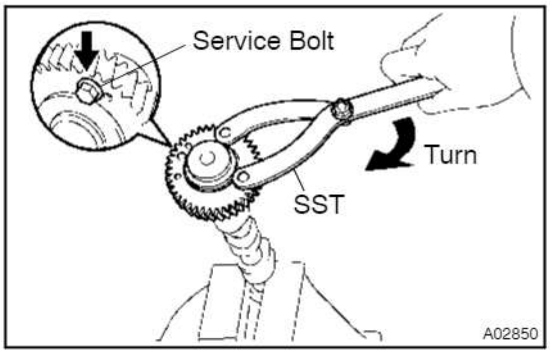

(b) Using SST, turn the sub–gear clockwise, and remove the service bolt.

SST 09960–10010 (09962–01000, 09963–00500)

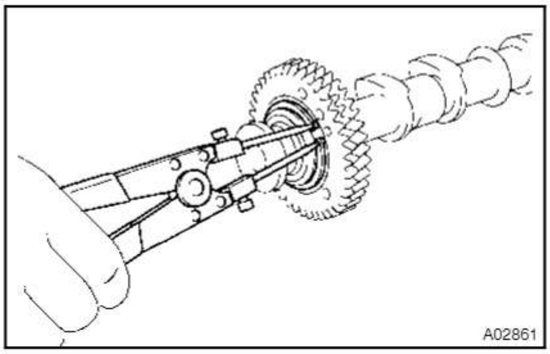

(c) Using snap ring pliers, remove the snap ring.

(d) Remove these parts:

- Wave washer
- Camshaft sub–gear
- Camshaft gear spring

HINT:

Arrange the camshaft sub–gears and gear spring (RH and LH sides).

Be careful not to damage the camshaft timing tube.

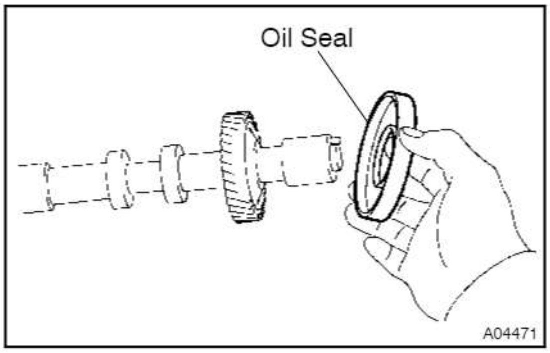

17. REMOVE OIL SEAL FROM INTAKE CAMSHAFT

18. REMOVE SPARK PLUGS

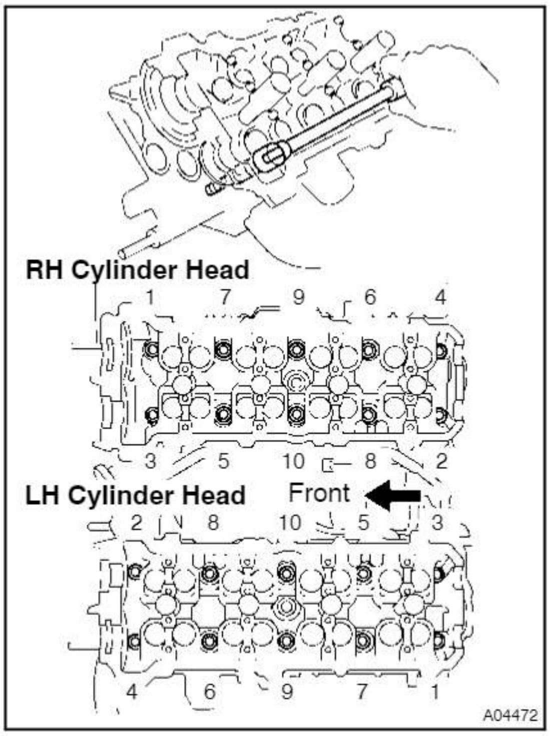

19. REMOVE CYLINDER HEAD AND EXHAUST MANIFOLD ASSEMBLIES

(a) Uniformly loosen the 10 cylinder head bolts on one side of each cylinder head in several passes, in the sequence shown, then do the other side as shown. Remove the 20 cylinder head bolts and plate washers.

NOTICE:

- **Cylinder head warpage or cracking could result from removing bolts in incorrect order.**

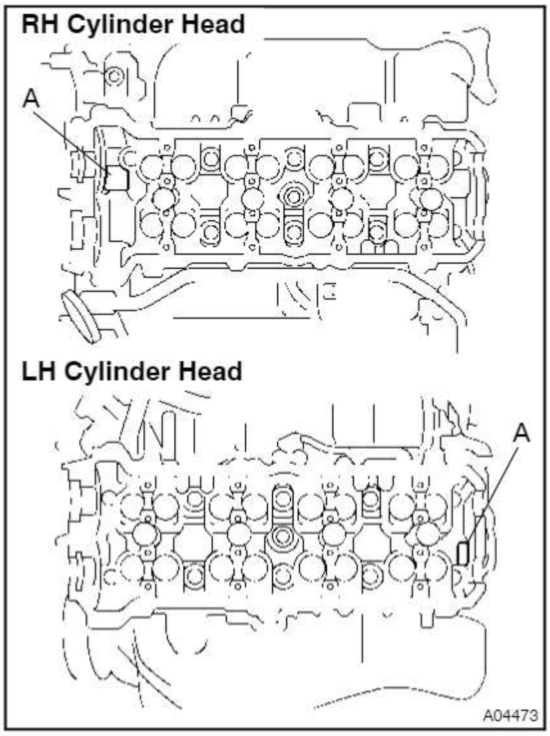

- **Do not drop the plate washer for cylinder head bolt into portion A of the cylinder head. If dropped into portion A, the plate washer will pass through the cylinder head and cylinder block into the oil pan.**

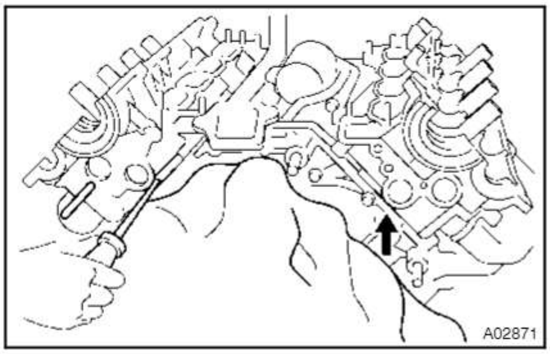

(b) Lift the cylinder head from the dowels on the cylinder block, and place the 2 cylinder heads on wooden blocks on a bench.

HINT:

If the cylinder head is lift off, pry between the cylinder head and cylinder block with a screwdriver.

NOTICE:

- **Be careful not to damage the contact surfaces of the cylinder head and cylinder block.**
- **The cylinder head should not be tilted so as to secure the valve lifter. If the cylinder head is tilted, remove the valve lifter and check that the adjusting shim is set correctly.**

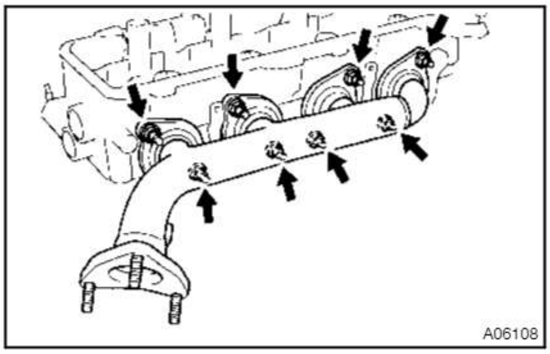

20. REMOVE RH EXHAUST MANIFOLD FROM CYLINDER HEAD

(a) Remove the 4 bolts and heat insulator.

(b) Remove the 8 nuts, exhaust manifold and gasket.

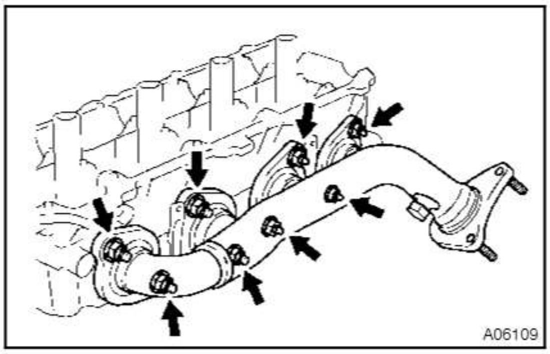

21. REMOVE LH EXHAUST MANIFOLD FROM CYLINDER HEAD

(a) Remove the 4 bolts and heat insulator.

(b) Remove the 8 nuts, exhaust manifold and gasket.

DISASSEMBLY

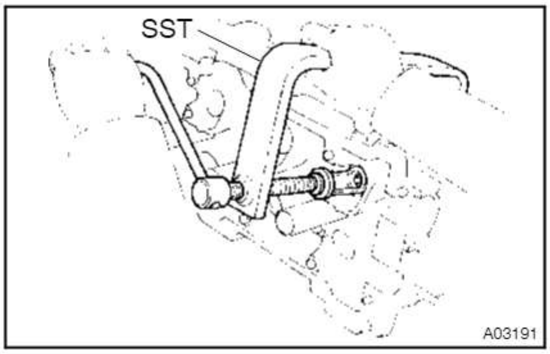

1. REMOVE VALVE LIFTERS AND SHIMS

HINT:

Arrange the valve lifters and shims in correct order.

2. REMOVE VALVES

(a) Using SST, compress the valve spring and remove the 2 keepers.
SST 09202–70020 (09202–00010)

(b) Remove these parts:

- Spring retainer
- Valve spring
- Valve
- Spring seat

HINT:

Arrange the valves, valve springs, spring seats and spring retainers incorrect order.

(c) Using needle–nose pliers, remove the oil seal.

EM0TR–01

INSPECTION

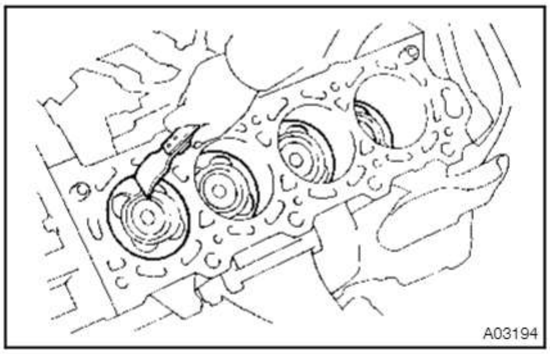

1. CLEAN TOP SURFACES OF PISTONS AND CYLINDER BLOCK

(a) Turn the crankshaft, and bring each piston to top dead center (TDC). Using a gasket scraper, remove all the carbon from the piston top surface.

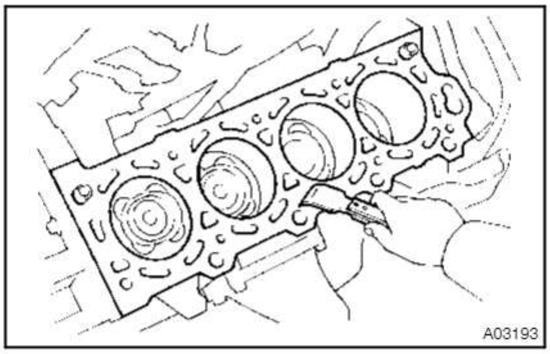

(b) Using a gasket scraper, remove all the gasket material from the cylinder block surface.

(c) Using compressed air, blow carbon and oil from the bolt holes.

CAUTION:

Protect your eyes when using high pressure compressed air.

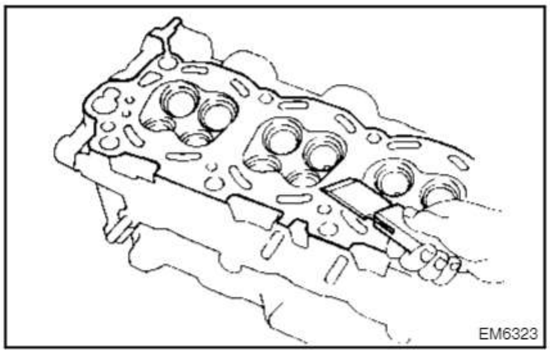

2. REMOVE GASKET MATERIAL

Using a gasket scraper, remove all the gasket material from the cylinder block contact surface.

NOTICE:

Be careful not to scratch the cylinder block contact surface.

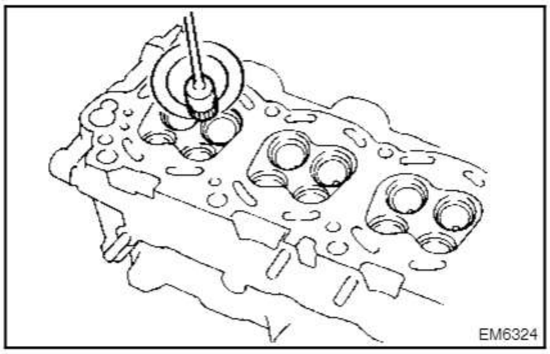

3. CLEAN COMBUSTION CHAMBERS

Using a wire brush, remove all the carbon from the combustion chambers.

NOTICE:

Be careful not to scratch the cylinder block contact surface.

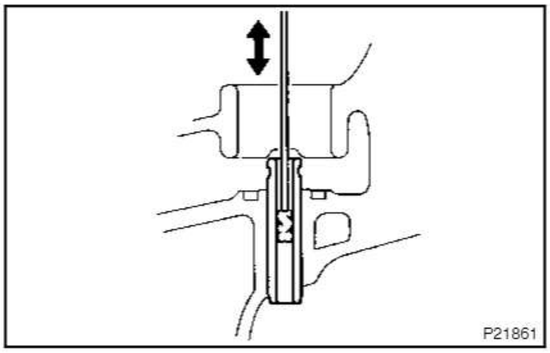

4. CLEAN VALVE GUIDE BUSHINGS

Using a valve guide bushing brush and solvent, clean all the guide bushings.

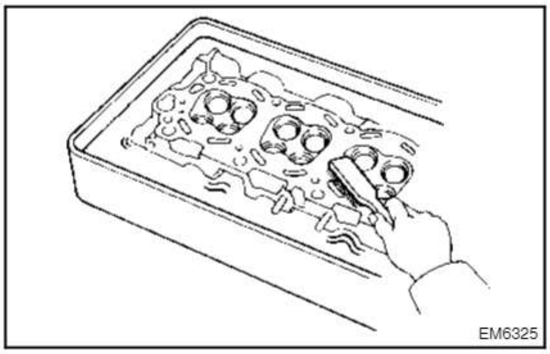

5. CLEAN CYLINDER HEAD

Using a soft brush and solvent, thoroughly clean the cylinder head.

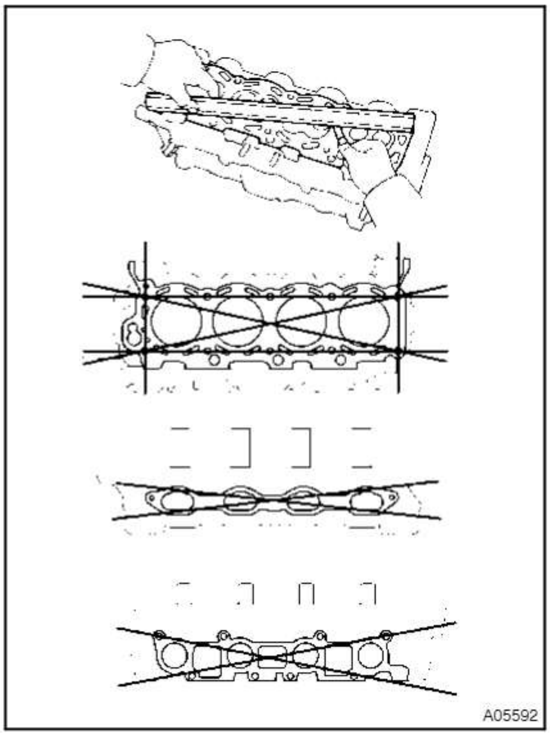

6. INSPECT FOR FLATNESS

Using a precision straight edge and feeler gauge, measure the surfaces contacting the cylinder block and the manifolds for warpage.

Maximum warpage:
0.10 mm (0.0039 in.)

If warpage is greater than maximum, replace the cylinder head.

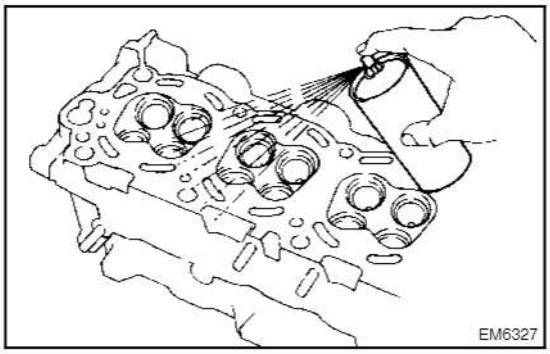

7. INSPECT FOR CRACKS

Using a dye penetrant, check the combustion chamber, intake ports, exhaust ports and cylinder block surface for cracks.

If cracked, replace the cylinder head.

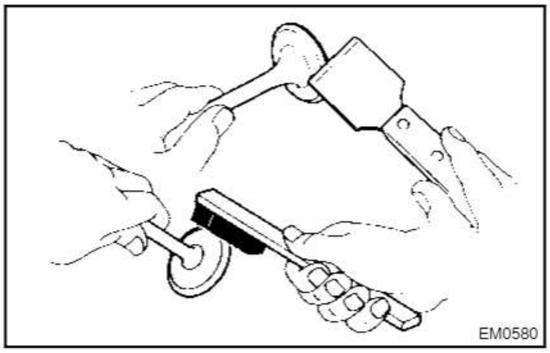

8. CLEAN VALVES

(a) Using a gasket scraper, chip off any carbon from the valve head.
(b) Using a wire brush, thoroughly clean the valve.

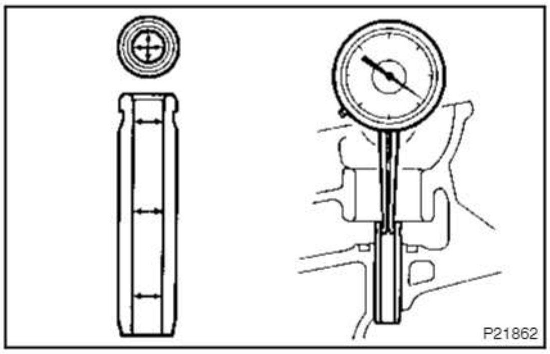

9. INSPECT VALVE STEMS AND GUIDE BUSHINGS

(a) Using a caliper gauge, measure the inside diameter of the guide bushing.

Bushing inside diameter:
5.510 – 5.530 mm (0.2169 – 0.2177 in.)

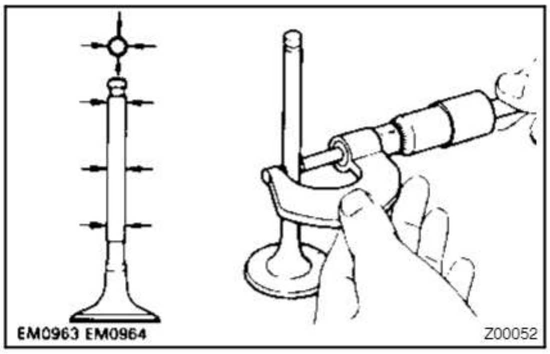

(b) Using a micrometer, measure the diameter of the valve stem.

Valve stem diameter:
Intake
5.470 – 5.485 mm (0.2154 – 0.2159 in.)
Exhaust
5.465 – 5.480 mm (0.2152 – 0.2157 in.)

(c) Subtract the valve stem diameter measurement from the guide bushing inside diameter measurement.

Standard oil clearance:
Intake
0.025 – 0.060 mm (0.0010 – 0.0024 in.)
Exhaust
0.030 – 0.065 mm (0.0012 – 0.0026 in.)
Maximum oil clearance:
Intake
0.08 mm (0.0031 in.)
Exhaust
0.10 mm (0.0039 in.)

If the clearance is greater than maximum, replace the valve and guide bushing. (See Page EM–51)

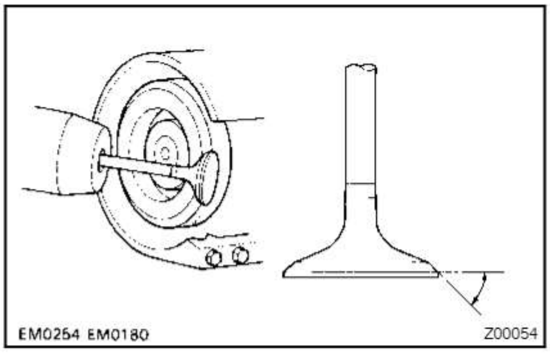

10. INSPECT AND GRIND VALVES

(a) Grind the valve enough to remove pits and carbon.

(b) Check that the valve is ground to the correct valve face angle.

Valve face angle:
44.5°

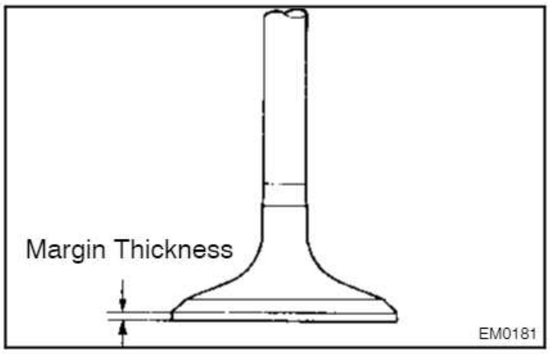

(c) Check the valve head margin thickness.

Standard margin thickness:
IN 1.25 mm (0.049 in.)
EX 1.4 mm (0.055 in.)
Minimum margin thickness:
0.5 mm (0.020 in.)

If the margin thickness is less than minimum, replace the valve.

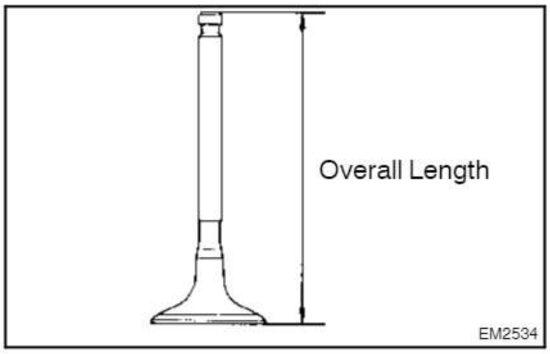

(d) Check the valve overall length.

Standard overall length:
Intake: 95.05 mm (3.7421 in.)
Exhaust: 95.10 mm (3.7441 in.)
Minimum overall length:
Intake: 94.55 mm (3.7224 in.)
Exhaust: 94.60 mm (3.7244 in.)

If the overall length is less than minimum, replace the valve.

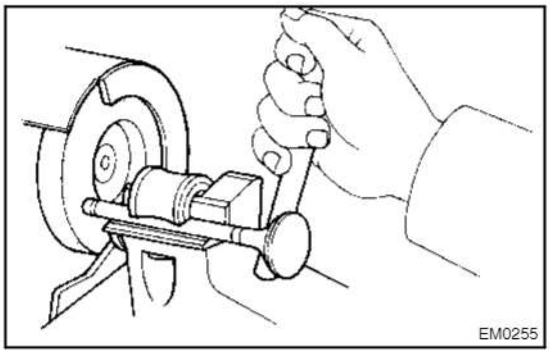

(e) Check the surface of the valve stem tip for wear.

If the valve stem tip is worn, resurface the tip with a grinder or replace the valve.

NOTICE:
Do not grind off more than minimum.

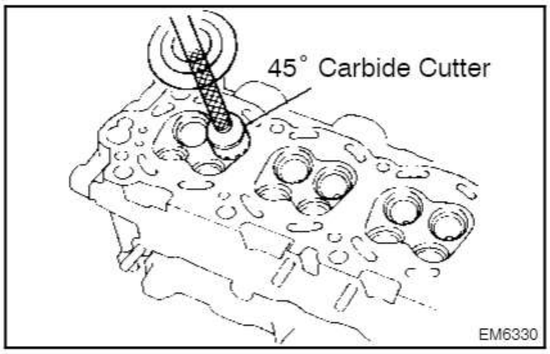

11. INSPECT AND CLEAN VALVE SEATS

(a) Using a 45° carbide cutter, resurface the valve seats. Remove only enough metal to clean the seats.

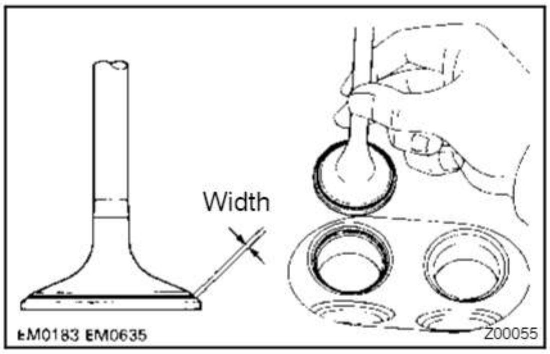

(b) Check the valve seating position.
Apply a light coat of prussian blue (or white lead) to the valve face. Lightly press the valve against the seat. Do not rotate valve.

(c) Check the valve face and seat for the following:
- If blue appears 360° around the face, the valve is concentric. If not, replace the valve.
- If blue appears 360° around the valve seat, the guide and face are concentric. If not, resurface the seat.
- Check that the seat contact is in the middle of the valve face with the following width:

1.0 – 1.4 mm (0.039 – 0.055 in.)

If not, correct the valve seats as follows:
- If the seating is too high on the valve face, use 30° and 45° cutters to correct the seat.

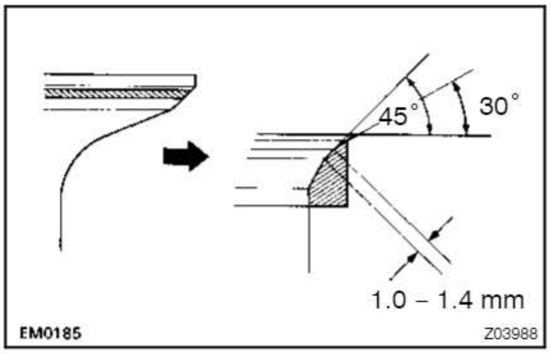

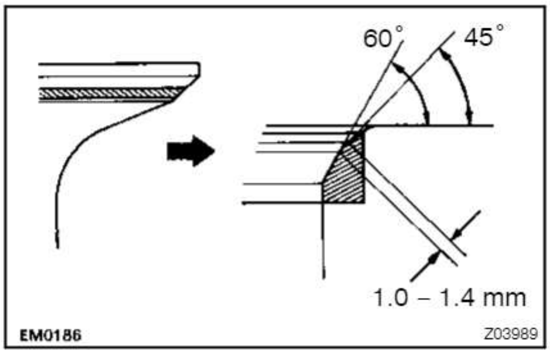

- If the seating is too low on the valve face, use 60° and 45° cutters to correct the seat.

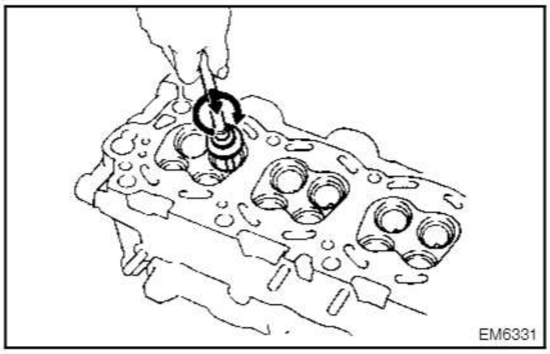

(d) Hand–lap the valve and valve seat with an abrasive compound.

(e) After hand–lapping, clean the valve and valve seat.

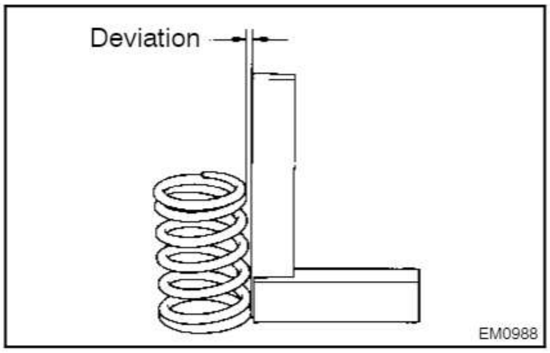

12. INSPECT VALVE SPRINGS

(a) Using a steel square, measure the deviation of the valve spring.

Maximum deviation:

2.0 mm (0.079 in.)

If the deviation is greater than maximum, replace the valve spring.

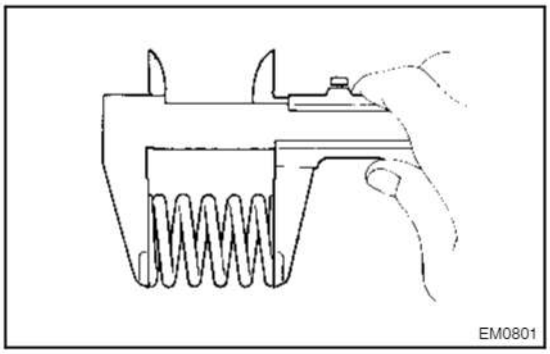

(b) Using vernier calipers, measure the free length of the valve spring.

Free length:
54.1 mm (2.130 in.)

If the free length is not as specified, replace the valve spring.

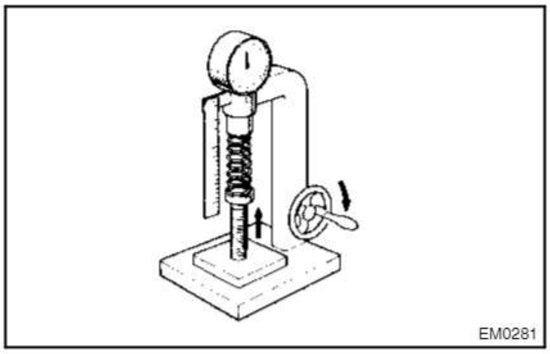

(c) Using a spring tester, measure the tension of the valve spring at the specified installed length.

Installed tension:
204 – 226 N (20.8 – 23.0 kgf, 45.9 – 50.7 lbf)
at 35.0 mm (1.378 in.)

If the installed tension is not as specified, replace the valve spring.

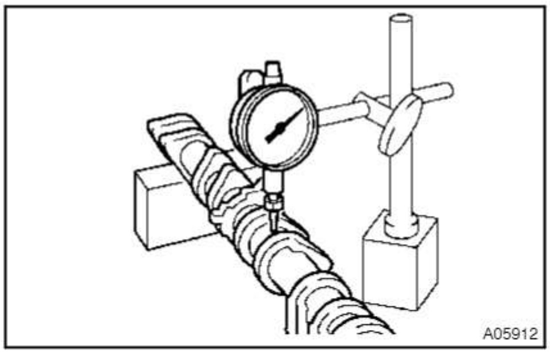

13. INSPECT CAMSHAFT FOR RUNOUT

(a) Place the camshaft on V–blocks.

(b) Using a dial indicator, measure the circle runout at the center journal.

Maximum circle runout:
0.08 mm (0.0031 in.)

If the circle runout is greater than maximum, replace the camshaft.

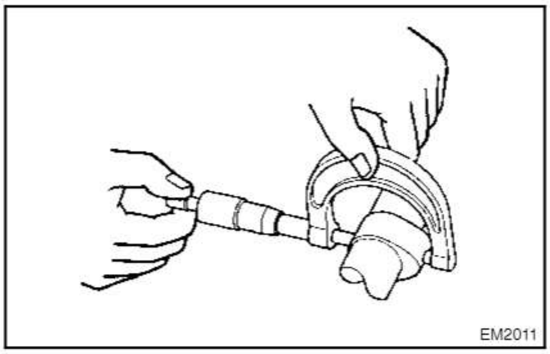

14. INSPECT CAM LOBES

Using a micrometer, measure the cam lobe height.

Standard cam lobe height:
Intake:
41.94 – 42.04 mm (1.6512 – 1.6551 in.)
Exhaust:
41.96 – 42.06 mm (1.6520 – 1.6559 in.)
Minimum cam lobe height:
Intake:
41.79 mm (1.6453 in.)
Exhaust:
41.81 mm (1.6461 in.)

If the cam lobe height is less than minimum, replace the camshaft.

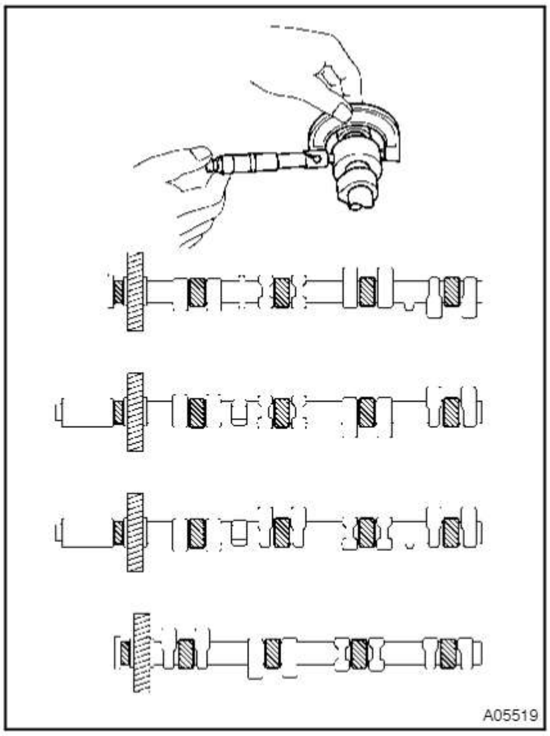

15. INSPECT CAMSHAFT JOURNALS

Using a micrometer, measure the journal diameter.

Journal diameter:
26.954 – 26.970 mm (1.0612 – 1.0618 in.)

If the journal diameter is not as specified, check the oil clearance.

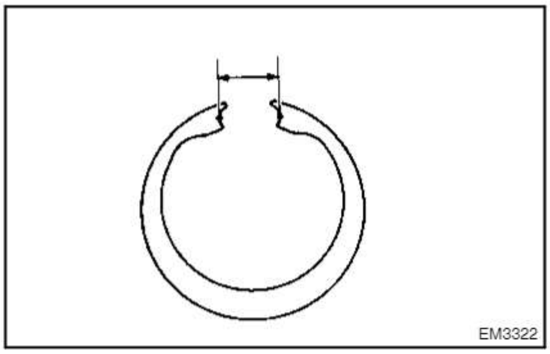

16. INSPECT CAMSHAFT GEAR SPRING

Using vernier calipers, measure the free distance between the spring ends.

Free distance:
18.2 – 18.8 mm (0.712 – 0.740 in.)

If the free distance is not as specified, replace the gear spring.

17. INSPECT CAMSHAFT BEARINGS

Check that bearings for flaking and scoring.

If the bearings are damaged, replace the bearing caps and cylinder head as a set.

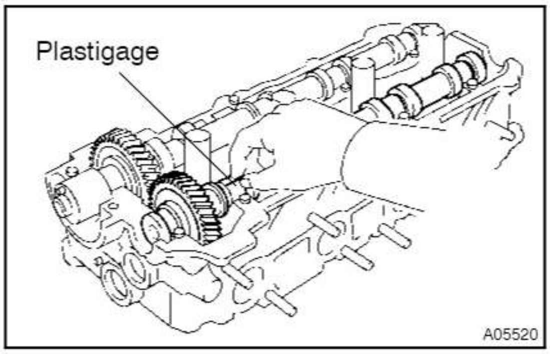

18. INSPECT CAMSHAFT JOURNAL OIL CLEARANCE

(a) Clean the bearing caps and camshaft journals.
(b) Place the camshafts on the cylinder head.
(c) Lay a strip of Plastigage across each of the camshaft journals.

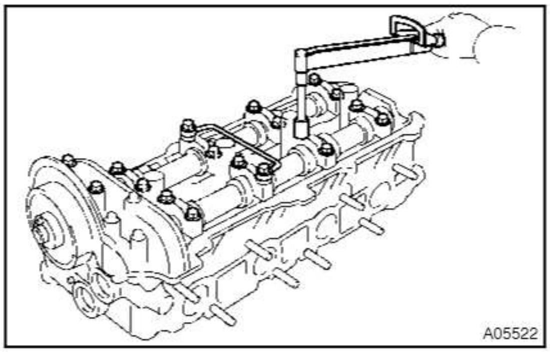

(d) Install the bearing caps.
(See page EM–55)
Torque: 16 N·m (160 kgf·cm, 12 ft·lbf)

NOTICE:
Do not turn the camshaft.

(e) Remove the bearing caps.

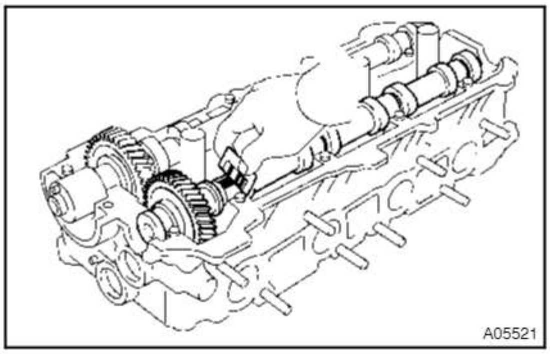

(f) Measure the Plastigage at its widest point.

Maximum oil clearance:

0.10 mm (0.0039 in.)

If the oil clearance is greater than maximum, replace the camshaft. If necessary, replace the bearing caps and cylinder head as a set.

(g) Completely remove the plastigage.

(h) Remove the camshafts.

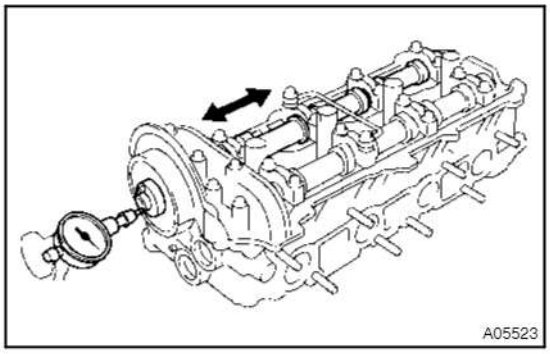

19. INSPECT CAMSHAFT THRUST CLEARANCE

(a) Install the camshaft.

(See page EM–55)

(b) Using a dial indicator, measure the thrust clearance while moving the camshaft back and forth.

Standard thrust clearance:

Intake

0.040 – 0.090 mm (0.0016 – 0.0035 in.)

Exhaust

0.040 – 0.085 mm (0.0016 – 0.0033 in.)

Maximum thrust clearance:

0.12 mm (0.0047 in.)

If the thrust clearance is greater than maximum, replace the camshaft. If necessary, replace the bearing caps and cylinder head as a set.

(c) Remove the camshafts.

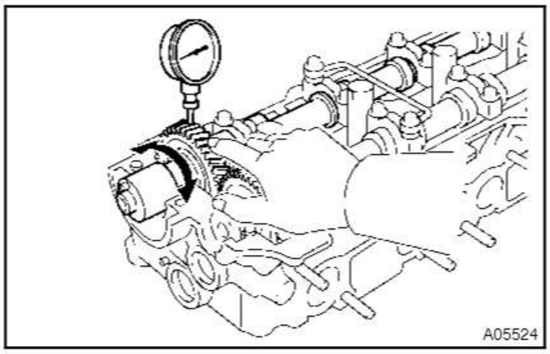

20. INSPECT CAMSHAFT GEAR BACKLASH

(a) Install the camshafts without installing the exhaust cam sub–gear and front bearing cap.

(See page EM–55)

(b) Using a dial indicator, measure the backlash.

Standard backlash:

0.020 – 0.200 mm (0.0008 – 0.0079 in.)

Maximum backlash:

0.30 mm (0.0188 in.)

If the backlash is greater then maximum, replace the camshafts.

(c) Remove the camshafts.

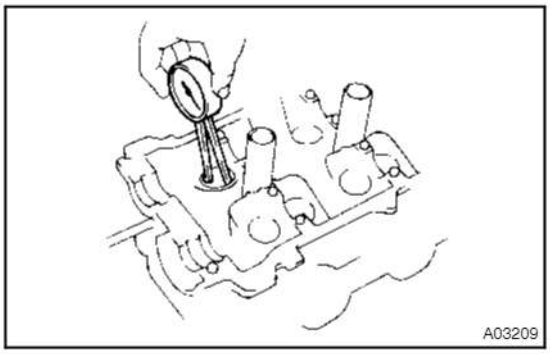

21. INSPECT VALVE LIFTERS AND LIFTER BORES

(a) Using a caliper gauge, measure the lifter bore diameter of the cylinder head.
Lifter bore diameter:
31.000 – 31.016 mm (1.2205 – 1.2211 in.)

(b) Using a micrometer, measure the lifter diameter at the valve lifter center line, 12.3 – 12.7 mm (0.484 – 0.500 in.) from the valve lifter head.
Lifter diameter:
30.966 – 30.976 mm (1.2191 – 1.2195 in.)

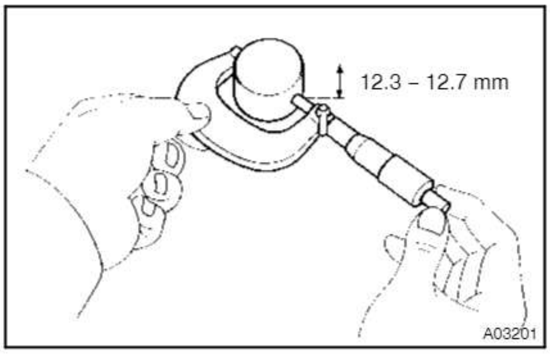

(c) Subtract the lifter diameter measurement from the lifter bore diameter measurement.
Standard oil clearance:
0.024 – 0.050 mm (0.0009 – 0.0020 in.)
Maximum oil clearance:
0.07 mm (0.0028 in.)

If the oil clearance is greater than maximum, replace the lifter. If necessary, replace the cylinder head.

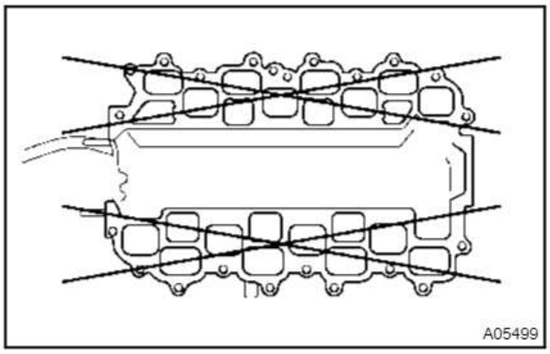

22. INSPECT INTAKE MANIFOLD

(a) Upper intake manifold:
Using a precision straight edge and feeler gauge, measure the surface contacting the lower intake manifold for warpage.
Maximum warpage: 0.15 mm (0.0059 in.)

If warpage is greater than maximum, replace the upper intake manifold.

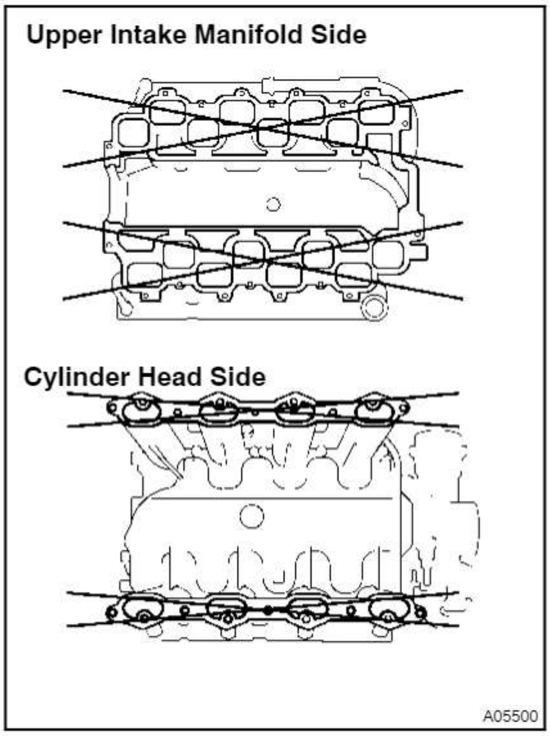

(b) Lower intake manifold:
Using a precision straight edge and feeler gauge, measure the surface contacting the cylinder head and upper intake manifold for warpage.
Maximum warpage:
0.15 mm (0.0059 in.)

If warpage is greater than maximum, replace the lower intake manifold.

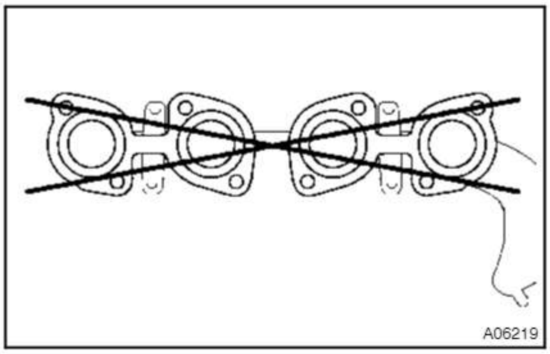

23. INSPECT EXHAUST MANIFOLD

Using a precision straight edge and feeler gauge, measure the surface contacting the cylinder head for warpage.

Maximum warpage:
0.50 mm (0.0197 in.)

If warpage is greater than maximum, replace the manifold.

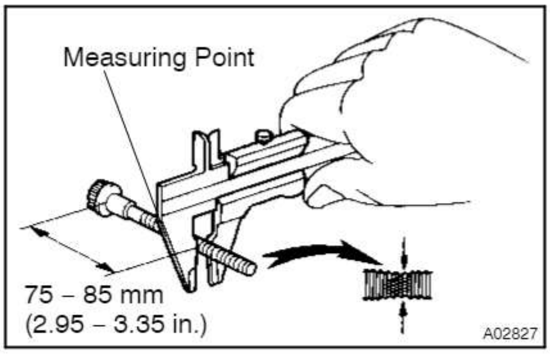

24. INSPECT CYLINDER HEAD BOLTS

Using vernier calipers, measure the thread outside diameter of the bolt.

Standard outside diameter:
9.810 – 9.960 mm (0.3862 – 0.3921 in.)
Minimum outside diameter:
9.700 mm (0.3819 in.)

If the diameter is less than minimum, replace the bolt.

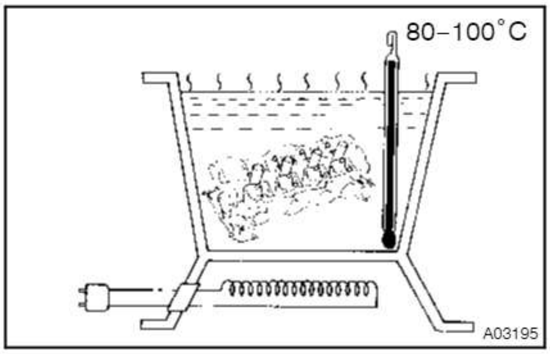

REPLACEMENT

1. REPLACE VALVE GUIDE BUSHINGS

(a) Gradually heat the cylinder head to 80 – 100°C (176 – 212°F).

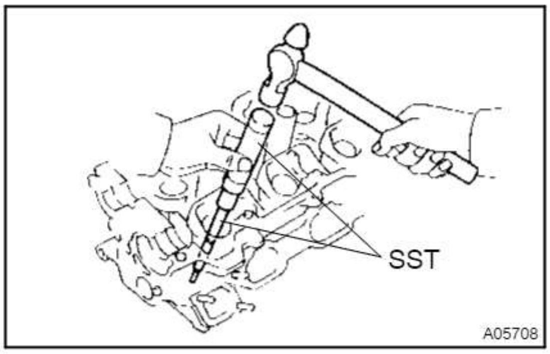

(b) Using SST and a hammer, tap out the guide bushing.
SST 09201–01055,
09950–70010 (09951–07100)

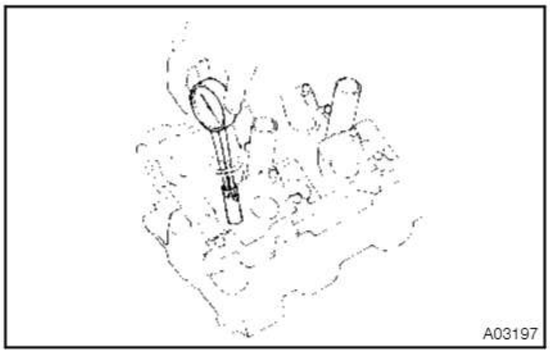

(c) Using a caliper gauge, measure the bushing bore diameter of the cylinder head.

Both intake and exhaust

Bushing bore diameter mm (in.)	Bushing size
10.285 – 10.306 (0.4049 – 0.4057)	Use STD
10.335 – 10.356 (0.4069 – 0.4077)	Use O/S STD

(d) Select a new guide bushing (STD or O/S 0.05).
If the bushing bore diameter of the cylinder head is greater than 10.306 mm (0.4057 in.), machine the bushing bore to the following dimension:

10.335 – 10.356 mm (0.4069 – 0.4077 in.)

If the bushing bore diameter of the cylinder head is greater than 10.356 mm (0.4077 in.), replace the cylinder head.

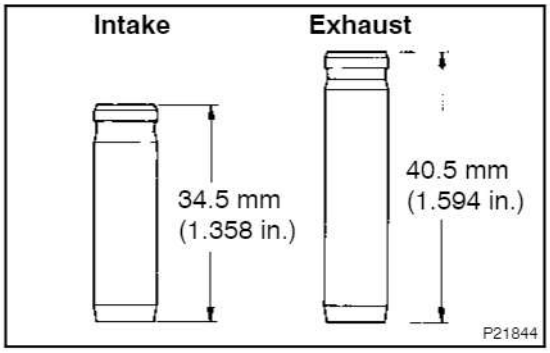

HINT:
Different the bushings are used for the intake and exhaust.

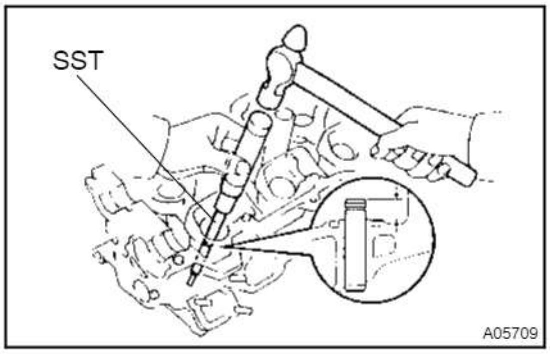

(e) Gradually heat the cylinder head to 80 – 100°C (176 – 212°F).

(f) Using SST and a hammer, tap in a new guide bushing to the specified protrusion height.

Protrusion height:

Intake

9.2 – 9.8 mm (0.362 – 0.386 in.)

Exhaust

8.2 – 8.8 mm (0.323 – 0.346 in.)

SST 09201–01055,
09950–70010 (09951–07100)

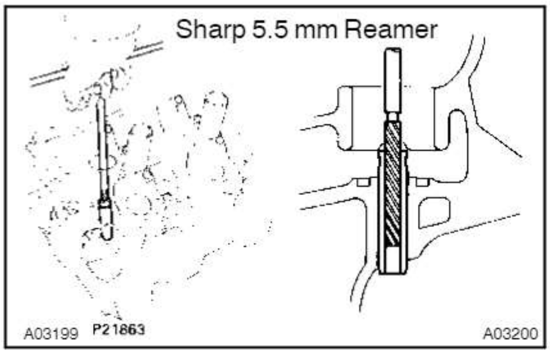

(g) Using a sharp 5.5 mm reamer, ream the guide bushing to obtain the standard specified clearance (See page EM–41) between the guide bushing and valve stem.

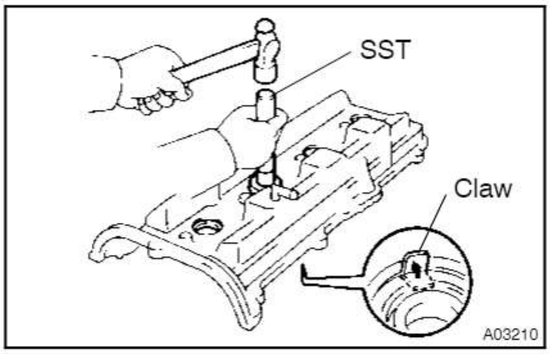

2. REPLACE SPARK PLUG TUBE GASKETS

(a) Bend the ventilation case claw installed on the cylinder head cover to an angle of 90° or more.

(b) Using SST and a hammer, tap out the gasket.

SST 09950–60010 (09551–00240, 09951–00460,
09952–06010, 90155–60003),
09950–70010 (09951–07100)

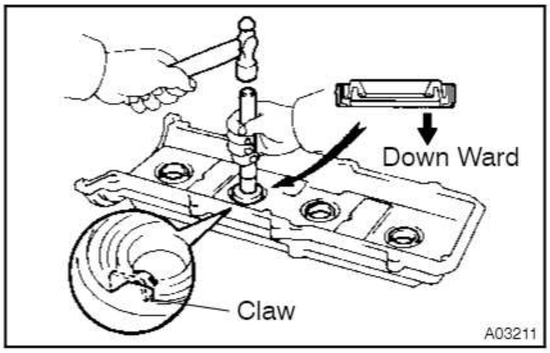

(c) Using SST and a hammer, tap in a new gasket until its surface is flush with the upper edge of the cylinder head cover.

SST 09950–60010 (09551–00240, 09951–00460,
09952–06010, 90155–60003),
09950–70010 (09951–07100)

NOTICE:

Be careful of the installation direction.

(d) Apply a light coat of MP grease to the gasket lip.

(e) Return the ventilation case claw to its original position.

EM0TT–01

REASSEMBLY

HINT:

- Thoroughly clean all parts to be assembled.
- Before installing the parts, apply new engine oil to all sliding and rotating surfaces.
- Replace all gaskets and oil seals with new ones.

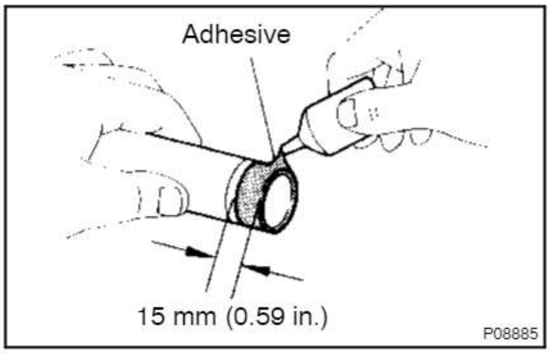

1. INSTALL SPARK PLUG TUBES

HINT:

When using a new cylinder head, spark plug tubes must be installed.

(a) Apply adhesive to the end of the spark plug tube.
Adhesive:
Part No. 08833–00070, THREE BOND 1324
or equivalent

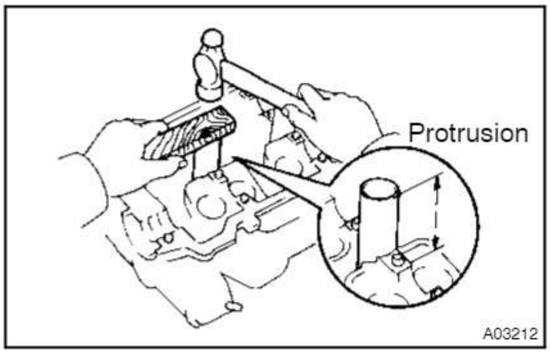

(b) Using a wooden block and hammer, tap in a new spark tube until there is 48.4 – 49.6 mm (1.906 – 1.953 in.) protruding from the camshaft bearing cap installation surface of the cylinder head.

NOTICE:

Avoid tapping a new spark plug tube in too far by measuring the amount of the protrusion while tapping.

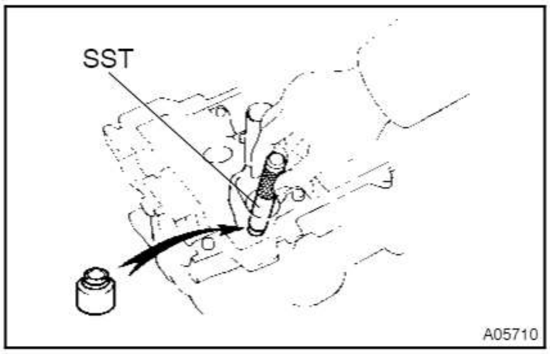

2. INSTALL VALVES

(a) Using SST, push in a new oil seal.
SST 09201–41020

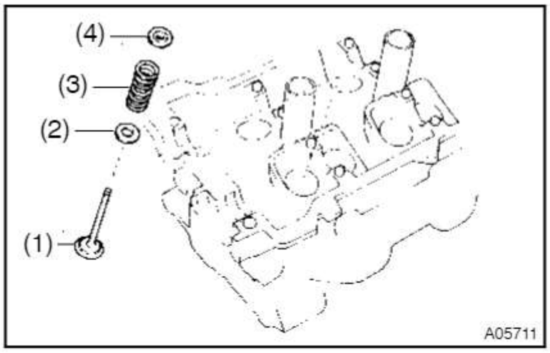

(b) Install these parts:
  (1) Valve
  (2) Spring seat
  (3) Valve spring
  (4) Spring retainer

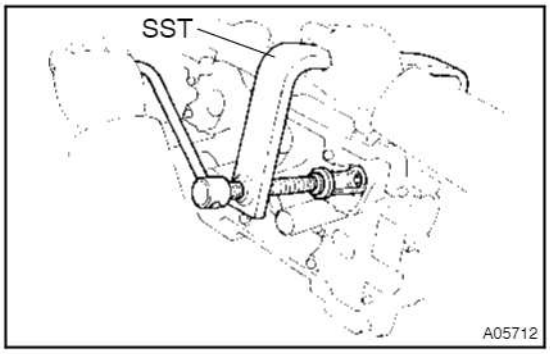

(c) Using SST, compress the valve spring and place the 2 keepers around the valve stem.
SST 09202–70020 (09202–00010)

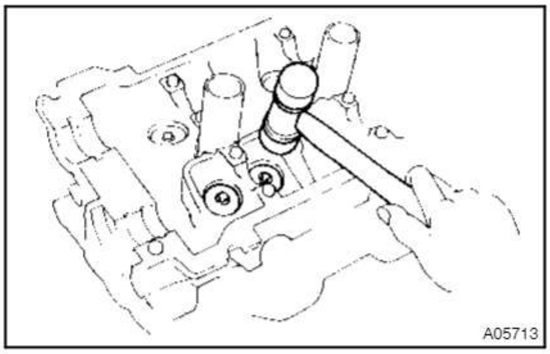

(d) Using a plastic–faced hammer and the valve stem (not in use) tip wound with vinyl tape, lightly tap the valve stem tip to assure proper fit.

NOTICE:

Be careful not to damage the valve stem tip.

3. INSTALL SHIMS AND VALVE LIFTERS

(a) Install the shim and valve lifter.
(b) Check that the valve lifter rotates smoothly by hand.

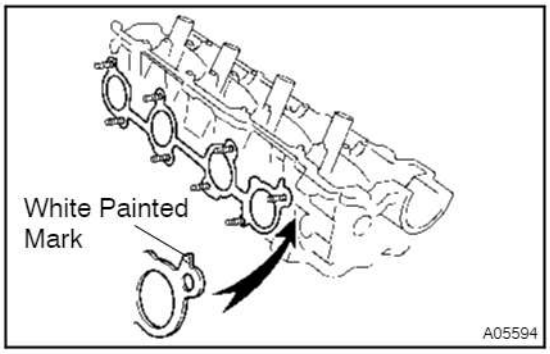

INSTALLATION

1. INSTALL RH EXHAUST MANIFOLD TO CYLINDER HEAD

(a) Place a new gasket on the cylinder head with the white painted marks facing the manifold side.

NOTICE:
Be careful of the installation direction.

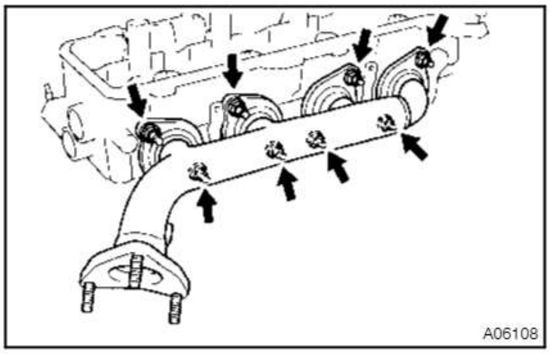

(b) Install the exhaust manifold with 8 new nuts. Uniformly tighten the nuts in several passes.
Torque: 44 N·m (450 kgf·cm, 32 ft·lbf)

(c) Install the heat insulator with the 4 bolts.

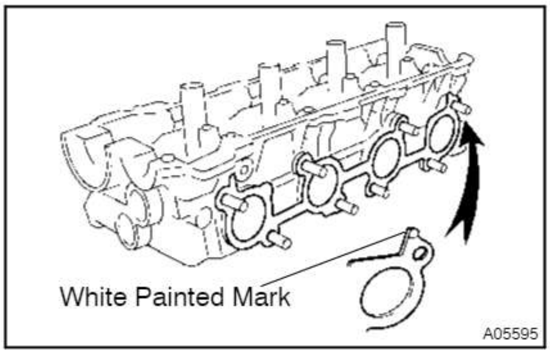

2. INSTALL LH EXHAUST MANIFOLD TO CYLINDER HEAD

(a) Place a new gasket on the cylinder head with the white painted marks facing the manifold side.

NOTICE:
Be careful of the installation direction.

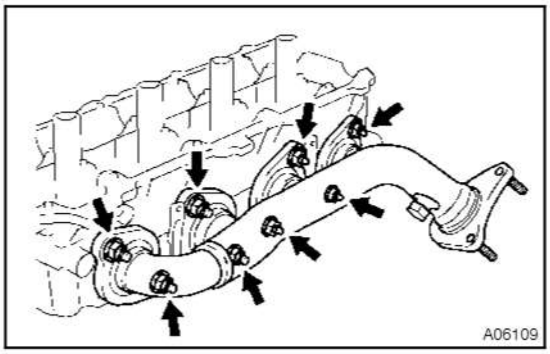

(b) Install the exhaust manifold with 8 new nuts. Uniformly tighten the nuts in several passes.
Torque: 44 N·m (450 kgf·cm, 32 ft·lbf)

(c) Install the heat insulator with the 4 bolts.

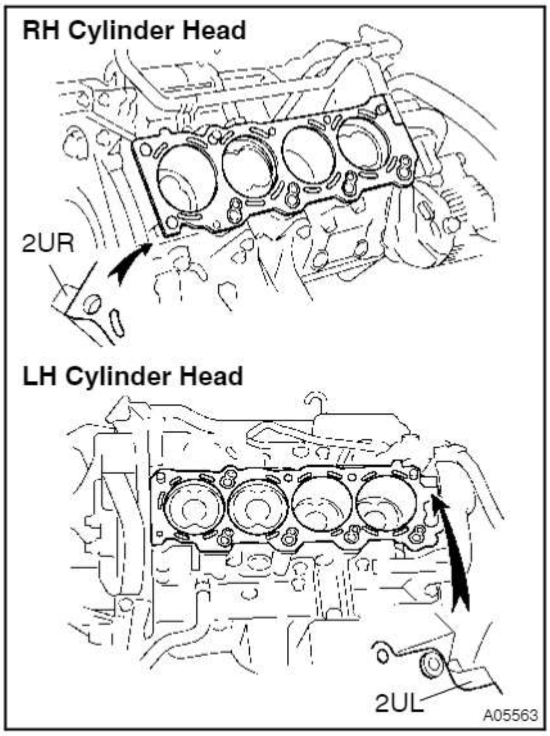

3. PLACE CYLINDER HEAD ON CYLINDER BLOCK

(a) Place 2 new cylinder head gaskets in position on the cylinder block.

HINT:

On the rear side of the cylinder head gasket are marks to distinguish the LH and RH banks, a "2UR" mark for the RH bank and a "2UL" mark for the LH bank.

NOTICE:

Be careful of the installation direction.

(b) Place the 2 cylinder heads in position on the cylinder head gaskets.

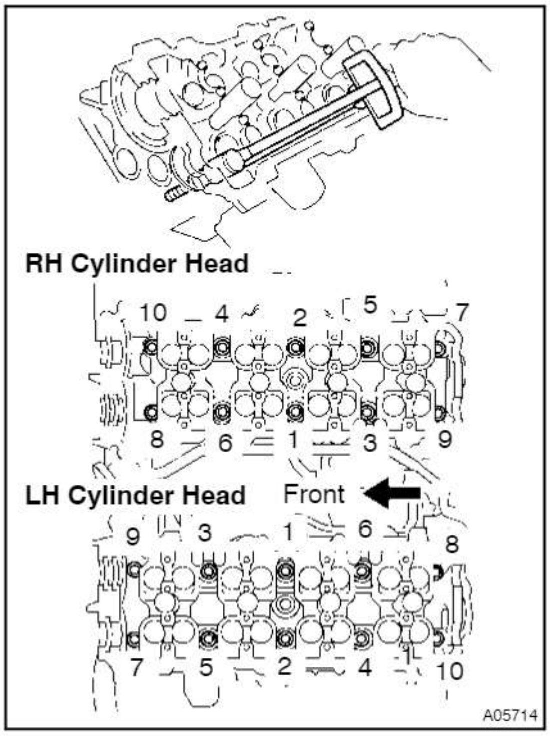

4. INSTALL CYLINDER HEAD BOLTS

HINT:

- The cylinder head bolts are tightened in 2 progressive steps (steps (c) and (e)).
- If any cylinder head bolt is broken or deformed, replace it.

(a) Apply a light coat of engine oil on the threads and under the heads of the cylinder head bolts.

(b) Install the plate washer to the cylinder head bolt.

(c) Install and uniformly tighten the 10 cylinder head bolts on one side of the cylinder head in several passes in the sequence shown, then do the other side as shown.

Torque: 32 N·m (325 kgf·cm, 24 ft·lbf)

If any one of the cylinder head bolts does not meet the torque specification, replace the cylinder head bolt.

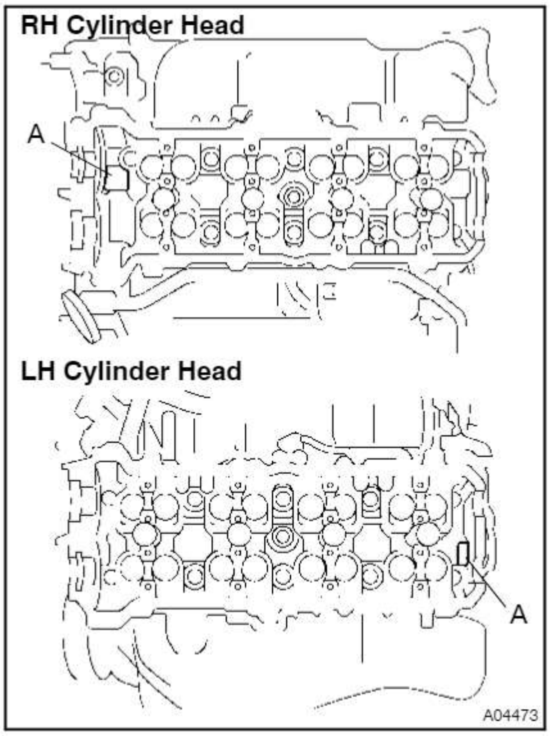

NOTICE:

Do not drop the plate washer for cylinder head bolt into portion A of the cylinder head. If dropped into portion A, the plate washer will pass through the cylinder head and cylinder block into the oil pan.

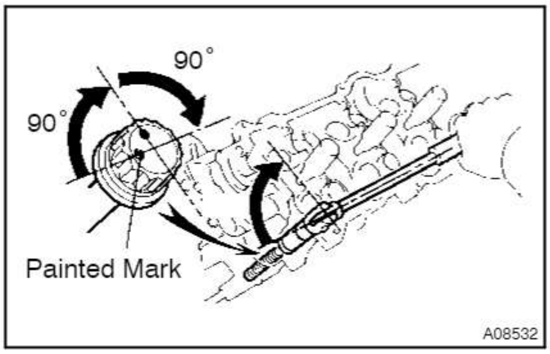

(d) Mark the front of the cylinder head bolt head with paint.

(e) Retighten the cylinder head bolts by 90° in the numerical order shown.

(f) Retighten the cylinder head bolts by an additional 90°.

(g) Check that the painted mark is now at a 180° angle to front.

5. **INSTALL SPARK PLUGS**

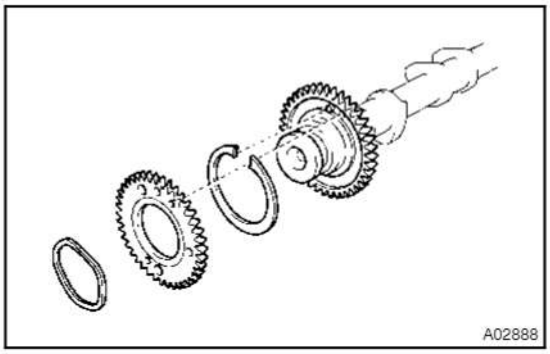

6. **ASSEMBLE EXHAUST CAMSHAFT**

(a) Install these parts:
  (1) Camshaft gear spring
  (2) Camshaft sub–gear

HINT:

Attach the pins on the gears to the gear spring ends.

  (3) Wave washer

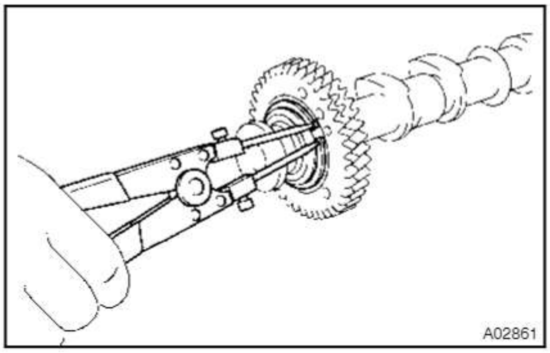

(b) Using snap ring pliers, install the snap ring.

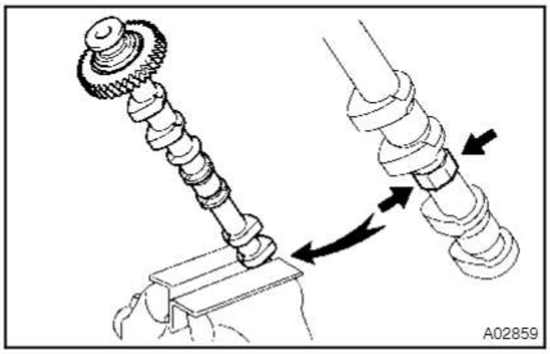

(c) Mount the hexagon wrench head portion of the camshaft in a vise.

NOTICE:
Be careful not to damage the camshaft.

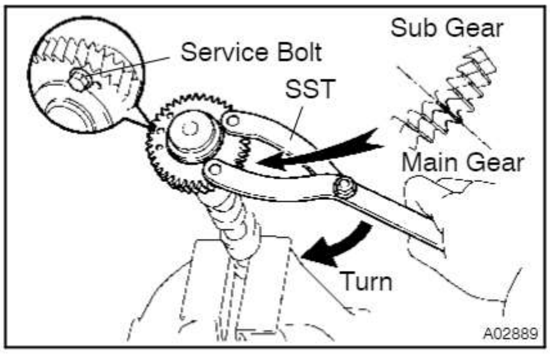

(d) Using SST, align the holes of the camshaft main gear and sub–gear by turning camshaft sub–gear counterclockwise, and temporarily install a service bolt.
SST 09960–10010 (09962–01000, 09963–00500)

(e) Align the gear teeth of the main gear and sub–gear, and tighten the service bolt.

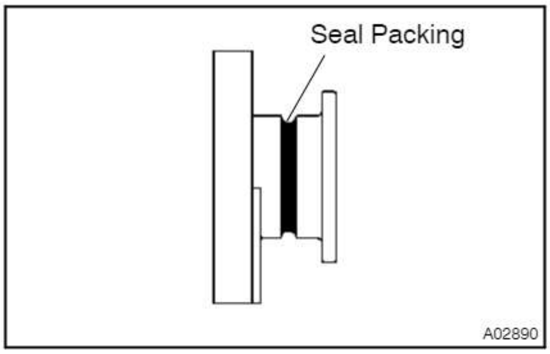

7. INSTALL CAMSHAFT HOUSING PLUGS

(a) Remove any old packing (FIPG) material.

(b) Apply seal packing to the camshaft housing plug grooves.
Seal packing:
Part No. 08826–00080 or equivalent

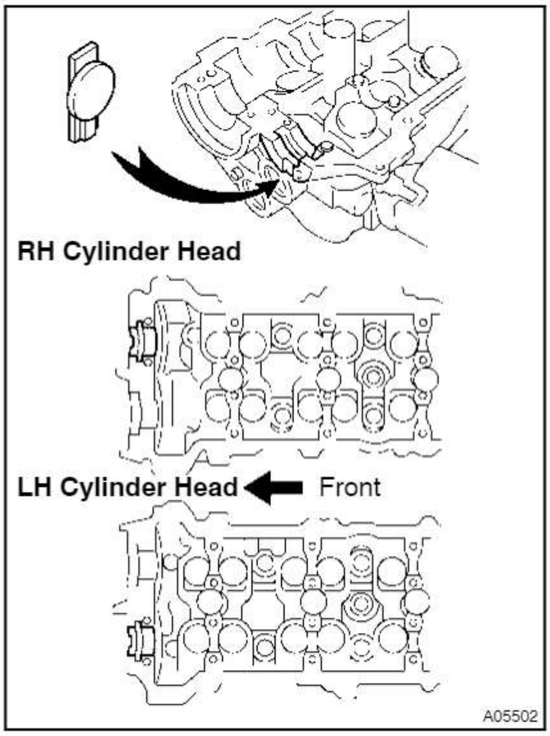

(c) Install the 2 camshaft housing plugs to the cylinder heads.

8. INSTALL CAMSHAFTS

NOTICE:

Since the thrust clearance of the camshaft is small, the camshaft must be kept level while it is being installed. If the camshaft is not kept level, the portion of the cylinder head receiving the shaft thrust may crack or be damaged, causing the camshaft to seize or break. To avoid this, the following steps should be carried out.

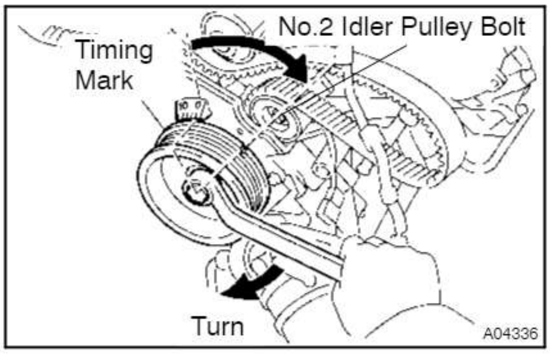

(a) Set the crankshaft pulley position.

Turn the crankshaft pulley clockwise or counterclockwise, and put the timing mark of the crankshaft pulley in line with the centers of the crankshaft pulley bolt and idler pulley bolt.

NOTICE:

Having the crankshaft pulley at the wrong angle can cause the piston head and valve head to come into contact with each other when you install the camshaft, causing damage. So always set the crankshaft pulley at the correct angle.

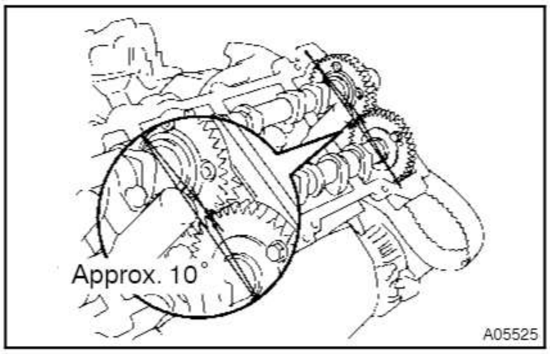

(b) Install the RH camshafts.

(1) Apply MP grease to the thrust portion of the intake and exhaust camshafts.

(2) Place the intake and exhaust camshafts.

(3) Set the timing mark (1 dot mark) of the camshaft main gear at approx. 10° angle.

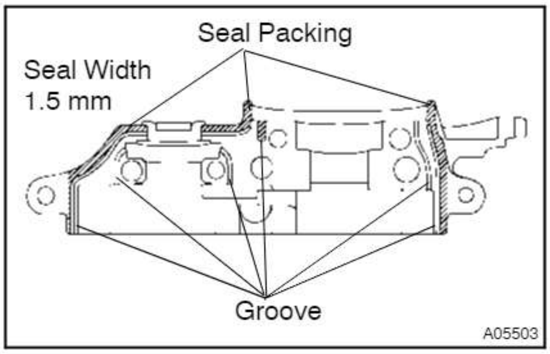

(4) Remove any old packing (FIPG) material from front bearing cap.

(5) Apply seal packing to the front bearing cap as shown in the illustration.

Seal packing: Part No. 08826–00080 or equivalent

- Install a nozzle that has been cut to a 1.5 mm (0.06 in.) opening.
- Parts must be assembled within 5 minutes of application. Otherwise the material must be removed and reapplied.
- Immediately remove nozzle from the tube and reinstall cap.

NOTICE:

Do not apply seal packing to the front bearing cap grooves.

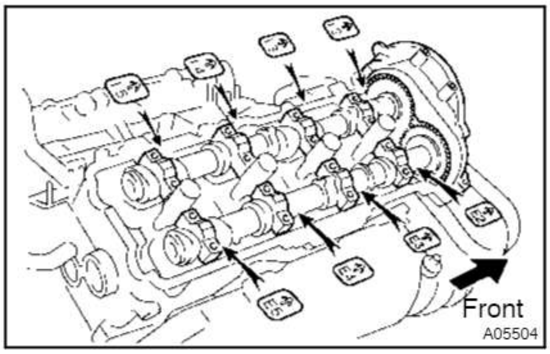

(6) Install the front bearing cap.

HINT:

Installing the front bearing cap will determine the thrust portion of the camshaft.

(7) Install the other bearing cap in the sequence shown with the arrow mark facing forward.

HINT:

Align the arrow marks at the front and rear of the cylinder head with the mark on the bearing cap.

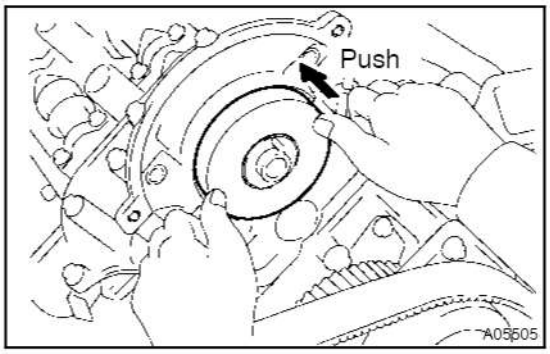

(8) Push in the camshaft oil seal.

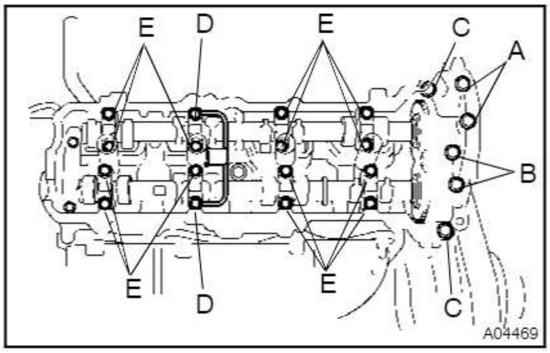

(9) Apply a light coat of engine oil on the threads and under the heads (D and E) of the bearing cap bolts.

HINT:

Do not apply engine oil under the heads of the bearing cap bolt (A), (B) and (C).

(10) Install the oil feed pipe and the 22 bearing cap bolts as shown.

HINT:

Each bolt length is indicated in the illustration.

Bolt length:

94 mm (3.70 in.) for A
72 mm (2.83 in.) for B
25 mm (0.98 in.) for C
52 mm (2.05 in.) for D
38 mm (1.50 in.) for E

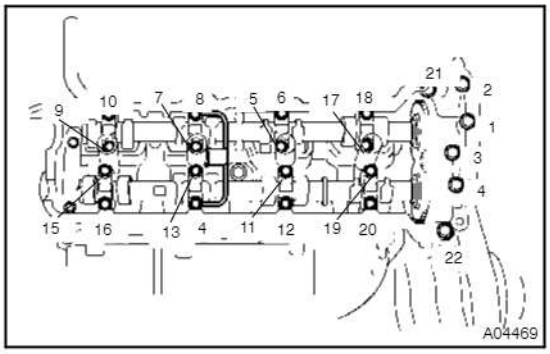

(11) Uniformly tighten the 22 bearing cap bolts in several passes, in the sequence shown.

Torque:
Bolt C: 7.5 N·m (80 kgf·cm, 69 in.·lbf)
Others: 16 N·m (160 kgf·cm, 12 ft·lbf)

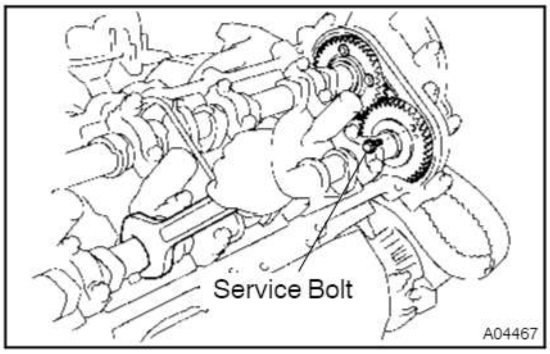

(12) Boring the service bolt installed in the driven sub–gear upward by turning the hexagon wrench head portion of the camshaft with a wrench.

(13) Remove the service bolt.

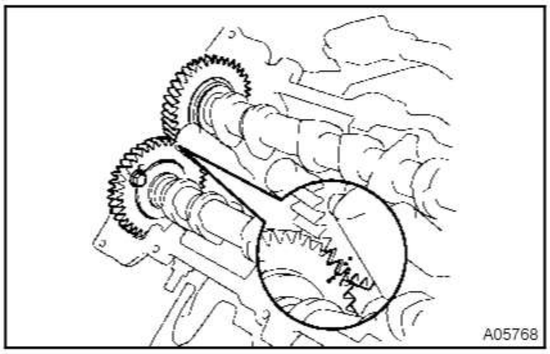

(c) Install the LH camshafts.

(1) Apply MP grease to the thrust portion of the intake and exhaust camshafts.

(2) Place the intake and exhaust camshafts.

(3) Engage the intake to the exhaust gear by meeting the timing marks (2 dot marks) on each gear.

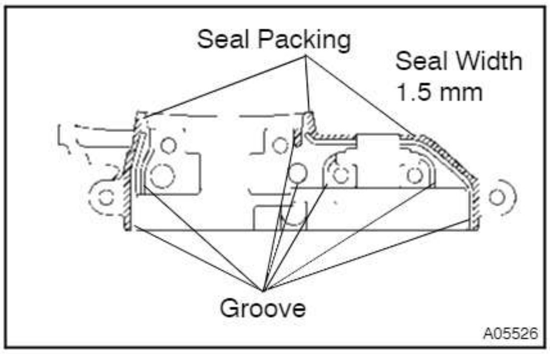

(4) Remove any old packing (FIPG) material.

(5) Apply seal packing to the front bearing cap.

Seal packing: Part No. 08826–00080 or equivalent

- Install a nozzle that has been cut to a 1.5 mm (0.06 in.) opening.
- Parts must be assembled within 5 minutes of application. Otherwise the material must be removed and reapplied.
- Immediately remove nozzle from the tube and reinstall cap.

NOTICE:

Do not apply seal packing to the front bearing cap grooves.

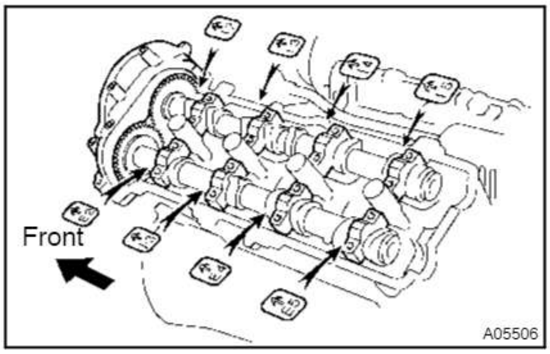

(6) Install the front bearing cap.

HINT:

Installing the front bearing cap will determine the thrust portion of the camshaft.

(7) Install the other bearing cap in the sequence shown with the arrow mark facing forward.

HINT:

Align the arrow marks at the front and rear of the cylinder head with the mark on the bearing cap.

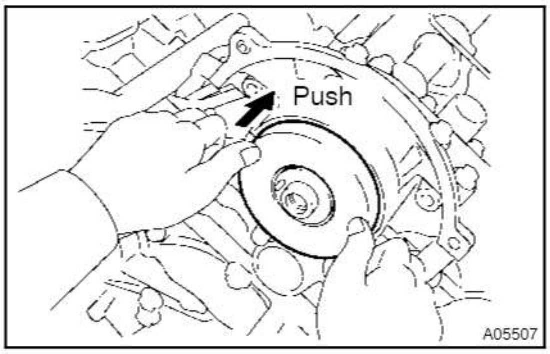

(8) Push in the camshaft oil seal.

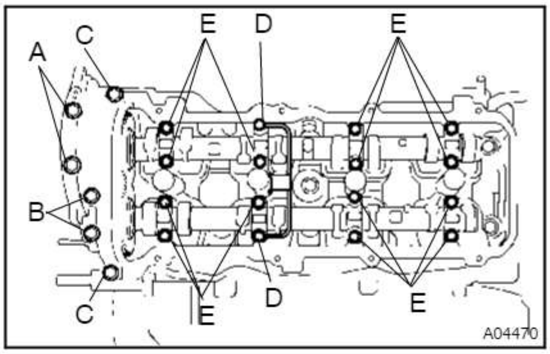

(9) Apply a light coat of engine oil on the threads and under the heads (D and E) of the bearing cap bolts.

HINT:

Do not apply engine oil under the heads of the bearing cap bolt (A), (B) and (C).

(10) Install the oil feed pipe and the 22 bearing cap bolts as shown.

HINT:

Each bolt length is indicated in the illustration.

Bolt length:

94 mm (3.70 in.) for A
72 mm (2.83 in.) for B
25 mm (0.98 in.) for C
52 mm (2.05 in.) for D
38 mm (1.50 in.) for E

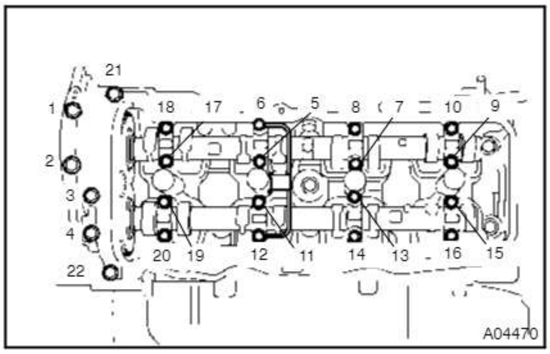

(11) Uniformly tighten the 22 bearing cap bolts in several passes, in the sequence shown.

Torque:
Bolt C: 7.5 N·m (80 kgf·cm, 69 in.·lbf)
Others: 16 N·m (160 kgf·cm, 12 ft·lbf)

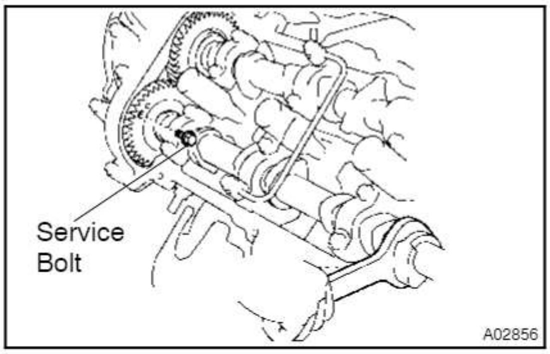

(12) Boring the service bolt installed in the driven sub–gear upward by turning the hexagon wrench head portion of the camshaft with a wrench.

(13) Remove the service bolt.

9. CHECK AND ADJUST VALVE CLEARANCE

(See page EM–6)

Turn the camshaft and position the cam lobe upward, and check and adjust the valve clearance.

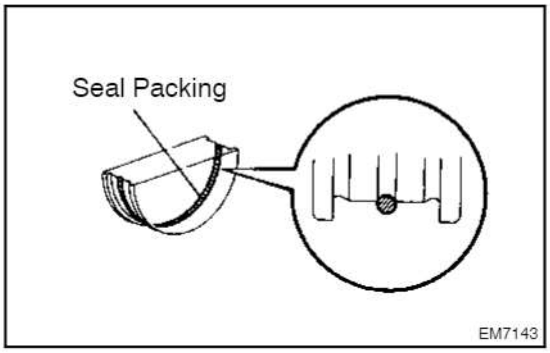

10. INSTALL SEMI–CIRCULAR PLUGS

(a) Remove any old packing (FIPG) material.

(b) Apply seal packing to the semi–circular plug grooves.

Seal packing: Part No. 08826–00080 or equivalent

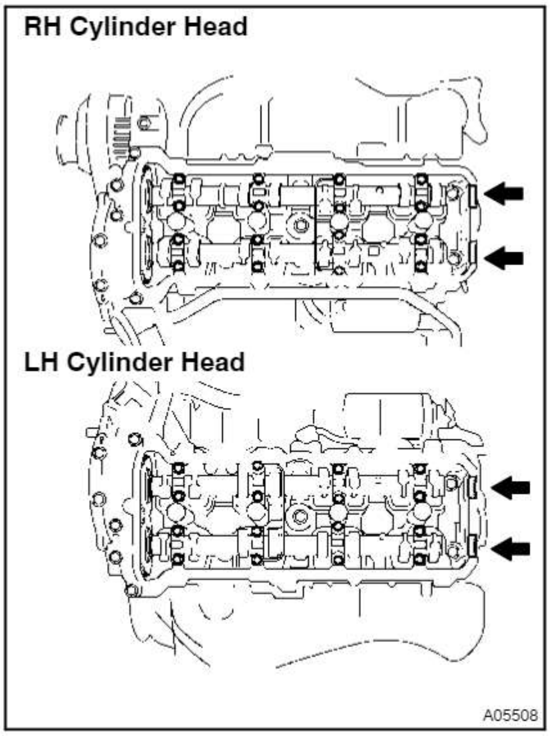

(c) Install the 4 semi–circular plugs to the cylinder heads.

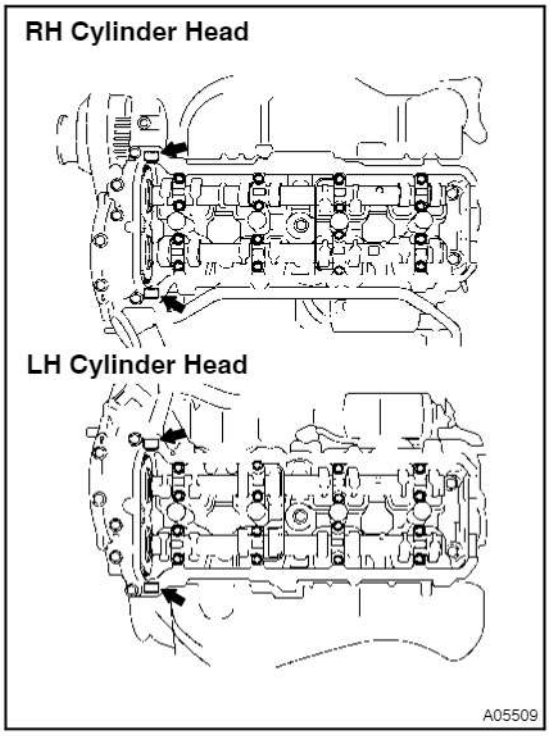

11. INSTALL CYLINDER HEAD COVER

(a) Remove any old packing (FIPG) material.

(b) Apply seal packing to the cylinder heads as shown in the illustration.

Seal packing: Part No. 08826–00080 or equivalent

(c) Install the gasket to the cylinder head cover.

(d) Install the seal washer to the bolt.

(e) Install the cylinder head cover with the 18 bolts. Uniformly tighten the bolts in several passes. Install the 2 cylinder head covers.

Torque: 6.0 N·m (60 kgf·cm, 53 in.·lbf)

12. INSTALL 2 ENGINE HANGERS

Torque: 37 N·m (380 kgf·cm, 27 ft·lbf)

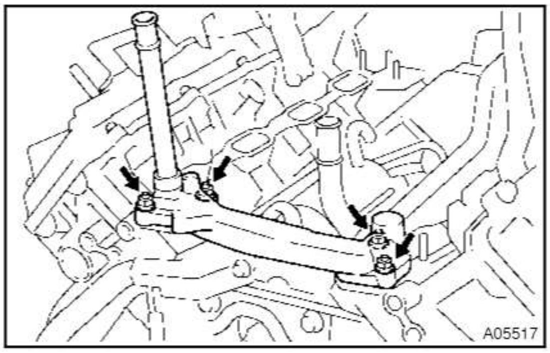

13. INSTALL REAR WATER BYPASS JOINT

(a) Install 2 new gaskets to the cylinder head.

(b) Install the 4 nuts holding the water bypass joint to the cylinder heads. Alternately tighten the nuts.

Torque: 18 N·m (185 kgf·cm, 13 ft·lbf)

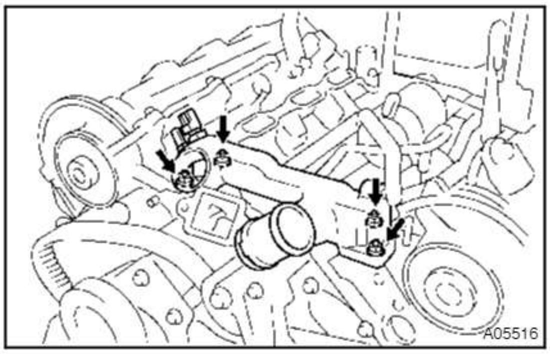

14. INSTALL FRONT WATER BYPASS JOINT

Install 2 new gaskets and the water bypass joint with the 4 nuts. Alternately tighten the nuts.

Torque: 18 N·m (185 kgf·cm, 13 ft·lbf)

15. INSTALL WATER INLET AND INLET HOUSING ASSEMBLY (See page CO–7)

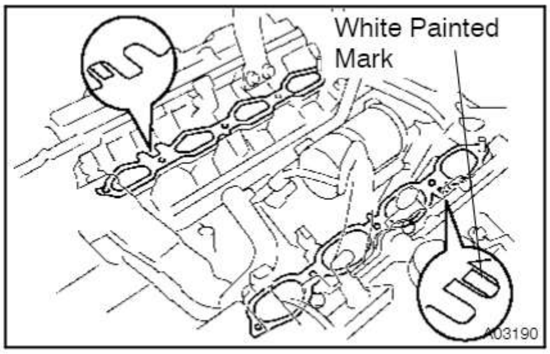

16. INSTALL INTAKE MANIFOLD ASSEMBLY

(a) Place 2 new gaskets on the cylinder heads with white painted mark facing upward.

NOTICE:

- **Align the port holes of the gasket and cylinder head.**
- **Be careful of the installation direction.**

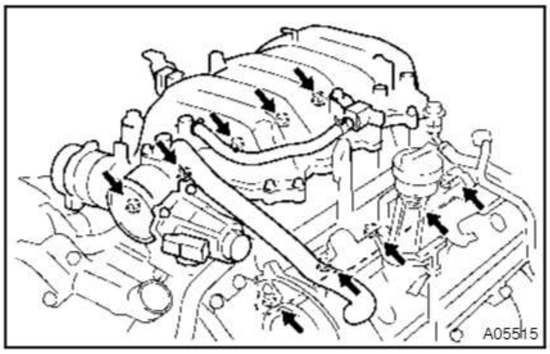

(b) Place the intake manifold assembly on the cylinder heads.

(c) Install and uniformly tighten the 6 bolts and 4 nuts in several passes.

Torque: 18 N·m (185 kgf·cm, 13 ft·lbf)

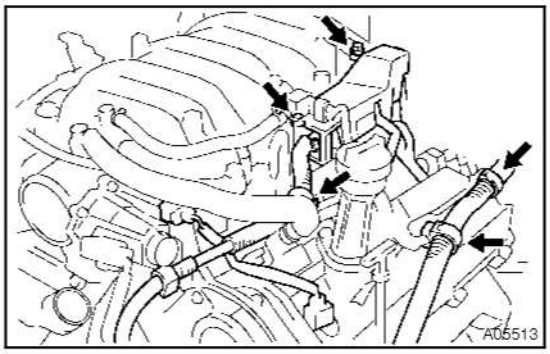

(d) Connect the wire protector to the intake manifold with the 2 bolts.

(e) Install the engine wire to the engine hanger.

(f) Install the engine wire to the LH No.1 timing belt rear plate.

(g) Install the engine wire to the bracket.

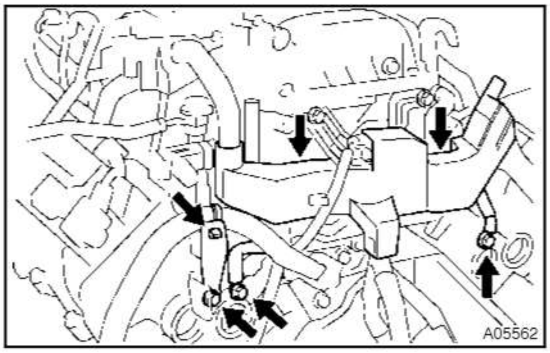

(h) Connect the wire protector to the rear water bypass joint and RH cylinder head with the 2 bolts.

(i) Install the 2 grounds cables to the RH and LH cylinder head.

(j) Install the guide for A/T bracket to the LH cylinder head.

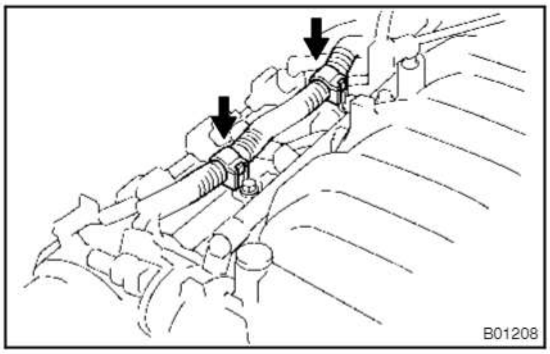

(k) Connect the 2 wire clamp to the wire clamp bracket on the RH delivery pipe.

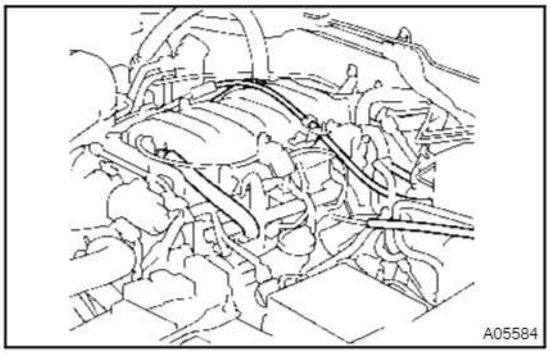

(l) Connect these hoses:
- Fuel pressure regulator vacuum hose to the fuel pressure regulator pipe.
- PCV hose to PCV valve on LH cylinder head
- PS air hose to intake manifold

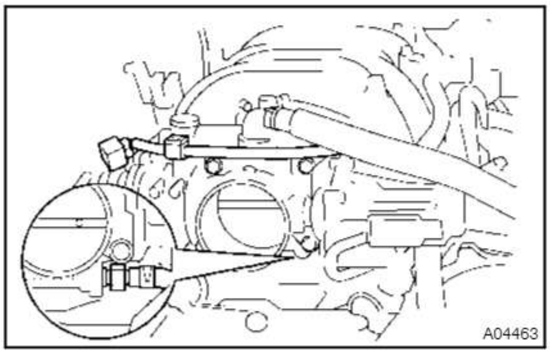

(m) No.1 water bypass hose (from water inlet housing) from throttle body

(n) Connect the 2 wire clamp to the throttle body.

(o) Connect these connectors:
- Throttle position sensor connector
- Accelerator pedal position sensor connector
- Throttle motor connector
- VSV connector for EVAP
- 8 injector connectors
- Water Temperature sensor
- Water sender gauge
- 8 ignition coil connector

(p) Connect the accelerator cable.

17. CONNECT FUEL INLET HOSE

18. INSTALL TIMING BELT REAR PLATES

(a) Install the RH timing belt rear plates.
Install the No.1 timing belt rear plate to the cylinder head with the 3 bolts and stud bolt.

Torque: 7.5 N·m (80 kgf·cm, 66 in.·lbf)

(b) Install the LH timing belt rear plates.
  (1) Connect the wire clamp to the No.1 timing belt rear plate.
  (2) Install the No.1 timing belt rear plate to the cylinder head with the 3 bolts.

Torque: 7.5 N·m (80 kgf·cm, 66 in.·lbf)

19. INSTALL IGNITION COILS (See page IG–7)

20. INSTALL OIL DIPSTICK AND GUIDE FOR A/T

21. INSTALL CAMSHAFT POSITION SENSOR (See page IG–11)

22. **INSTALL CAMSHAFT TIMING PULLEYS (See page EM–23)**
23. **CONNECT TIMING BELT TO CAMSHAFT TIMING PULLEYS (See page EM–23)**
24. **CHECK ENGINE OIL LEVEL**

CYLINDER BLOCK

COMPONENTS

EM0E9–05

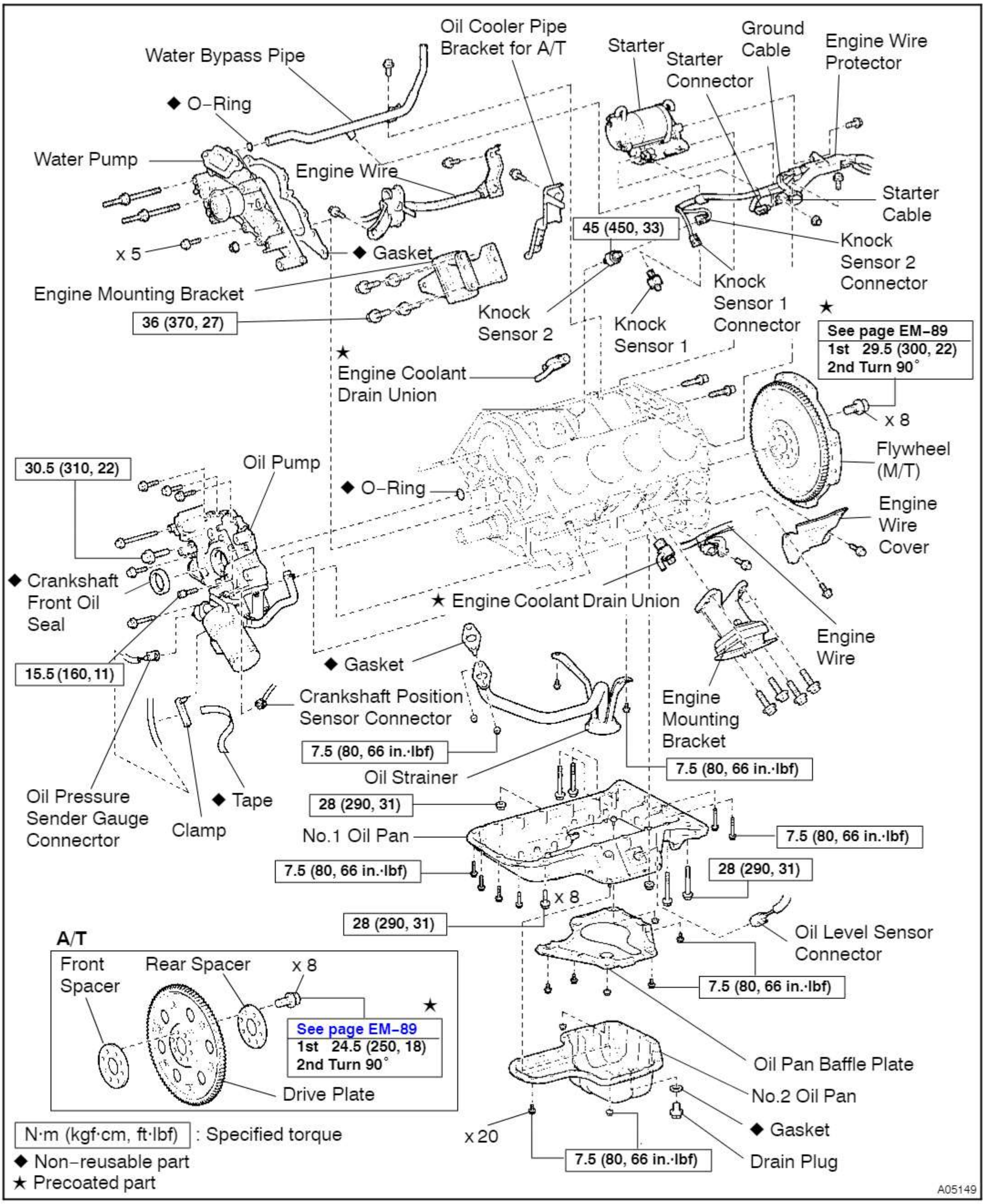

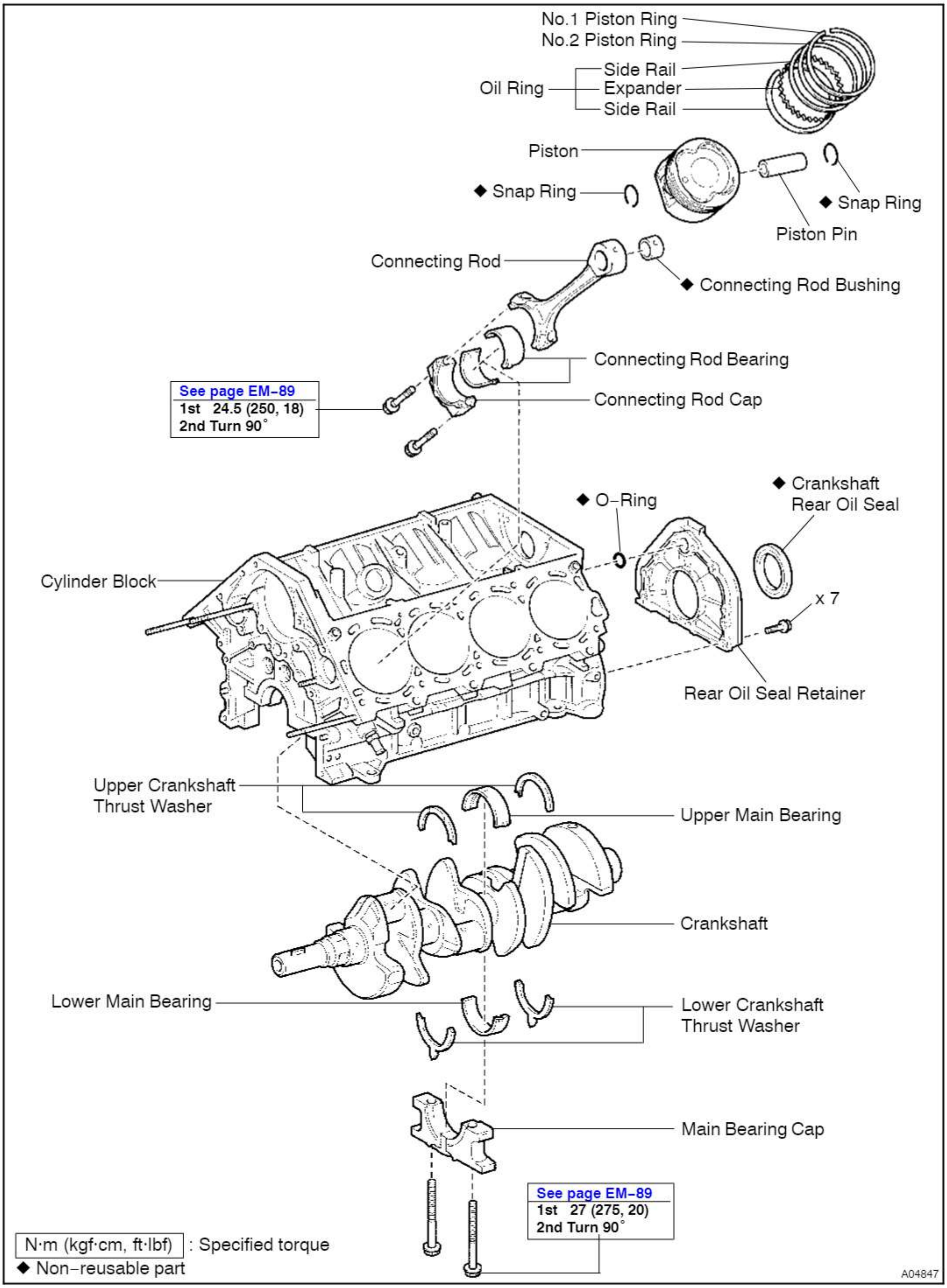
No.1 Piston Ring
No.2 Piston Ring
Oil Ring
Side Rail
Expander
Side Rail
Piston
◆ Snap Ring
◆ Snap Ring
Piston Pin
Connecting Rod
◆ Connecting Rod Bushing
Connecting Rod Bearing
See page EM–89
1st 24.5 (250, 18)
2nd Turn 90°
Connecting Rod Cap
◆ O–Ring
◆ Crankshaft Rear Oil Seal
Cylinder Block
x 7
Rear Oil Seal Retainer
Upper Crankshaft Thrust Washer
Upper Main Bearing
Crankshaft
Lower Main Bearing
Lower Crankshaft Thrust Washer
Main Bearing Cap
See page EM–89
1st 27 (275, 20)
2nd Turn 90°
N·m (kgf·cm, ft·lbf) : Specified torque
◆ Non–reusable part
A04847

DISASSEMBLY

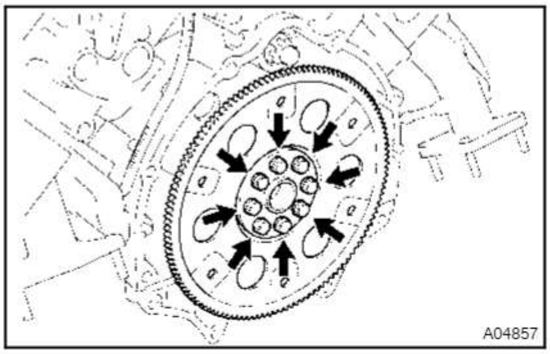

1. **A/T:**
   REMOVE DRIVE PLATE

Remove the 8 bolts, front spacer, drive plate and rear spacer.

2. **M/T:**
   REMOVE FLYWHEEL

Remove the 8 bolts and flywheel.

3. **INSTALL ENGINE TO ENGINE STAND**
4. **REMOVE TIMING BELT AND PULLEYS (See page EM–16)**
5. **REMOVE CYLINDER HEAD (See page EM–33)**

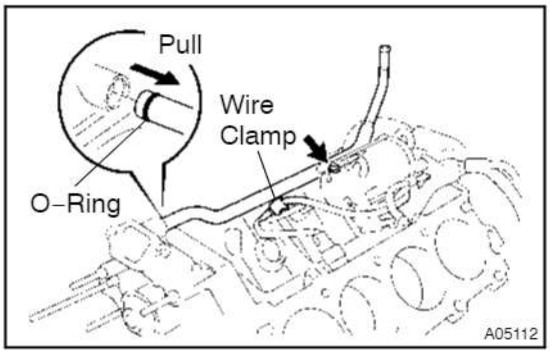

6. **REMOVE WATER BYPASS PIPE**

(a) Disconnect the wire clamp (for knock sensor 1, 2) from bracket of the water bypass pipe.
(b) Remove the bolt.
(c) Pull out the water bypass pipe from the water pump.
(d) Remove the O–ring from the water bypass pipe.

7. **REMOVE STARTER**
8. **REMOVE KNOCK SENSORS (See page FI–69)**

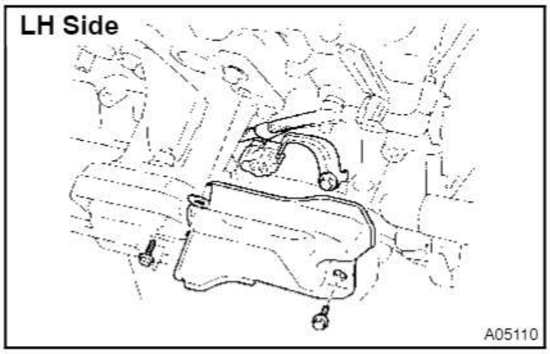

9. **Europe:**
   DISCONNECT ENGINE WIRE FROM LH SIDE OF CYLINDER BLOCK

(a) Remove the 2 bolts and engine wire cover from the LH side of the cylinder block.
(b) Disconnect the oil level sensor connector.
(c) Remove the bolt, disconnect the bracket on the engine wire from the cylinder block.

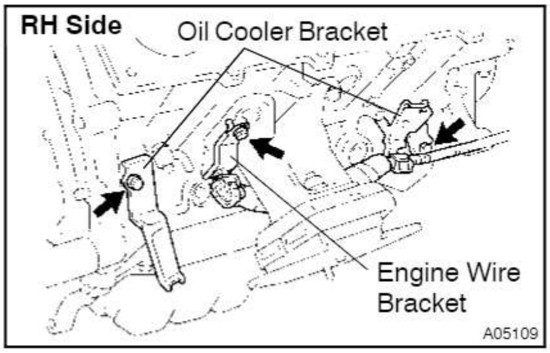

10. **Europe:**
    DISCONNECT ENGINE WIRE FROM RH SIDE OF CYLINDER BLOCK

Remove the 2 bolts, and disconnect the engine wire bracket and oil cooler bracket on the engine wire from the cylinder block.

11. **A/T:**
    REMOVE OIL COOLER PIPE BRACKET

(a) Europe:
Remove the bolt and bracket.

(b) Except Europe:
Remove the bolt and bracket. Remove the 2 brackets.

12. REMOVE ENGINE MOUNTING BRACKETS

Remove the 4 bolts and mounting bracket. Remove the 2 mounting brackets

13. REMOVE WATER PUMP (See page CO–5)

14. REMOVE NO.2 OIL PAN (See page LU–8)

15. REMOVE OIL PAN BAFFLE PLATE

16. REMOVE NO.1 OIL PAN (See page LU–8)

17. REMOVE OIL STRAINER

18. REMOVE OIL PUMP (See page LU–8)

19. REMOVE ENGINE COOLANT DRAIN UNIONS

Remove the 2 drain unions.

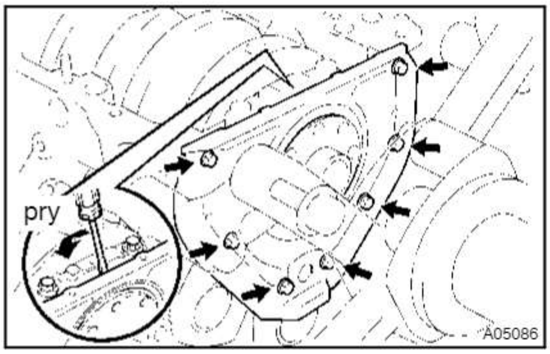

20. REMOVE REAR OIL SEAL RETAINER

(a) Remove the 7 bolts.

(b) Using a screwdriver, remove the oil seal retainer by prying the portions between the oil seal retainer and main bearing cap.

(c) Remove the O–ring.

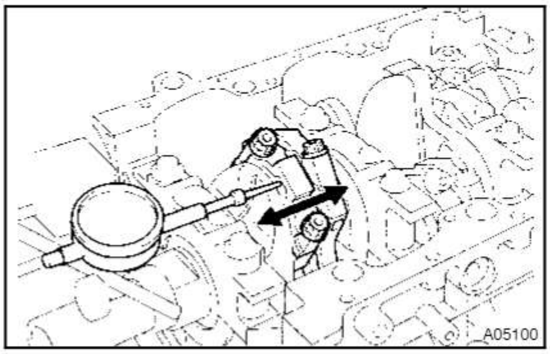

21. CHECK CONNECTING ROD THRUST CLEARANCE

Using a dial indicator, measure the thrust clearance while moving the connecting rod back an forth.

Standard thrust clearance:
0.160 – 0.290 mm (0.0063 – 0.0138 in.)
Maximum thrust clearance: 0.35 mm (0.0138 in.)

If the thrust clearance is greater than maximum, replace the connecting rod assembly(s). If necessary, replace the crankshaft.

Connecting rod thickness:
22.880 – 22.920 mm (0.9008 – 0.9024 in.)

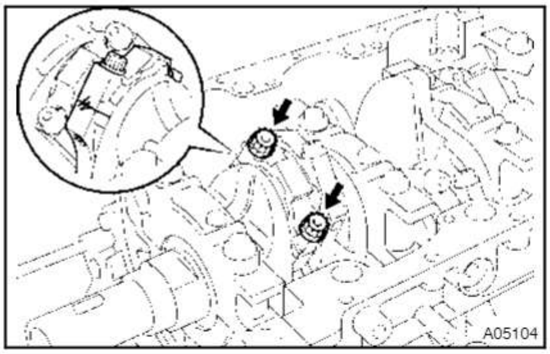

22. REMOVE CONNECTING ROD CAPS AND CHECK OIL CLEARANCE

(a) Check the matchmarks on the connecting rod and cap to ensure correct reassembly.

(b) Remove the 2 connecting rod cap bolts.

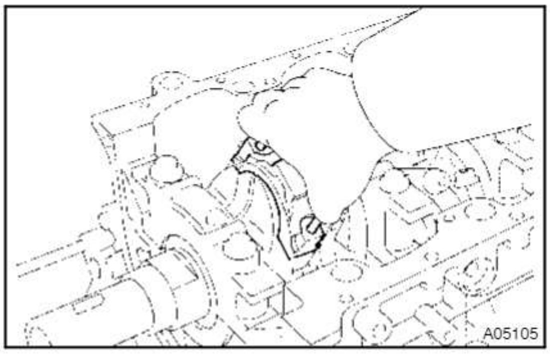

(c) Using the 2 removed connecting rod cap bolts, remove the connecting rod cap and lower bearing by wiggling the connecting rod cap right and left.

HINT:

Keep the lower bearing inserted with the connecting rod cap.

(d) Clean the crank pin and bearing.

(e) Check the crank pin and bearing for pitting and scratches.

If the crank pin or bearing is damaged, replace the bearings. If necessary, replace the crankshaft.

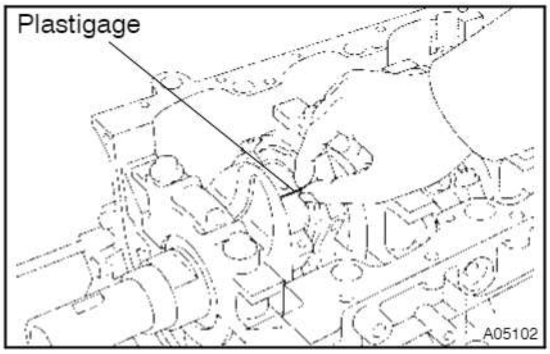

(f) Lay a strip of Plastigage across the crank pin.

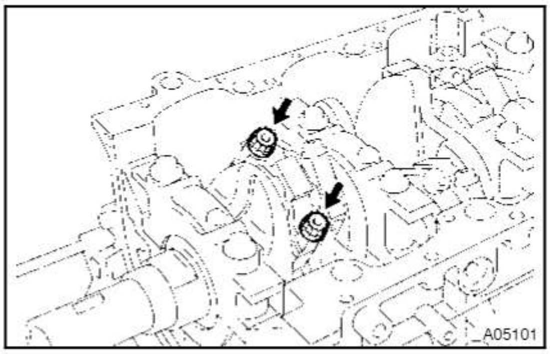

(g) Install the connecting rod cap with the 2 bolts. (See page EM–89)

NOTICE:

Do not turn the crankshaft.

(h) Remove the 2 bolts, connecting rod cap and lower bearing. (See procedure (b) and (c) above)

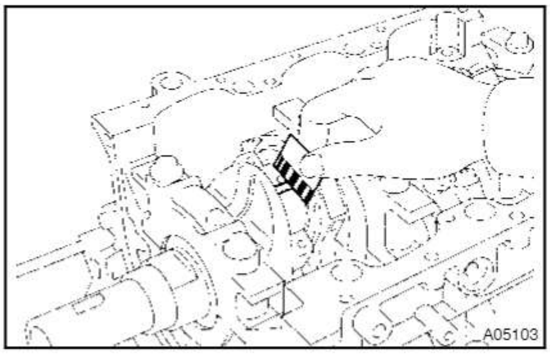

(i) Measure the Plastigage at its widest point.

Standard oil clearance:

0.027 – 0.053 mm (0.0011 – 0.0021 in.)

Maximum oil clearance: 0.065 mm (0.0026 in.)

If the oil clearance is greater than maximum, replace the bearings. If necessary, replace the crankshaft.

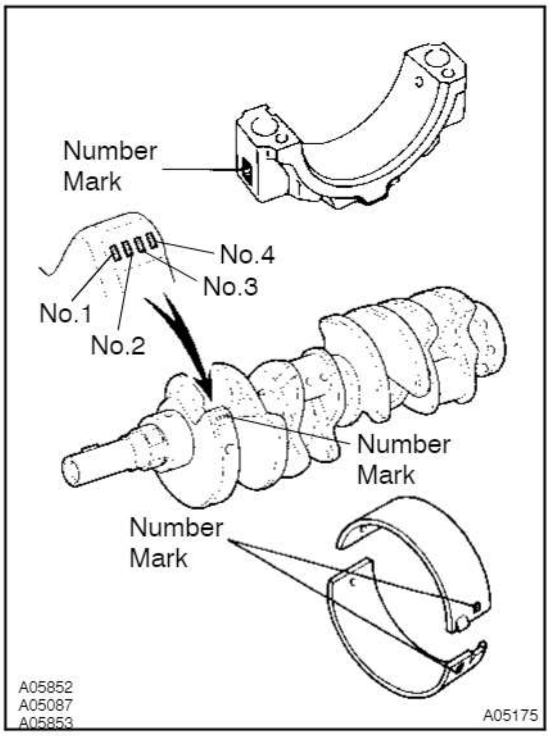

HINT:

If using a standard bearing, replace it with one having the same number. If the number of the bearing cannot be determined, select the correct bearing by adding together the numbers imprinted on the connecting rod cap and crankshaft, then selecting the bearing with the same number as the total. There are 6 sizes of standard bearings, marked "2", "3", "4", "5", "6" and "7".

	Number mark											
Connecting rod cap	1	1	2	1	2	3	2	3	4	3	4	4
Crankshaft	1	2	1	3	2	1	3	2	1	3	2	3
Use bearing	2	3		4			5			6		7

EXAMPLE:

Connecting rod cap "3" + Crankshaft "1"
= Total number 4 (Use bearing "4")

Reference

Connecting rod big end inside diameter:

Mark "1"	55.000 – 55.006 mm (2.1654 – 2.1656 in.)
Mark "2"	55.006 – 55.012 mm (2.1656 – 2.1658 in.)
Mark "3"	55.012 – 55.018 mm (2.1658 – 2.1661 in.)
Mark "4"	55.018 – 55.024 mm (2.1661 – 2.1663 in.)

Crankshaft crank pin diameter:

Mark "1"	51.994 – 52.000 mm (2.0470 – 2.0472 in.)
Mark "2"	51.988 – 51.994 mm (2.0468 – 2.0470 in.)
Mark "3"	51.982 – 51.988 mm (2.0465 – 2.0468 in.)

Standard sized bearing center wall thickness:

Mark "2"	1.484 – 1.487 mm (0.0584 – 0.0585 in.)
Mark "3"	1.487 – 1.490 mm (0.0585 – 0.0587 in.)
Mark "4"	1.490 – 1.493 mm (0.0587 – 0.0588 in.)
Mark "5"	1.493 – 1.496 mm (0.0588 – 0.0589 in.)
Mark "6"	1.496 – 1.499 mm (0.0589 – 0.0590 in.)
Mark "7"	1.499 – 1.502 mm (0.0590 – 0.0591 in.)

(j) Completely remove the Plastigage.

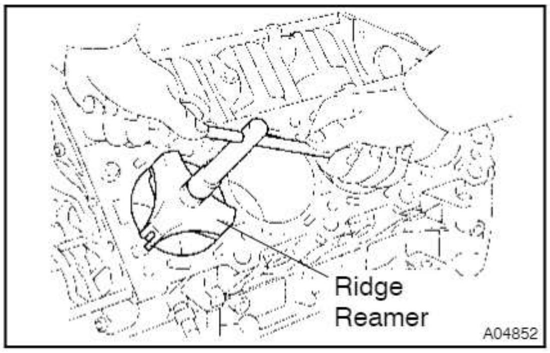

23. REMOVE PISTON AND CONNECTING ROD ASSEMBLIES

(a) Using a ridge reamer, remove all the carbon from the top of the cylinder.

(b) Push the piston, connecting rod assembly and upper bearing through the top of the cylinder block.

HINT:

- Keep the bearings, connecting rod and cap together.
- Arrange the piston and connecting rod assemblies in correct order.

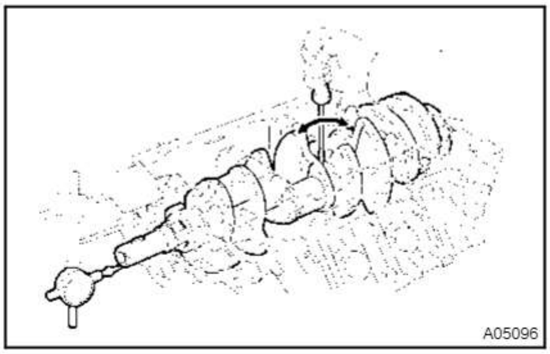

24. CHECK CRANKSHAFT THRUST CLEARANCE

Using a dial indicator, measure the thrust clearance while prying the crankshaft back and forth with a screwdriver.

Standard thrust clearance:
0.020 – 0.220 mm (0.0008 – 0.0087 in.)
Maximum thrust clearance: 0.30 mm (0.0118 in.)

If the thrust clearance is greater than maximum, replace the thrust washers as a set.

Thrust washer thickness:
2.440 – 2.490 mm (0.0961 – 0.0980 in.)

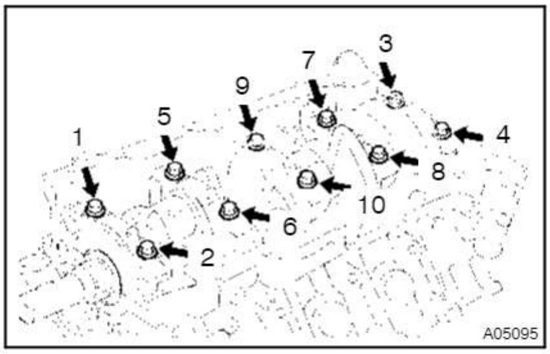

25. REMOVE MAIN BEARING CAPS AND CHECK OIL CLEARANCE

(a) Uniformly loosen and remove the 10 main bearing cap bolts in several passes, in the sequence shown.

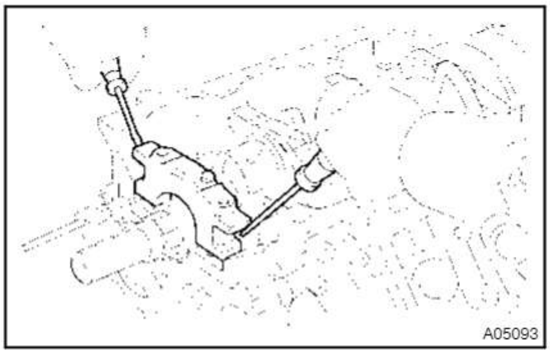

(b) Using 2 screwdrivers, pry out the main bearing cap, and remove the 5 main bearing caps, 5 lower bearings and 2 lower thrust washers (No.3 main bearing cap only).

NOTICE:

Be careful not to damage the cylinder block.

HINT:

- Keep the lower bearing and main bearing cap together.
- Arrange the main bearing caps and lower thrust washers in correct order.

(c) Lift out the crankshaft.

HINT:

Keep the upper bearings and upper thrust washers together with the cylinder block.

(d) Clean each main journal and bearing.

(e) Check each main journal and bearing for pitting and scratches.

If the journal or bearing is damaged, replace the bearings. If necessary, replace the crankshaft.

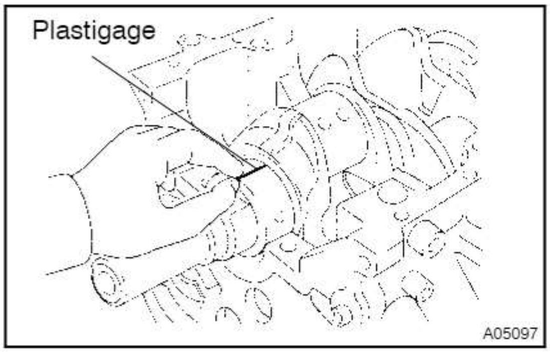

(f) Place the crankshaft on the cylinder block.

(g) Lay a strip of Plastigage across each journal.

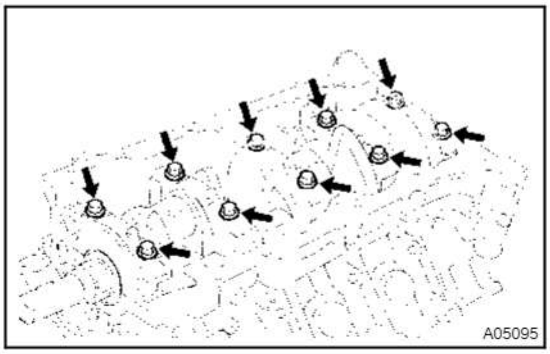

(h) Install the main bearing caps.
(See page EM–89)

NOTICE:
Do not turn the crankshaft.

(i) Remove the main bearing caps.
(See procedure (a) and (b) above)

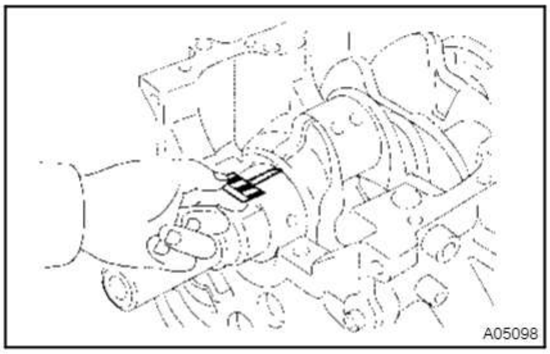

(j) Measure the Plastigage at its widest point.
Standard clearance:
0.040 – 0.058 mm (0.0016 – 0.0023 in.)
Maximum clearance: 0.070 mm (0.0028 in.)

If the oil clearance is greater than maximum, replace the bearings. If necessary, replace the crankshaft.

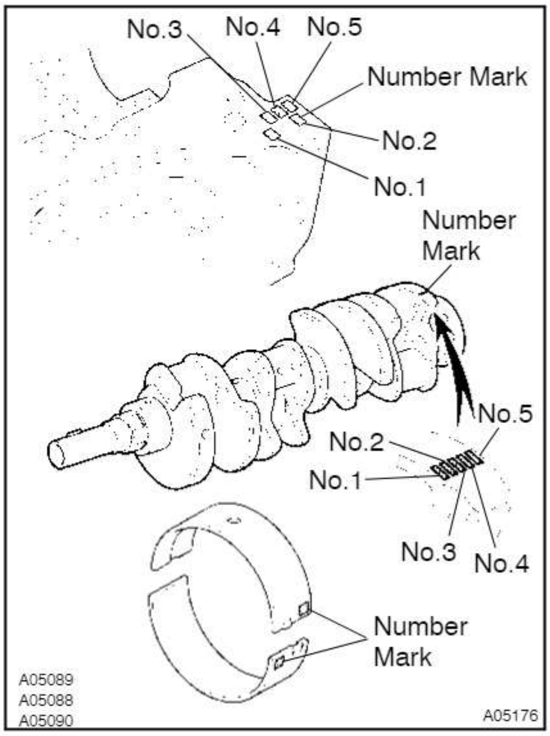

HINT:

If using a standard bearing, replace it with one having the same number. If the number of the bearing cannot be determined, select the correct bearing by adding together the numbers imprinted on the cylinder block and crankshaft, then refer to the table below for the appropriate bearing number. There are 5 sizes of the standard bearings. For No.1 and No.5 position bearings, use bearings marked "3", "4", "5", "6" and "7". For others position bearings, use bearings marked "1", "2", "3", "4" and "5".

No.1, No.5:

		Use bearing
Cylinder block (A) + Crankshaft (B)	0 – 5	3
	6 – 11	4
	12 – 17	5
	18 – 23	6
	24 – 28	7

EXAMPLE:
Cylinder block "08" + Crankshaft "06"
= Total number 14 (Use bearing "5")

Others:

		Use bearing
Cylinder block (A) + Crankshaft (B)	0 – 5	1
	6 – 11	2
	12 – 17	3
	18 – 23	4
	24 – 28	5

EXAMPLE:
Cylinder block "08" + Crankshaft "06"
= Total number 14 (Use bearing "3")

Reference

Cylinder block main journal bore diameter (A):

Mark ”00”	72.000 mm (2.8346 in.)
Mark ”01”	72.001 mm (2.8347 in.)
Mark ”02”	72.002 mm (2.8347 in.)
Mark ”03”	72.003 mm (2.8348 in.)
Mark ”04”	72.004 mm (2.8348 in.)
Mark ”05”	72.005 mm (2.8348 in.)
Mark ”06”	72.006 mm (2.8349 in.)
Mark ”07”	72.007 mm (2.8349 in.)
Mark ”08”	72.008 mm (2.8350 in.)
Mark ”09”	72.009 mm (2.8350 in.)
Mark ”10”	72.010 mm (2.8350 in.)
Mark ”11”	72.011 mm (2.8351 in.)
Mark ”12”	72.012 mm (2.8351 in.)
Mark ”13”	72.013 mm (2.8352 in.)
Mark ”14”	72.014 mm (2.8352 in.)
Mark ”15”	72.015 mm (2.8352 in.)
Mark ”16”	72.016 mm (2.8353 in.)

Crankshaft main journal diameter (B):

Mark ”00”	67.000 mm (2.6378 in.)
Mark ”01”	66.999 mm (2.6378 in.)
Mark ”02”	66.998 mm (2.6377 in.)
Mark ”03”	66.997 mm (2.6377 in.)
Mark ”04”	66.996 mm (2.6376 in.)
Mark ”05”	66.995 mm (2.6376 in.)
Mark ”06”	66.994 mm (2.6376 in.)
Mark ”07”	66.993 mm (2.6375 in.)
Mark ”08”	66.992 mm (2.6375 in.)
Mark ”09”	66.991 mm (2.6374 in.)
Mark ”10”	66.990 mm (2.6374 in.)
Mark ”11”	66.989 mm (2.6374 in.)
Mark ”12”	66.988 mm (2.6373 in.)

Standard bearing center wall thickness:
No.1 and No.5

Mark ”3”	2.481 – 2.484 mm (0.0977 – 0.0978 in.)
Mark ”4”	2.484 – 2.487 mm (0.0978 – 0.0979 in.)
Mark ”5”	2.487 – 2.490 mm (0.0979 – 0.0980 in.)
Mark ”6”	2.490 – 2.493 mm (0.0980 – 0.0981 in.)
Mark ”7”	2.493 – 2.496 mm (0.0981 – 0.0983 in.)

Others:

Mark ”1”	2.481 – 2.484 mm (0.0977 – 0.0978 in.)
Mark ”2”	2.484 – 2.487 mm (0.0978 – 0.0979 in.)
Mark ”3”	2.487 – 2.490 mm (0.0979 – 0.0980 in.)

Mark "4"	2.490 – 2.493 mm (0.0980 – 0.0981 in.)
Mark "5"	2.493 – 2.496 mm (0.0981 – 0.0983 in.)

(k) Completely remove the Plastigage.

26. REMOVE CRANKSHAFT

(a) Lift up the crankshaft.

(b) Remove the 5 upper main bearings and 2 upper thrust washers from the cylinder block.

HINT:

Arrange the main bearing caps, bearings and thrust washers in correct order.

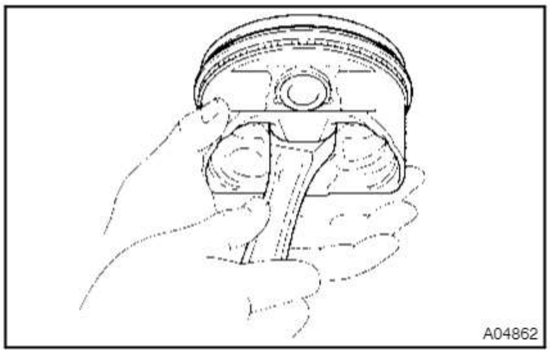

27. CHECK FIT BETWEEN PISTON AND PISTON PIN

Try to move the piston back and forth on the piston pin.
If any movement is felt, replace the piston and pin as a set.

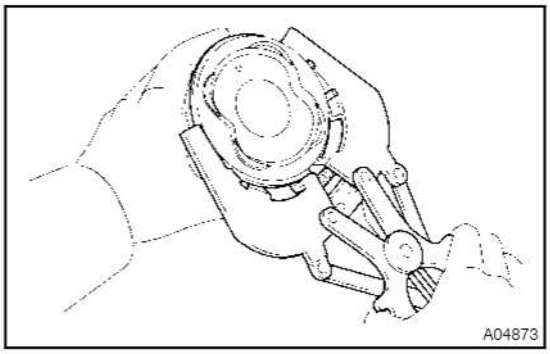

28. REMOVE PISTON RINGS

(a) Using a piston ring expander, remove the 2 compression rings.

(b) Remove the 2 side rails and oil ring by hand.

HINT:

Arrange the piston rings in correct order only.

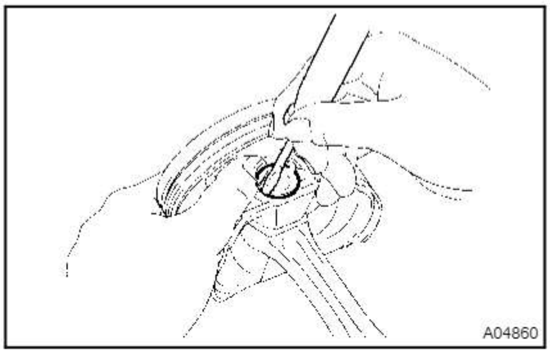

29. DISCONNECT CONNECTING ROD FROM PISTON

(a) Using a small screwdriver, pry out the 2 snap rings.

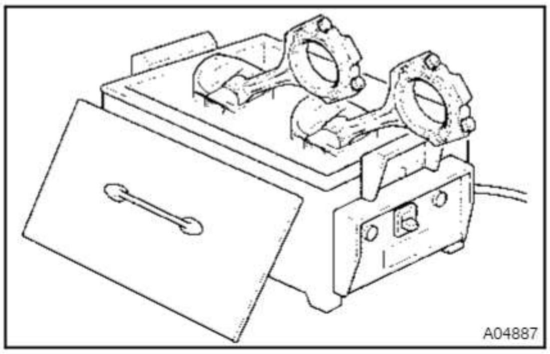

(b) Gradually heat the piston to approx. 60°C (140°F).

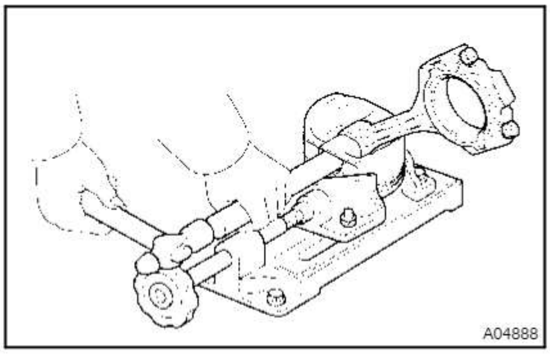

(c) Using a plastic–faced hammer and brass bar, lightly tap out the piston pin and pin and remove the connecting rod.

HINT:

- The piston and pin are a matched set.
- Arrange the pistons, pins, rings, connecting rods and bearings in correct order.

EM0EB–05

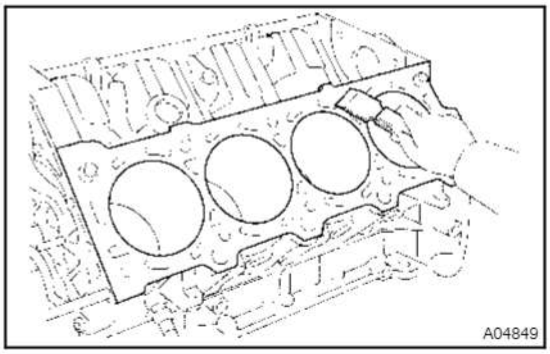

INSPECTION

1. CLEAN CYLINDER BLOCK

(a) Using a gasket scraper, remove all the gasket material from the top surface of the cylinder block.

(b) Using a soft brush and solvent, thoroughly clean the cylinder block.

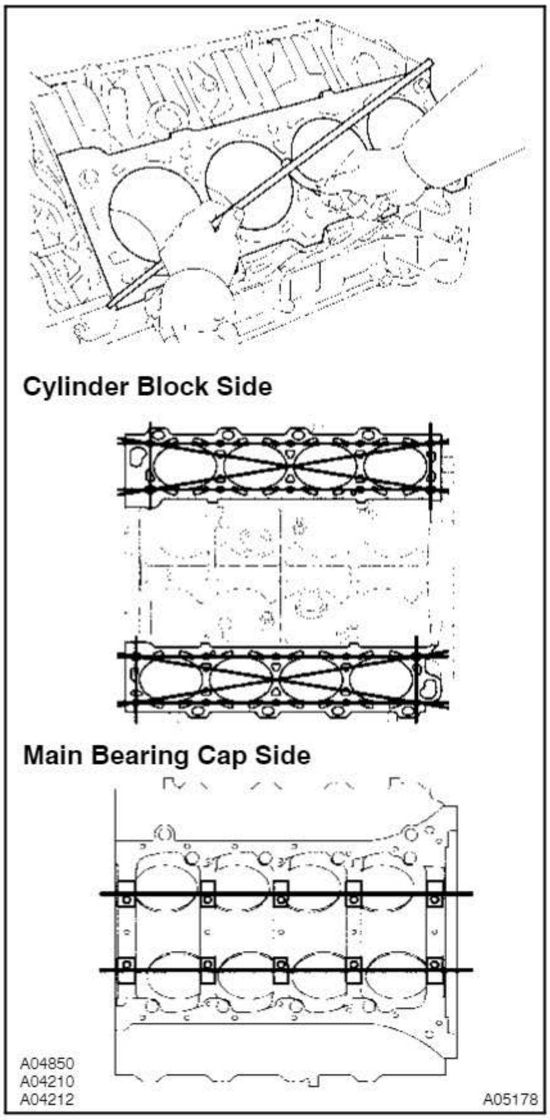

2. INSPECT CYLINDER BLOCK

(a) Inspect for flatness.

Using a precision straight edge and feeler gauge, measure the surfaces contacting the cylinder head and main bearing cap for warpage.

Maximum warpage: 0.07 mm (0.0028 in.)

If warpage is greater than maximum, replace the cylinder block.

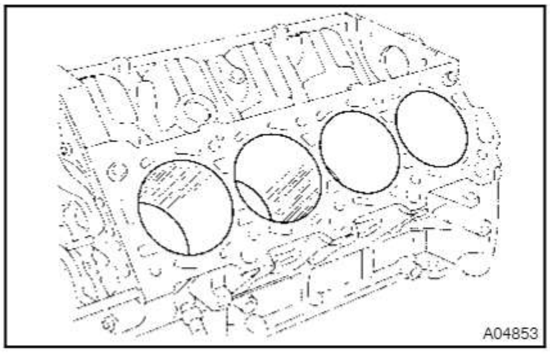

(b) Visually check the cylinder for vertical scratches.

If deep scratches are present, rebore all the 8 cylinders and replace all the 8 pistons. (See page EM–86) If necessary, replace the cylinder block.

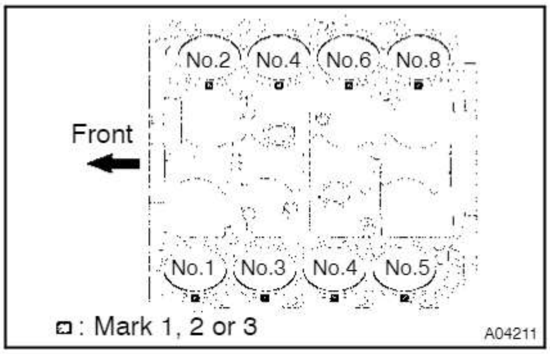

(c) Inspect the cylinder bore diameter.

HINT:

There are 3 sizes of the standard cylinder bore diameter, marked "1", "2" and "3" accordingly. The mark is stamped on the top of the cylinder block.

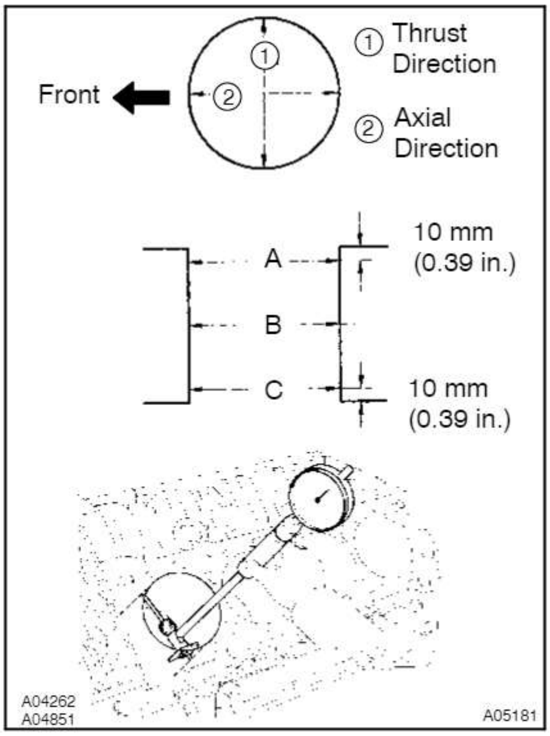

Using a cylinder gauge, measure the cylinder bore diameter at positions A, B and C in the thrust and axial directions.

Standard diameter:

STD	Mark "1"	94.002 – 94.010 mm (3.7009 – 3.7012 in.)
	Mark "2"	94.010 – 94.023 mm (3.7012 – 3.7017 in.)
	Mark "3"	94.023 – 94.031 mm (3.7017 – 3.7020 in.)

Maximum diameter: 94.23 mm (3.7098 in.)

STD	94.231 mm (3.7099 in.)
O/S 0.50	94.731 mm (3.7296 in.)

If the diameter is greater than maximum, rebore all the 8 cylinders and replace all the 8 pistons. (See page EM–86) If necessary, replace the cylinder block.

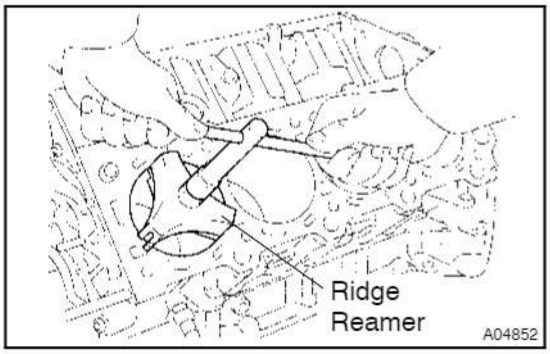

(d) Remove the cylinder ridge.

If the wear is less than 0.2 mm (0.008 in.), using a ridge reamer, grind the top of the cylinder.

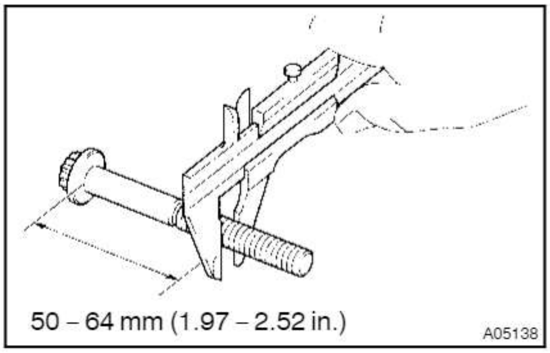

(e) Using vernier calipers, measure the thread outside diameter of the main bearing cap bolt.

Standard diameter:

10.760 – 10.970 mm (0.4236 – 0.4319 in.)

Minimum diameter: 10.40 mm (0.4094 in.)

If the diameter is less than minimum, replace the cap bolt.

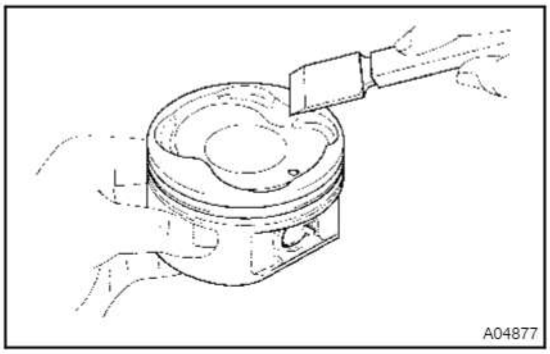

3. CLEAN PISTON

(a) Using a gasket scraper, remove the carbon from the piston top.

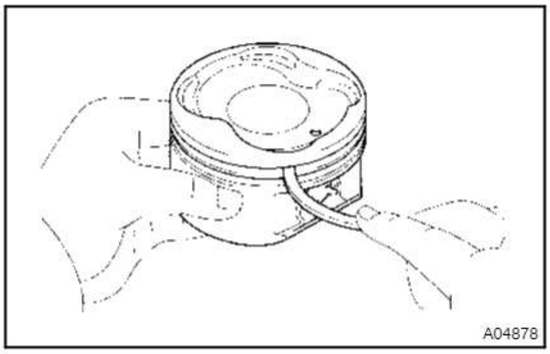

(b) Using a groove cleaning tool or broken ring, clean the piston ring grooves.

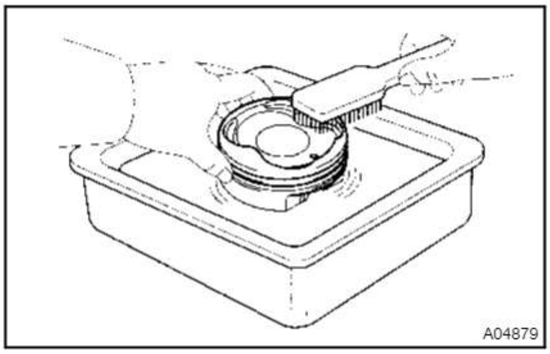

(c) Using solvent and a brush, thoroughly clean the piston.

NOTICE:

Do not use a wire brush.

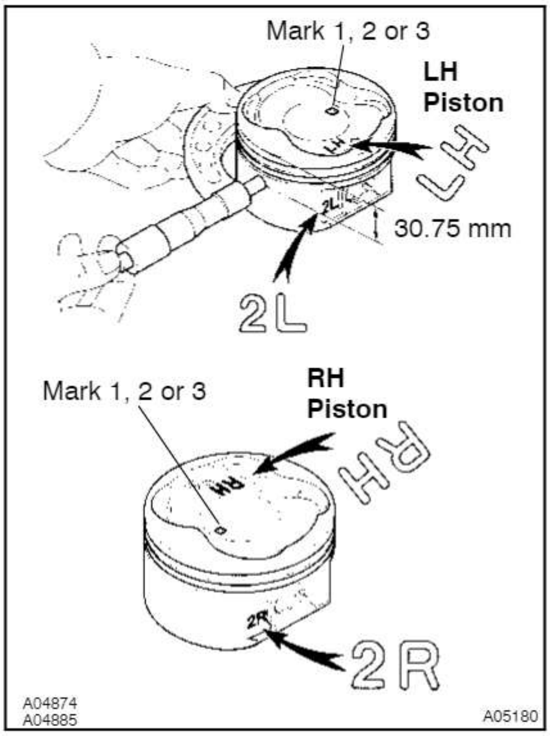

4. INSPECT PISTON AND CONNECTING ROD

(a) Inspect the piston oil clearance.

HINT:

There are 3 sizes of the standard piston diameter, marked "1", "2" and "3" accordingly. The mark is stamped on the piston top.

(1) Using a micrometer, measure the piston diameter at right angles to the piston pin center line, 30.75 mm (1.2106 in.) from the piston head.

Piston diameter:

STD	Mark "1"	93.902 – 93.912 mm (3.6969 – 3.6973 in.)
	Mark "2"	93.912 – 93.920 mm (3.6973 – 3.6976 in.)
	Mark "3"	93.920 – 93.930 mm (3.6976 – 3.6980 in.)
O/S 0.50		94.402 – 94.430 mm (3.7166 – 3.7177 in.)

(2) Measure the cylinder bore diameter in the thrust directions. (See step 2 above)

(3) Subtract the piston diameter measurement from the cylinder bore diameter measurement.

Standard oil clearance:
0.090 – 0.111 mm (0.0035 – 0.0044 in.)
Maximum oil clearance: 0.13 mm (0.0051 in.)

If the oil clearance is greater than maximum, replace all the 8 pistons and rebore all the 8 cylinders. (See page EM–86) If necessary, replace the cylinder block.

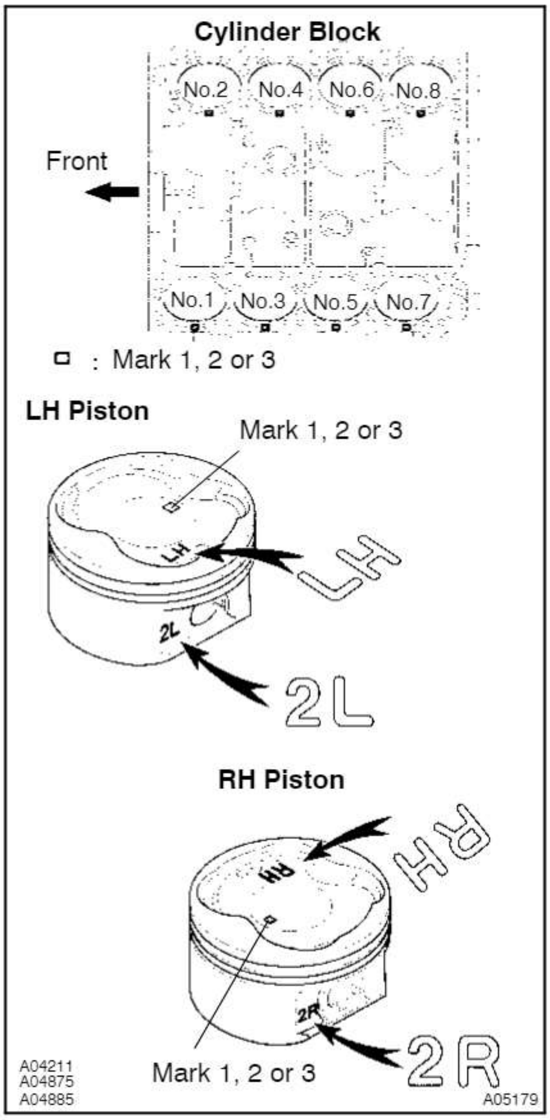

HINT

Use new cylinder block:

- Use a piston with the same number mark as the cylinder diameter marked on the cylinder block.
- The shape of the piston varies for the LH and RH banks. The LH piston is marked with "LH" and "2L", the RH piston with "RH" and "2R".

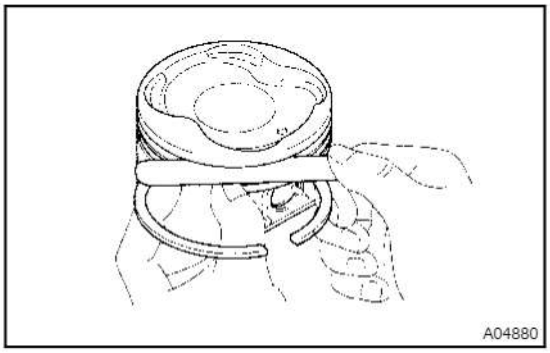

(b) Inspect the piston ring groove clearance.
Using a feeler gauge, measure the clearance between new piston ring and the wall of the ring groove.

Ring groove clearance:

No.1	0.030 – 0.080 mm (0.0012 – 0.0031 in.)
No.2	0.030 – 0.070 mm (0.0012 – 0.0028 in.)

If the clearance is not as specified, replace the piston.

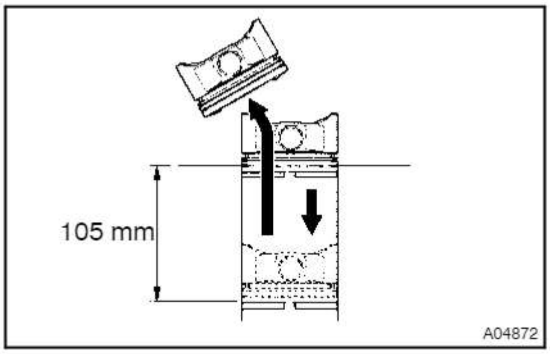

(c) Inspect the piston ring end gap.

(1) Insert the piston ring into the cylinder bore.

(2) Using a piston, push the piston ring a little beyond the bottom of the ring travel, 105 mm (4.13 in.) from the top of the cylinder block.

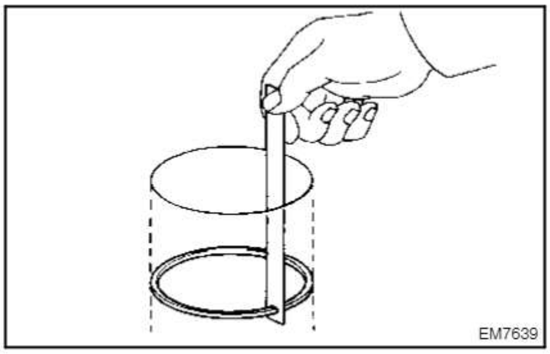

(3) Using a feeler gauge, measure the end gap.

Standard end gap:

No.1	0.300 – 0.500 mm (0.0118 – 0.0197 in.)
No.2	0.400 – 0.650 mm (0.0157 – 0.0256 in.)
Oil (Side rail)	0.130 – 0.480 mm (0.0051 – 0.0189 in.)

Maximum end gap:

No.1	1.10 mm (0.0433 in.)
No.2	1.20 mm (0.0472 in.)
Oil (Side rail)	1.15 mm (0.0453 in.)

If the end gap is greater than maximum, replace the piston ring. If the end gap is greater than maximum, even with a new piston ring, rebore all the 8 cylinders (See page EM–86) or replace the cylinder block.

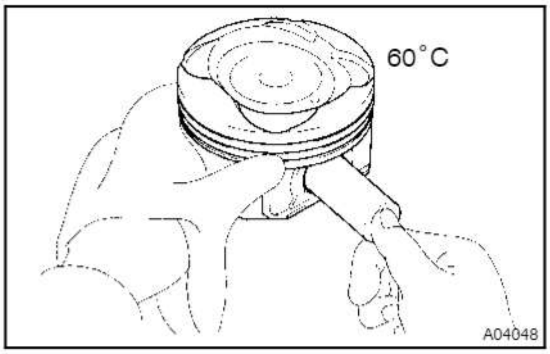

(d) Inspect the piston pin fit.

At 60°C (140°F), you should be able to push the piston pin into the piston pin hole with your thumb.

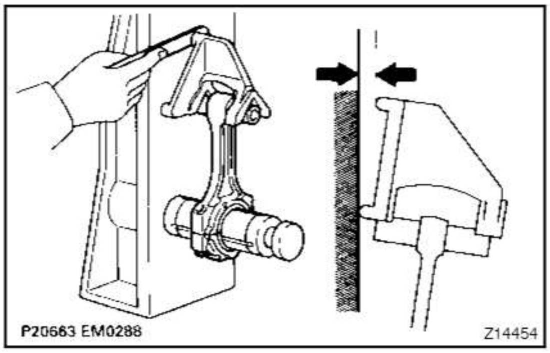

(e) Using a rod aligner and feeler gauge, check the connecting rod alignment.

(1) Check for bend.

Maximum bend:

0.05 mm (0.0020 in.) per 100 mm (3.94 in.)

If bend is greater than maximum, replace the connecting rod assembly.

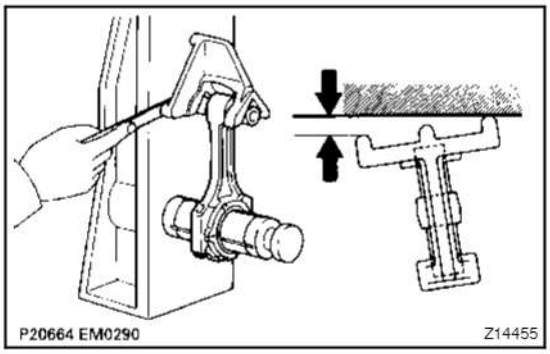

(2) Check for twist

Maximum twist:

0.15 mm (0.0059 in.) per 100 mm (3.94 in.)

If twist is greater than maximum, replace the connecting rod assembly.

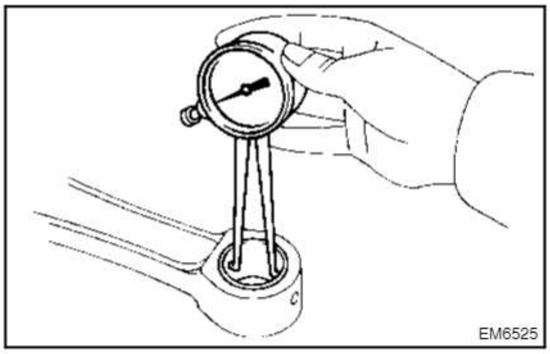

(f) Inspect the piston pin oil clearance.

(1) Using a caliper gauge, measure the inside diameter of the connecting rod bushing.

Bushing inside diameter:

22.005 – 22.014 mm (0.8663 – 0.8667 in.)

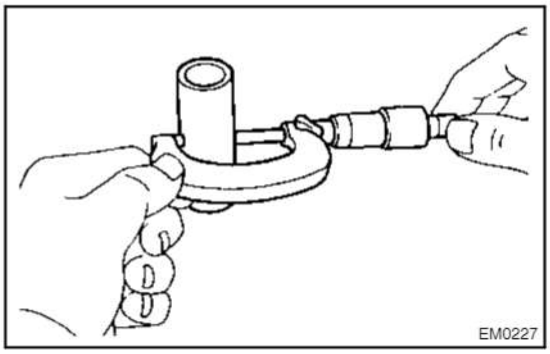

(2) Using a micrometer, measure the piston pin diameter.

Piston pin diameter:

21.997 – 22.006 mm (0.8660 – 0.8664 in.)

(3) Subtract the piston pin diameter measurement from the bushing inside diameter measurement.

Standard oil clearance:

0.005 – 0.011 mm (0.0002 – 0.0004 in.)

Maximum oil clearance: 0.05 mm (0.0020 in.)

If the oil clearance is greater than maximum, replace the bushing. (See page EM–86) If necessary, replace the piston and piston pin as a set.

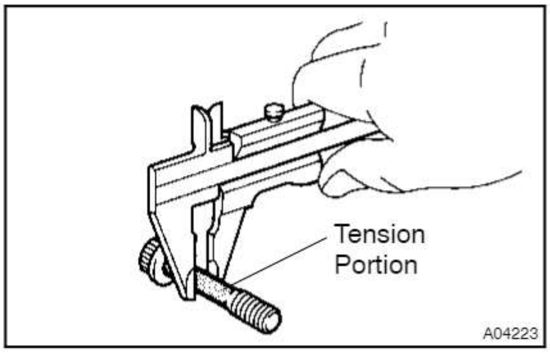

(g) Using vernier calipers, measure the tension portion of the connecting rod bolt.

Standard diameter:

7.200 – 7.300 mm (0.2835 – 0.2874 in.)

Minimum diameter: 7.00 mm (0.2756 in.)

If the diameter is less than minimum, replace the bolt.

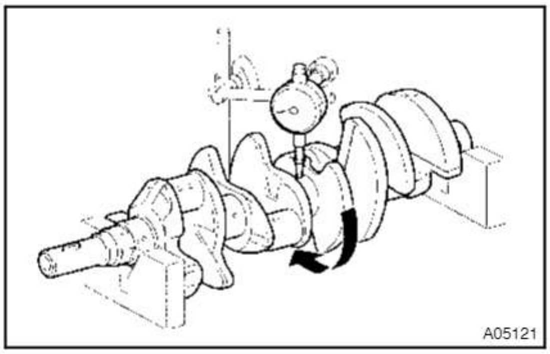

5. INSPECT CRANKSHAFT

(a) Inspect for circle runout.

(1) Place the crankshaft on V–blocks.

(2) Using a dial indicator, measure the circle runout at the center journal.

Maximum circle runout: 0.08 mm (0.0031 in.)

If the circle runout is greater than maximum, replace the crankshaft.

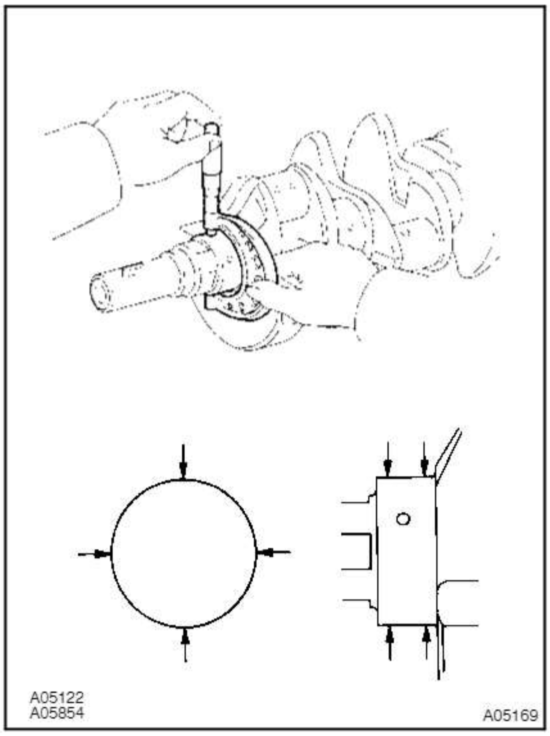

(b) Inspect the main journals and crank pins.

(1) Using a micrometer, measure the diameter of each main journal and crank pin.

Main journal diameter:
66.988 – 67.000 mm (2.6373 – 2.6378 in.)
Crank pin diameter:
51.982 – 52.000 mm (2.0465 – 2.0472 in.)

If the diameter is not as specified, check the oil clearance (See page EM–70). If necessary, replace the crankshaft.

(2) Check each main journal and crank pin for taper and out–of–round as shown.

Maximum taper and out–of–round:
0.02 mm (0.0008 in.)

If the taper and out–of–round is greater than maximum, replace the crankshaft.

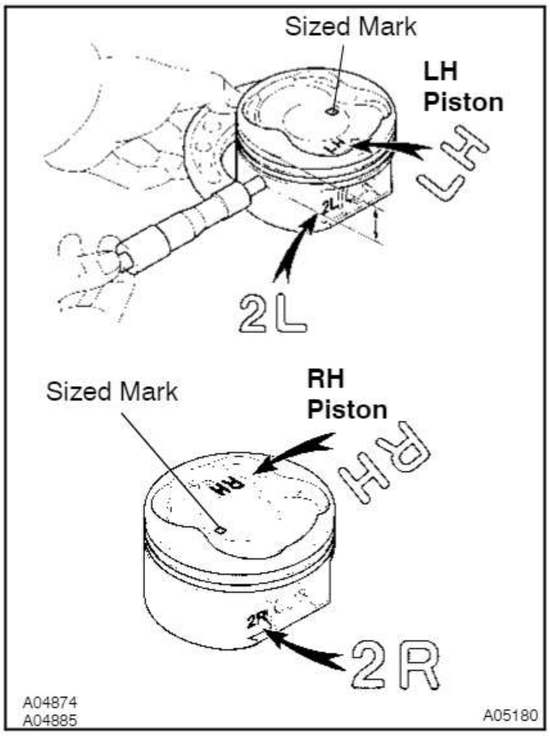

EM0L7–04

REPLACEMENT

1. REPLACE OVERSIZED (O/S) PISTONS FOR CYLINDER BORING

HINT:

- Bore all the 8 cylinders to the oversized piston outside diameter.
- Replace all the piston rings with ones to match the oversized pistons.

(a) Keep 8 new O/S pistons.
O/S 0.50 piston diameter:
94.402 – 94.430 mm (3.7166 – 3.7177 in.)

HINT:

The shape of the piston varies for the LH and RH banks. The LH piston is marked with "LH" and "2L", the RH piston with "RH" and "2R".

(b) Using a micrometer, measure the piston diameter at right angles to the piston pin center line, 30.75 mm (1.2106 in.) from the piston head.

(c) Calculate the amount each cylinder is to be rebored as follows:
Size to be rebored = P + C – H
P = Piston diameter
C = Piston clearance:
0.090 – 0.111 mm (0.0035 – 0.0044 in.)
H = Allowance for honing: 0.02 mm (0.0008 in.) or less

(d) Bore and hone the cylinders to calculated dimensions.
Maximum honing: 0.02 mm (0.0008 in.)

NOTICE:

Excess honing will destroy the finished roundness.

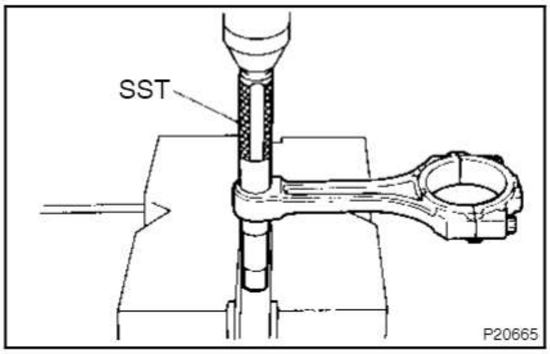

2. REPLACE CONNECTING ROD BUSHINGS

(a) Using SST and a press, press out the bushing.
SST 09222–30010

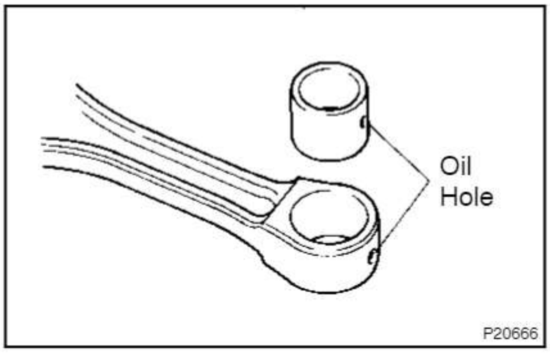

(b) Align the oil holes of a new bushing and the connecting rod.

(c) Using SST and a press, press in the bushing.
SST 09222–30010

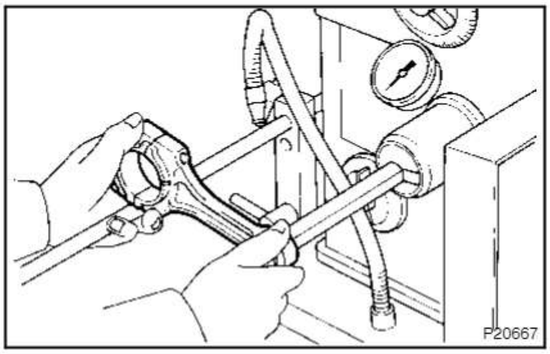

(d) Using a pin hole grinder, hone the bushing to obtain the standard specified clearance (See page EM–79) between the bushing and piston pin.

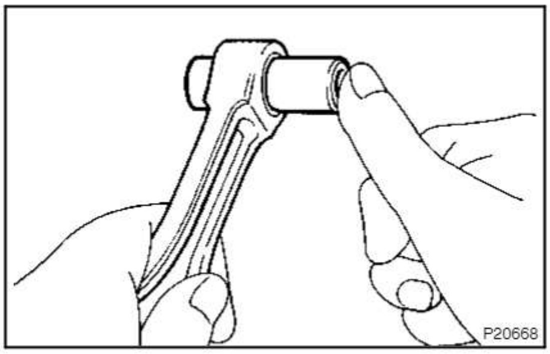

(e) Check the piston pin fit at normal room temperature. Coat the piston pin with engine oil, and push it into the connecting rod with your thumb.

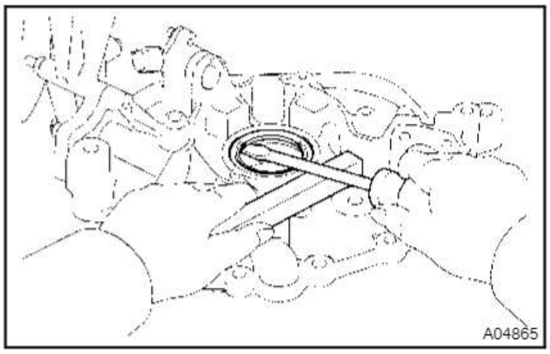

3. REPLACE CRANKSHAFT FRONT OIL SEAL

HINT:

There are 2 methods ((a) and (b)) to replace the oil seal.

(a) If the oil pump is removed from the cylinder block:

(1) Using a screwdriver, pry out the oil seal.

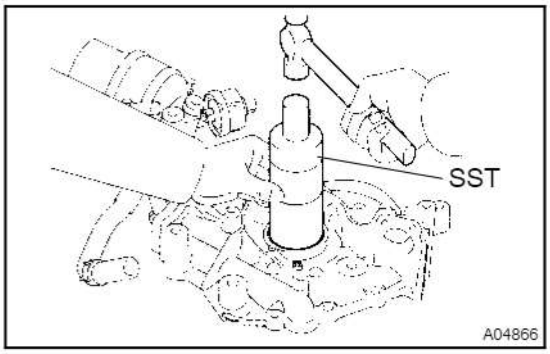

(2) Using SST and a hammer, tap in a new oil seal until its surface is flush with the oil pump body edge.

SST 09316–60011 (09316–00011)

(3) Apply MP grease to the oil seal lip.

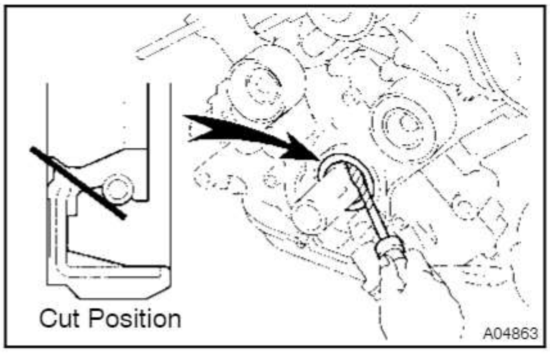

(b) If the oil pump is installed to the cylinder block:

(1) Using a knife, cut off the oil seal lip.

(2) Using a screwdriver, pry out the oil seal.

NOTICE:

Be careful not to damage the crankshaft. Tape the screwdriver tip.

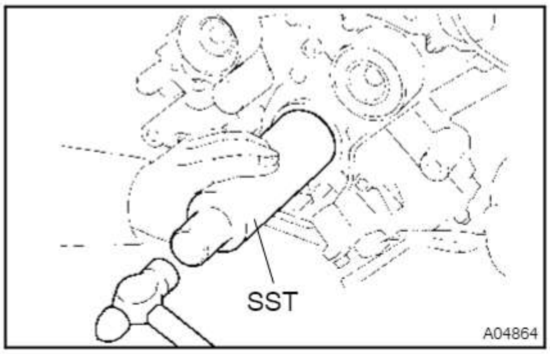

(3) Apply MP grease to a new oil seal lip.
(4) Using SST and a hammer, tap in the oil seal until its surface is flush with the oil pump body edge.
SST 09316–60011 (09316–00011)

4. REPLACE CRANKSHAFT REAR OIL SEAL

HINT:

There are 2 methods ((a) and (b)) to replace the oil seal.

(a) If the rear oil seal retainer is removed from the cylinder block:
  (1) Using a screwdriver and hammer, tap out the oil seal.

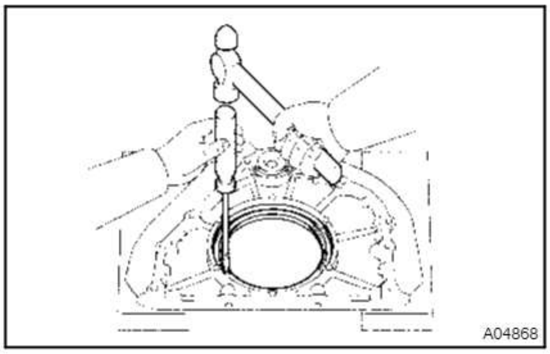

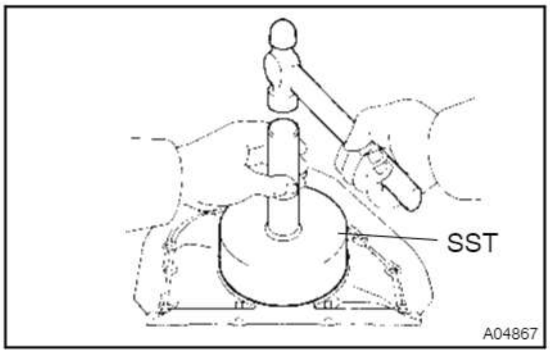

  (2) Using SST and a hammer, tap in a new oil seal until its surface is flush with the rear oil seal retainer edge.
SST 09223–56010
  (3) Apply MP grease to the oil seal lip.

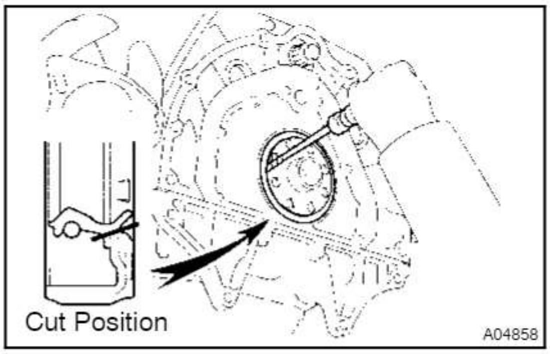

(b) If the rear oil seal retainer is installed to the cylinder block:
  (1) Using a knife, cut off the oil seal lip.
  (2) Using a screwdriver, pry out the oil seal.

NOTICE:

Be careful not to damage the crankshaft. Tape the screwdriver tip.

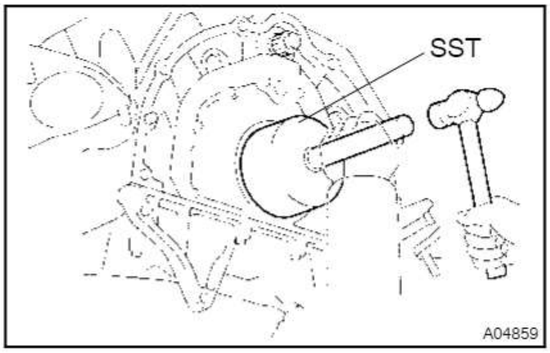

  (3) Apply MP grease to a new oil seal lip.
  (4) Using SST and a hammer, tap in the oil seal until its surface is flush with the rear oil seal retainer edge.
SST 09223–56010

EM0T1–01

REASSEMBLY

HINT:

- Thoroughly clean all parts to be assembled.
- Before installing the parts, apply new engine oil to all sliding and rotating surfaces.
- Replace all gaskets, O–rings and oil seals with new parts.

1. ASSEMBLE PISTON AND CONNECTING ROD

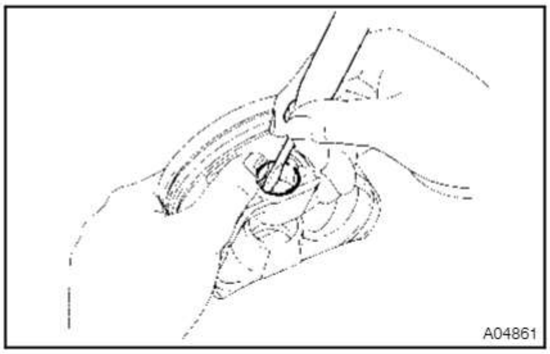

(a) Using a small screwdriver, install a new snap ring on one side of the piston pin hole.

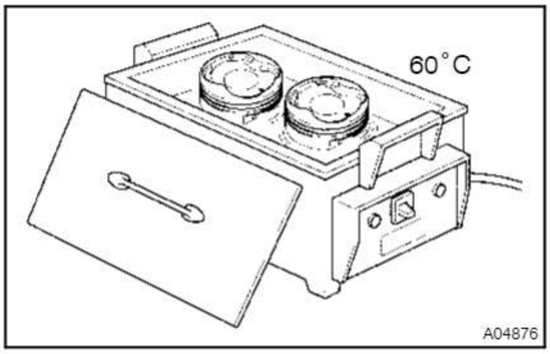

(b) Gradually heat the piston to about 60°C (140°F).

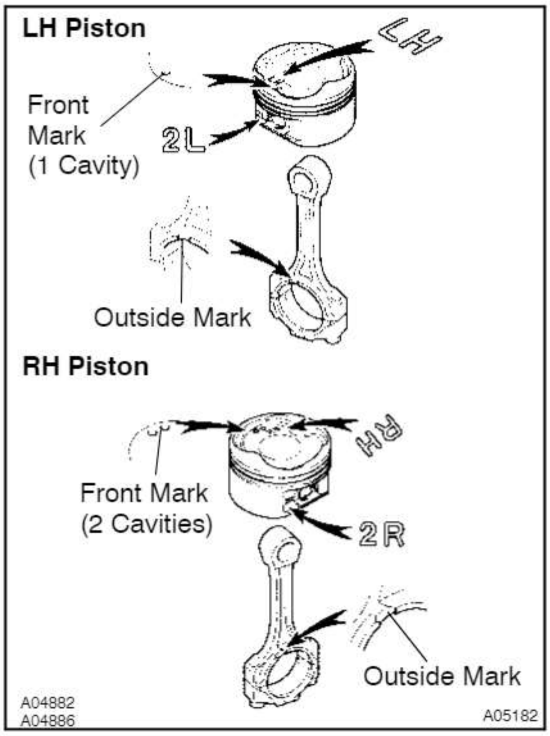

(c) Coat the piston pin with engine oil.

(d) Position the piston front mark with respect to the outside mark on the connecting rod as shown in the diagram.

NOTICE:

The installation directions of the piston and connecting rod are different for the LH and RH banks. The LH piston is marked with "LH" and "2L", the RH piston with "RH" and "2R".

(e) Align the piston pin holes of the piston and connecting rod, and push in the piston pin with your thumb.

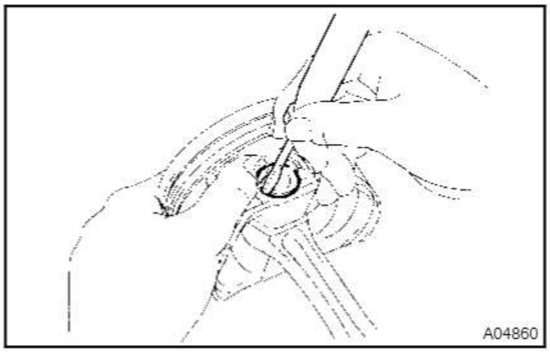

(f) Using a small screwdriver, install a new snap ring on the other side of the piston pin hole.

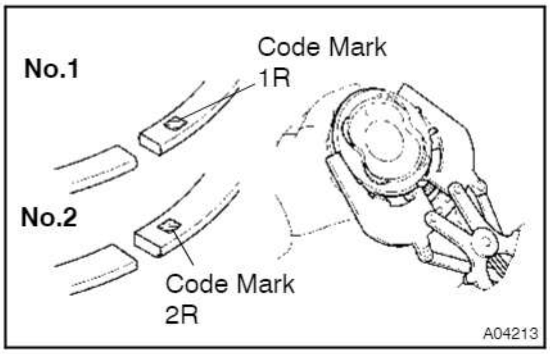

2. INSTALL PISTON RINGS

(a) Install the oil ring expander and 2 side rails by hand.

(b) Using a piston ring expander, install the 2 compression rings with the code mark facing upward.

Code mark:

No.1	1R
No.2	2R

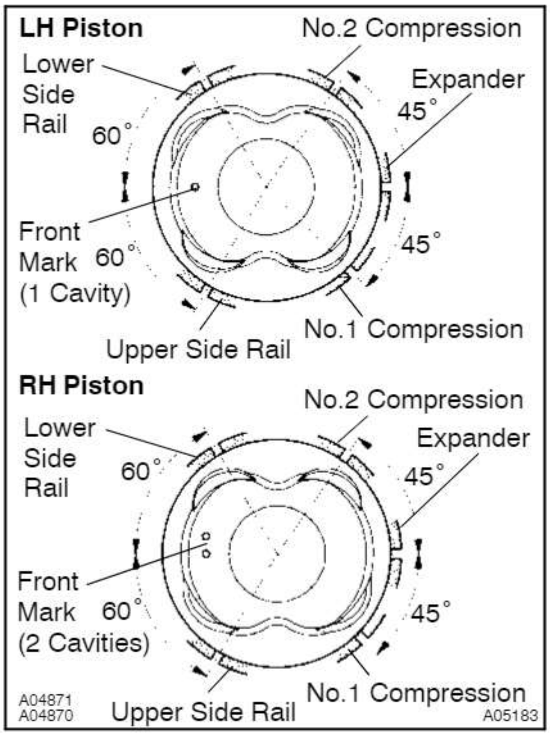

(c) Position the piston rings so that the ring ends are as shown.

NOTICE:

Do not align the ring ends.

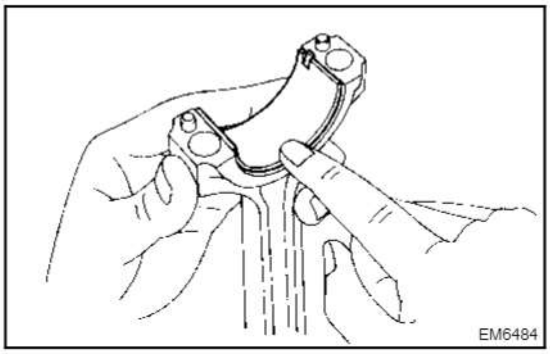

3. INSTALL BEARINGS

(a) Align the bearing claw with the groove of the connecting rod or connecting cap.

(b) Install the bearings in the connecting rod and connecting rod cap.

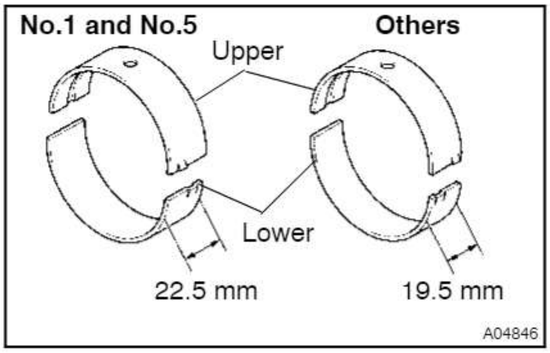

4. INSTALL MAIN BEARINGS

HINT:

- Main bearings come in widths of 19.5 mm (0.768 in.) and 22.5 mm (0.886 in.). Install the 22.5 mm (0.886 in.) bearings in the No.1 and No.5 cylinder block journal positions with the main bearing cap. Install the 19.5 mm (0.768 in.) bearings in the other positions.
- Upper bearings have an oil groove and oil holes; lower bearings do not.

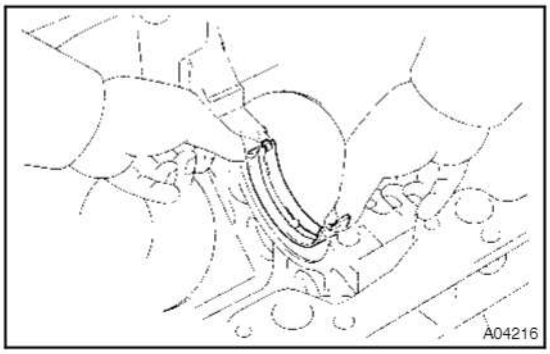

(a) Align the bearing claw with the claw groove of the cylinder block, and push in the 5 upper bearings.

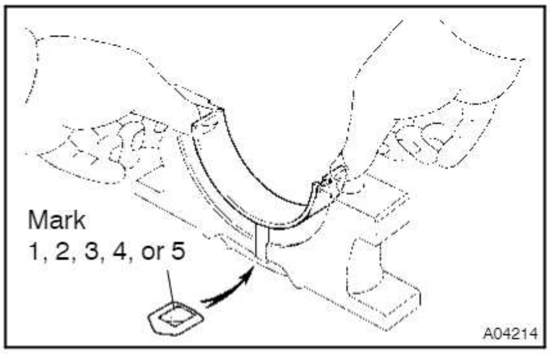

(b) Align the bearing claw with the claw groove of the main bearing cap, and push in the 5 lower bearings.

HINT:

A number is marked on each main bearing cap to indicate the installation position.

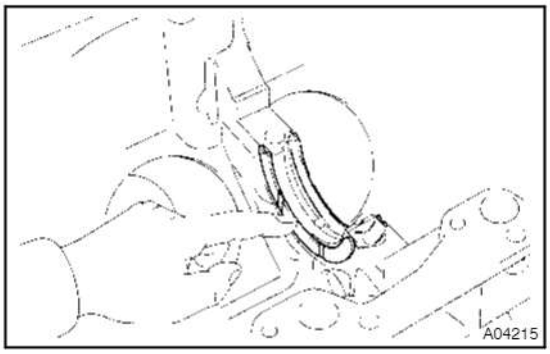

5. INSTALL UPPER THRUST WASHERS

Install the 2 thrust washers under the No.3 journal position of the cylinder block with the oil grooves facing outward.

6. PLACE CRANKSHAFT ON CYLINDER BLOCK

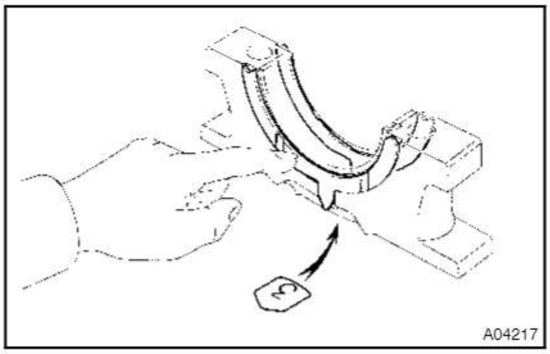

7. PLACE MAIN BEARING CAPS AND LOWER THRUST WASHERS ON CYLINDER BLOCK

(a) Install the 2 thrust washers on the No.3 bearing cap with the grooves facing outward.

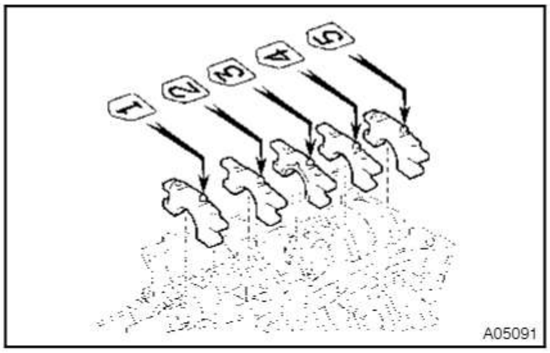

(b) Install the 5 main bearing caps in their proper locations.

8. INSTALL MAIN BEARING CAP BOLTS

HINT:

- The main bearing cap bolts are tightened in 2 progressive steps (steps (b) and (d)).
- If any one of the main bearing cap bolts is broken or deformed, replace it.

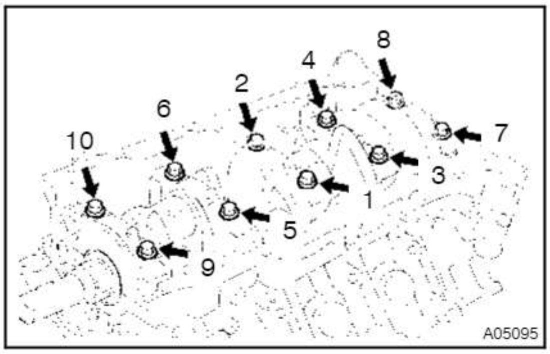

(a) Apply a light coat of engine oil on the threads and under the main bearing cap bolts.

(b) Install and uniformly tighten the 10 main bearing cap bolts in several passes, in the sequence shown.

Torque: 27 N·m (275 kgf·cm, 20 ft·lbf)

If any one of the main bearing cap bolts does not meet the torque specification, replace the main bearing cap bolt.

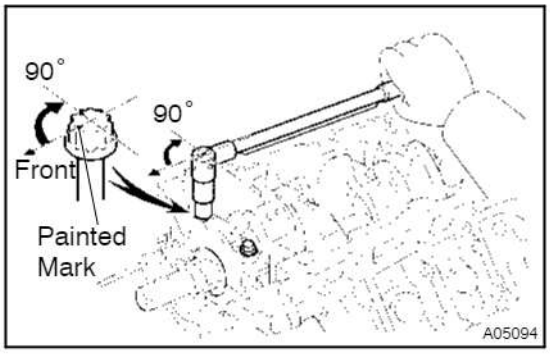

(c) Mark the front of the main bearing cap bolt with paint.

(d) Retighten the main bearing cap bolts by 90° in the numerical order shown.

(e) Check that the painted mark is now at a 90° angle to the front.

(f) Check that the crankshaft turns smoothly.

9. CHECK CRANKSHAFT THRUST CLEARANCE (See page EM–70)

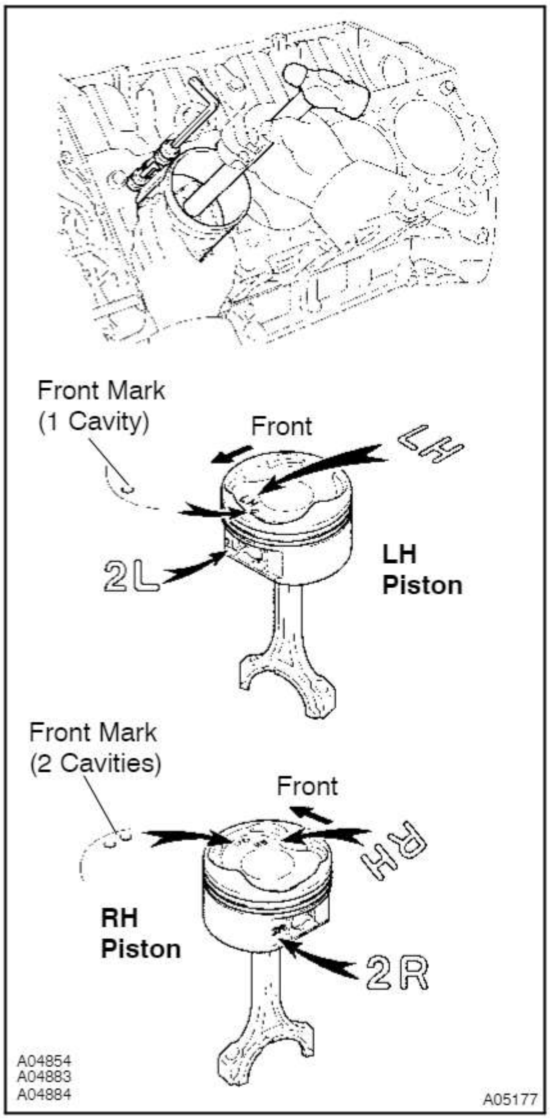

10. INSTALL PISTON AND CONNECTING ROD ASSEMBLES

Using a piston ring compressor, push the correctly numbered piston and connecting rod assemblies into each cylinder with the front mark of the piston facing forward.

NOTICE:

The shape of the piston varies for the LH and RH banks. The LH piston is marked with "LH" and "2R", the RH piston with "RH" and "2R".

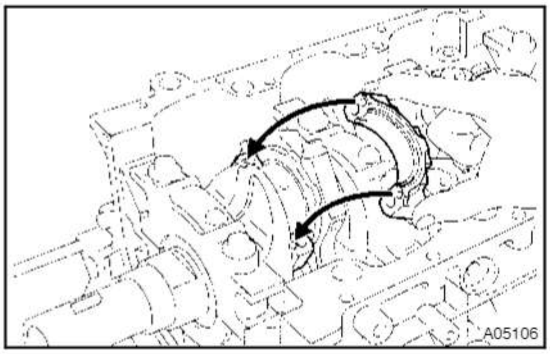

11. PLACE CONNECTING ROD CAP ON CONNECTING ROD

(a) Match the numbered connecting rod cap with the connecting rod.

(b) Align the pin groove of the connecting rod cap with the pins of the connecting rod, and install the connecting rod cap.

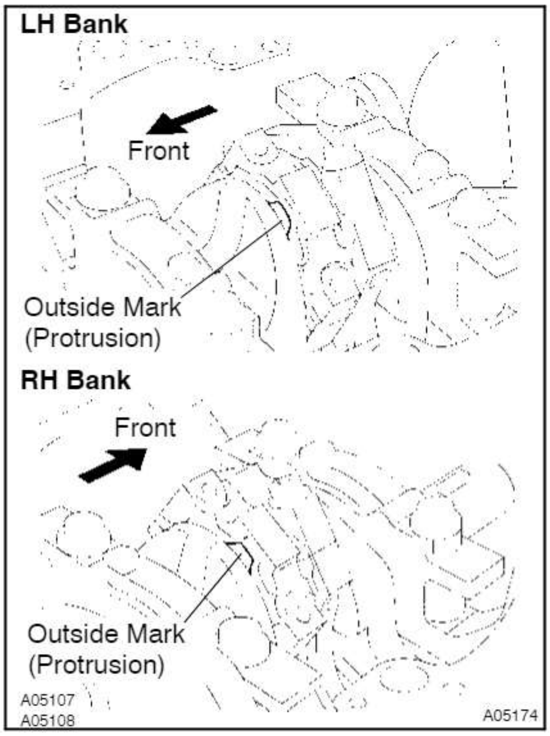

(c) Check that the outside mark of the connecting rod cap is facing in correct direction.

12. INSTALL CONNECTING ROD CAP BOLTS

HINT:

- The connecting rod cap bolts are tightened in 2 progressive steps (steps (b) and (d)).
- If any one of the connecting rod cap bolts is broken or deformed, replace it.

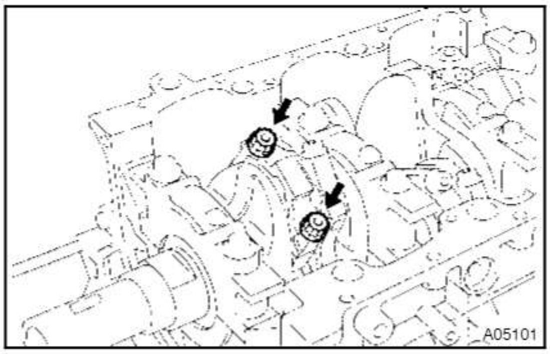

(a) Apply a light coat of engine oil on the threads and under the heads of the connecting rod cap bolts.

(b) Install and alternately tighten the 2 connecting rod cap bolts in several passes.

Torque: 24.5 N·m (250 kgf·cm, 18 ft·lbf)

If any one of the connecting rod cap bolts does not meet the torque specification, replace the connecting rod cap bolts.

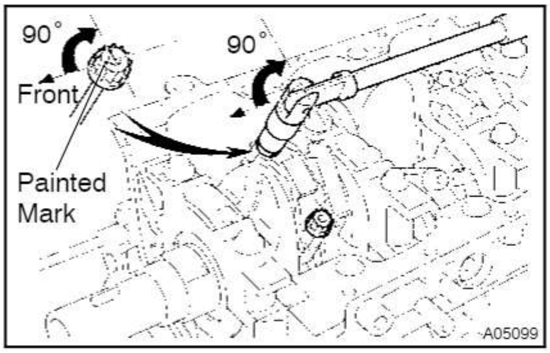

(c) Mark the front of the connecting cap bolt with paint.

(d) Retighten the cap bolts 90° as shown.

(e) Check that the painted mark is now at a 90° angle to the front.

(f) Check that the crankshaft turns smoothly.

13. CHECK CONNECTING ROD THRUST CLEARANCE (See page EM–70)

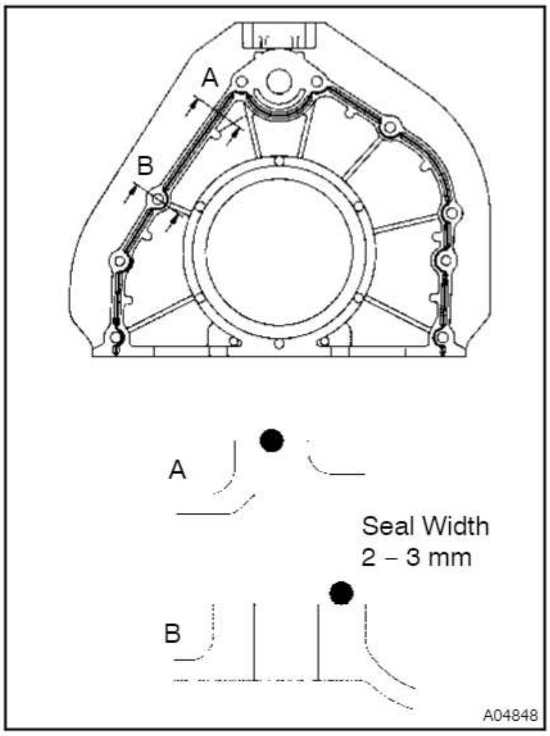

14. INSTALL REAR OIL SEAL RETAINER

(a) Remove any old packing (FIPG) material and be careful not to drop any oil on the contact surfaces of the oil seal retainer and cylinder block.

- Using a razor blade and gasket scraper, remove all the oil packing (FIPG) material from the gasket surfaces and sealing grooves.
- Thoroughly clean all components to remove all the loose material.
- Using a non–residue solvent, clean both sealing surfaces.

(b) Apply seal packing to the oil seal retainer as shown in the illustration.

Seal packing: Part No. 08826–00080 or equivalent

- Install a nozzle that has been cut to a 2 – 3 mm (0.08 – 0.12 in.) opening.
- Parts must be assembled within 5 minutes of application. Otherwise the material must be removed and reapplied.
- Immediately remove nozzle from the tube and reinstall cap.

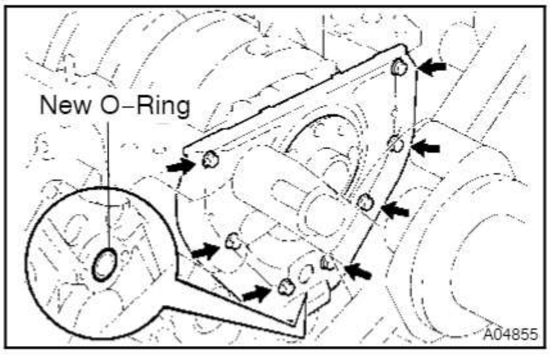

(c) Install a new O–ring to the cylinder block.

(d) Install the oil seal retainer with the 7 bolts.

Torque: 8.0 N·m (80 kgf·cm, 71 in.·lbf)

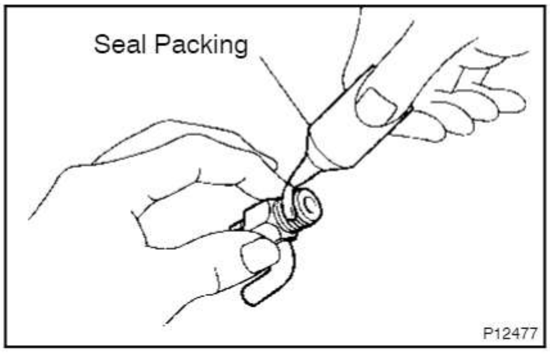

15. INSTALL ENGINE COOLANT DRAIN UNIONS

(a) Apply seal packing to 2 or 3 threads.

Seal packing: Part No. 08826–00100 or equivalent

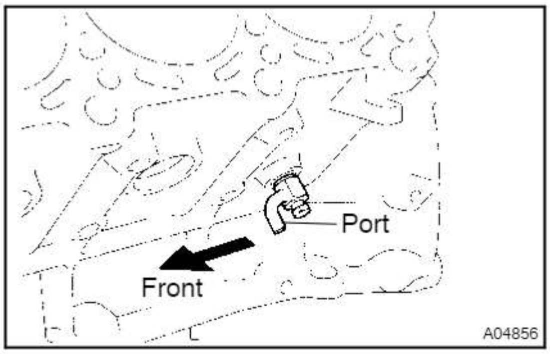

(b) Install the 2 drain unions.

Torque: 49 N·m (500 kgf·cm, 36 ft·lbf)

HINT:

After applying the specified torque, rotate the drain union clockwise until its drain port is facing forward.

16. **INSTALL OIL PUMP (See page LU–15)**
17. **INSTALL OIL STRAINER (See page LU–15)**
18. **INSTALL NO.1 OIL PAN (See page LU–15)**
19. **INSTALL OIL PAN BAFFLE PLATE (See page LU–15)**
20. **INSTALL NO.2 OIL PAN (See page LU–15)**
21. **INSTALL WATER PUMP (See page CO–7)**
22. **INSTALL ENGINE MOUNTING BRACKETS**

Install the mounting bracket with the 4 bolts. Install the 2 mounting brackets.

Torque: 36 N·m (370 kgf·cm, 27 ft·lbf)

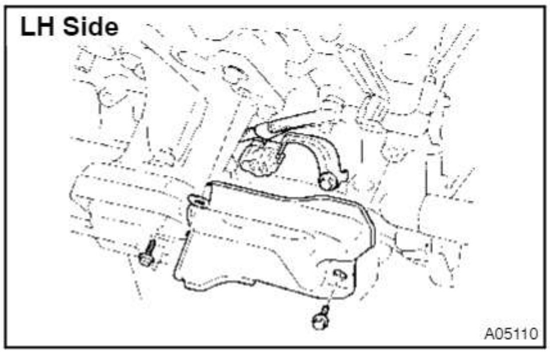

23. **Europe:**
INSTALL ENGINE WIRE TO LH SIDE OF CYLINDER BLOCK

(a) Install the bracket on the engine wire with the bolt.
(b) Connect the oil level sensor connector.
(c) Install the engine wire cover with the 2 bolts.

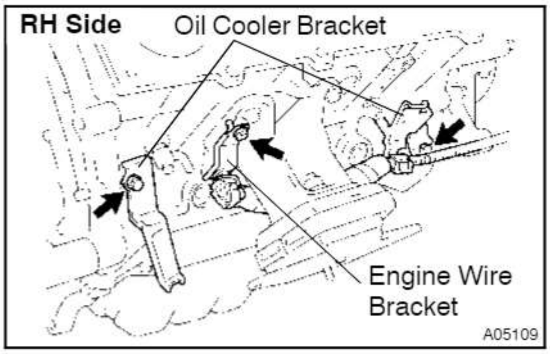

24. **Europe:**
INSTALL ENGINE WIRE TO RH SIDE OF CYLINDER BLOCK

Install the engine wire bracket and oil cooler bracket on the engine wire with the 2 bolts.

25. **A/T:**
INSTALL OIL COOLER PIPE BRACKET

(a) Europe:
Install the bracket with the bolt.
(b) Except Europe:
Install the bracket with the bolt. Install the 2 brackets.

26. **INSTALL KNOCK SENSORS (See page FI–69)**
27. **INSTALL STARTER**

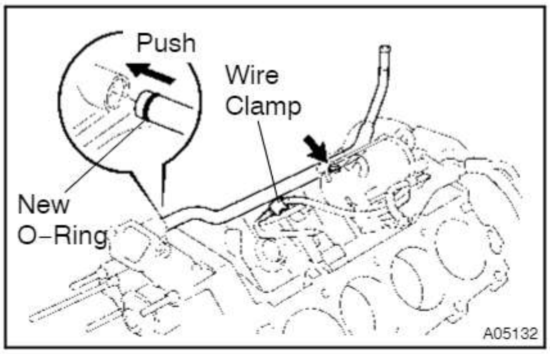

28. INSTALL WATER BYPASS PIPE

(a) Install a new O–ring to the water bypass pipe.

(b) Apply soapy water to the O–ring.

(c) Push in the water bypass pipe end into the pipe hole of the water pump.

(d) Install the water bypass pipe with the bolt.
Torque: 18 N·m (185 kgf·cm, 13 ft·lbf)

(e) Install the wire clamp to the bracket of the water bypass pipe.

29. INSTALL CYLINDER HEADS (See page EM–55)

30. INSTALL TIMING BELT AND PULLEYS (See page EM–23)

31. DISCONNECT ENGINE FROM ENGINE STAND

32. A/T: INSTALL DRIVE PLATE

HINT:

- The mounting bolts are tightened in 2 progressive steps (steps (c) and (e)).
- If any one of the mounting bolts is broken or deformed, replace it.

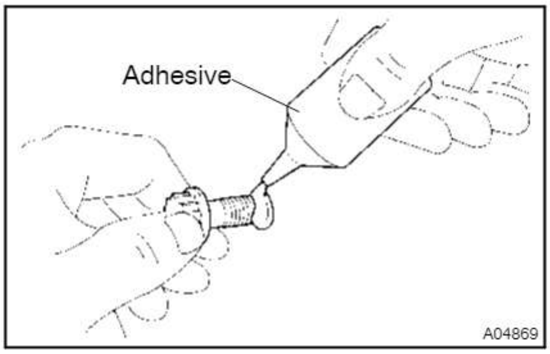

(a) Apply adhesive to 2 or 3 threads of the mounting bolt end.
Adhesive:
Part No. 08833–00070, THREE BOND 1324 or equivalent.

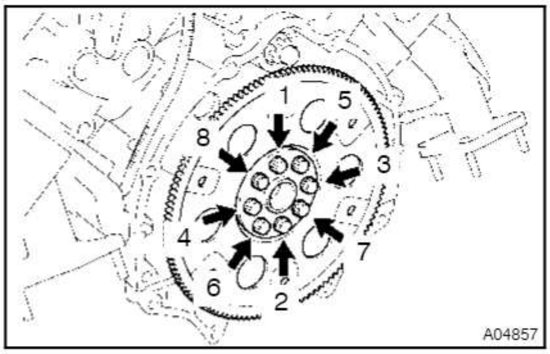

(b) Install the front spacer, drive plate and rear spacer on the crankshaft.

(c) Install and uniformly tighten the 8 mounting bolts in several passes, in the sequence shown.
Torque: 49 N·m (500 kgf·cm, 36 ft·lbf)

If any one of the mounting bolts does not meet the torque specification, replace the mounting bolt.

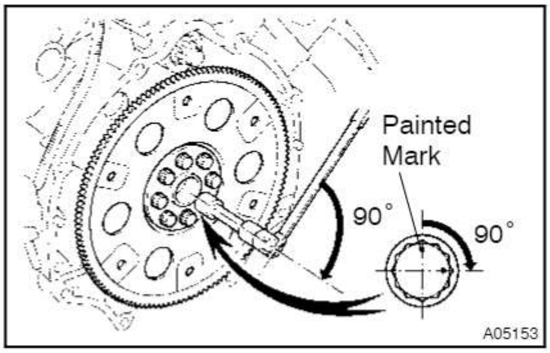

(d) Mark the mounting bolt with paint.

(e) Retighten the mounting bolts by 90° in the numerical order shown.

(f) Check that the painted mark is now at a 90° angle to (e).

33. M/T: INSTALL FLYWHEEL

(See procedure in step 32)
Torque: 29.5 N·m (300 kgf·cm, 22 ft·lbf)

EMISSION CONTROL SYSTEM

EC092–01

PURPOSE

The emission control systems are installed to reduce the amount of HC, CO and NOx exhausted from the engine ((3) and (4)), to prevent the atmospheric release of blow–by gas–containing HC (1) and evaporated fuel containing HC being released from the fuel tank (2).

The function of each system is shown in the following table:

System	Abbreviation	Function
(1) Positive Crankcase Ventilation	PCV	Reduces HC
(2) Evaporative Emission Control	EVAP	Reduces evaporated HC
(3) Three–Way Catalytic Converter	TWC	Reduces HC, CO and NOx
(4) Electronic Fuel Injection*	EFI	Injects a precisely timed, optimum amount of fuel for reduced exhaust emissions

Remark: * For inspection and repair of the EFI system, refer to the FI section in this manual.

PARTS LAYOUT AND SCHEMATIC DRAWING

LOCATION

Europe

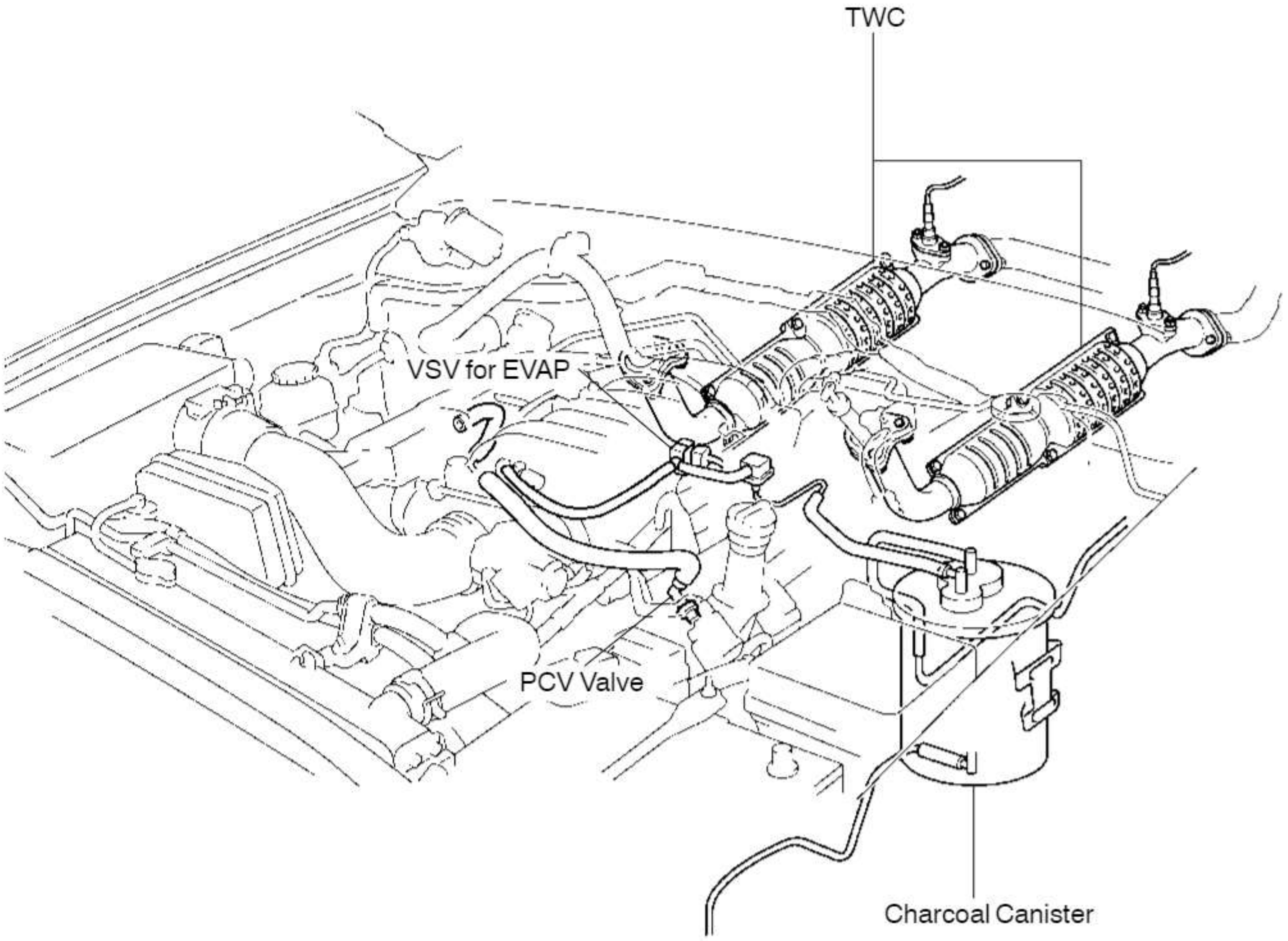

B03289

Except Europe

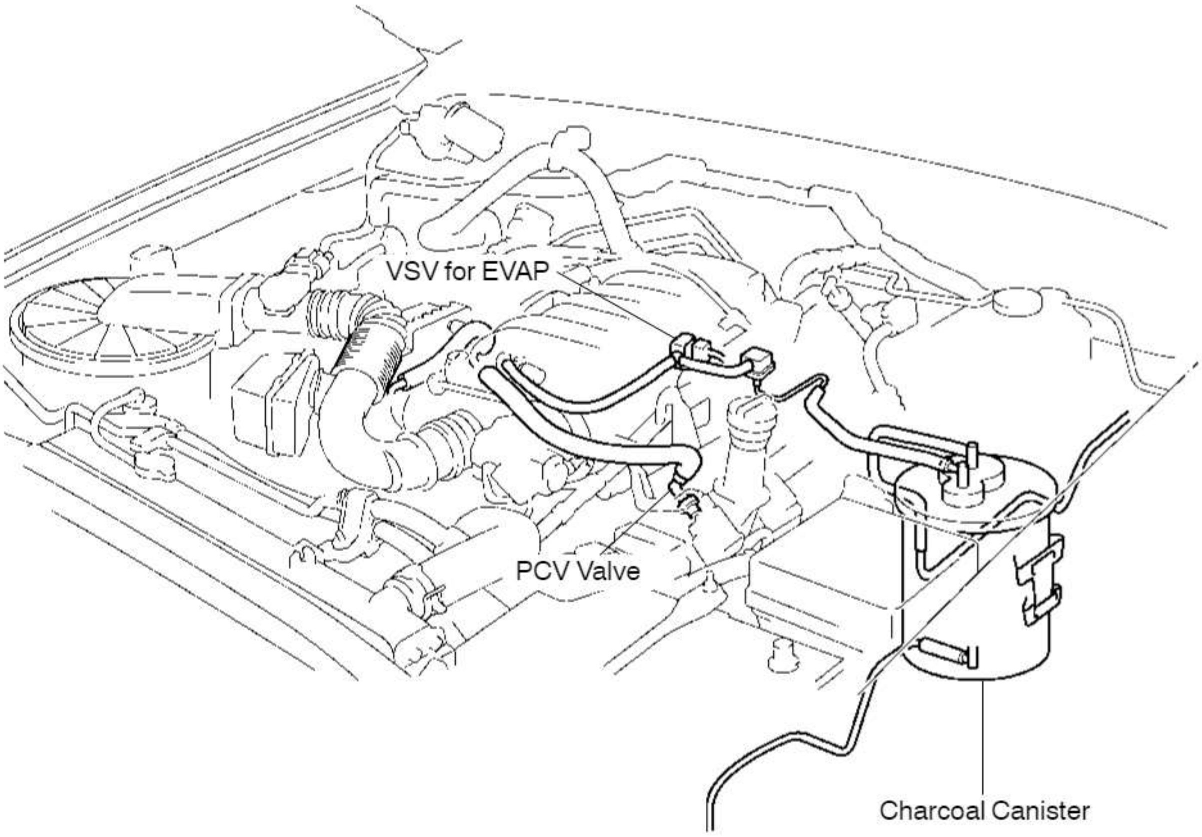

B05692

DRAWING

EC095–01

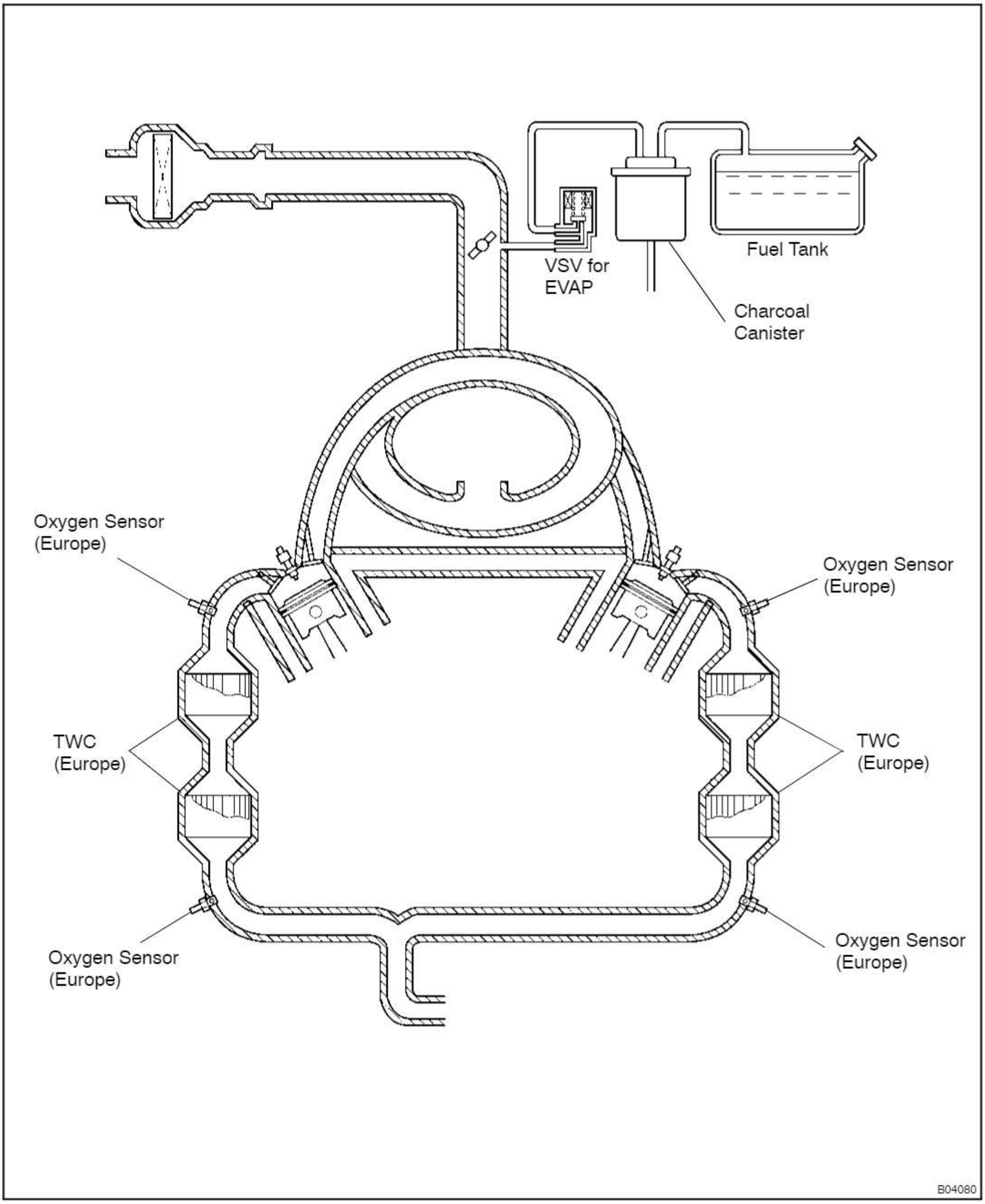

POSITIVE CRANKCASE VENTILATION (PCV) SYSTEM

EC093–01

INSPECTION

1. REMOVE V–BANK COVER
2. REMOVE PCV VALVE
3. INSTALL CLEAN HOSE TO PCV VALVE

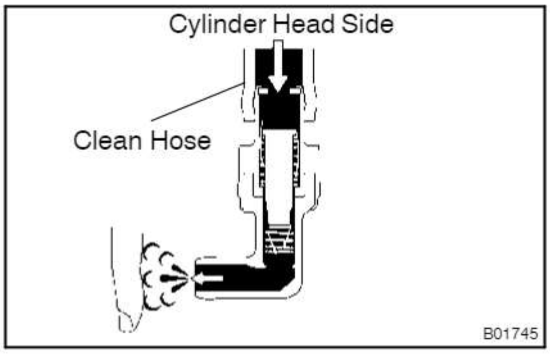

4. **INSPECT PCV VALVE OPERATION**

(a) Blow air into the cylinder head side, and check that air passes through easily.

CAUTION:
Do not suck air through the valve.
Petroleum substances inside the valve are harmful.

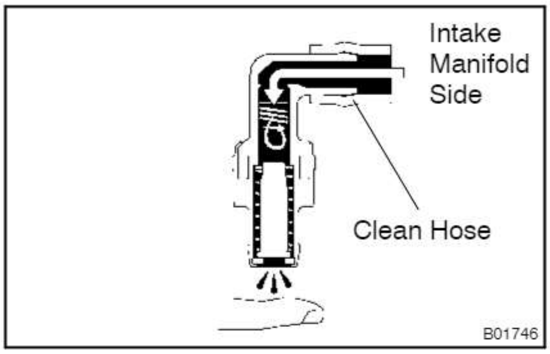

(b) Blow air into the intake manifold side, and check that air passes through with difficulty.

If operation is not as specified, replace the PCV valve.

5. **REMOVE CLEAN HOSE FROM PCV VALVE**
6. **REINSTALL PCV VALVE**

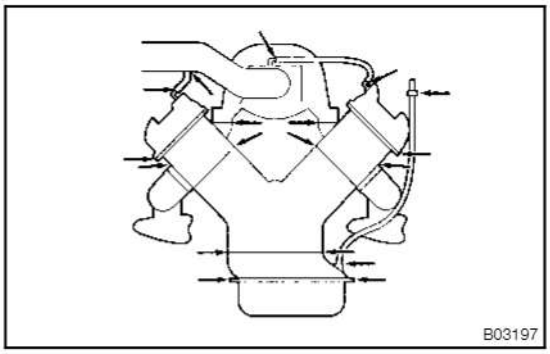

7. **VISUALLY INSPECT HOSE, CONNECTIONS AND GASKETS**

Check for cracks, leaks or damage.

8. **REINSTALL V–BANK COVER**

EVAPORATIVE EMISSION (EVAP) CONTROL SYSTEM

EC096–01

INSPECTION

1. VISUALLY INSPECT LINES AND CONNECTIONS

Look for loose connections, sharp bends or damage.

2. VISUALLY INSPECT FUEL TANK

Look for deformation, cracks or fuel leakage.

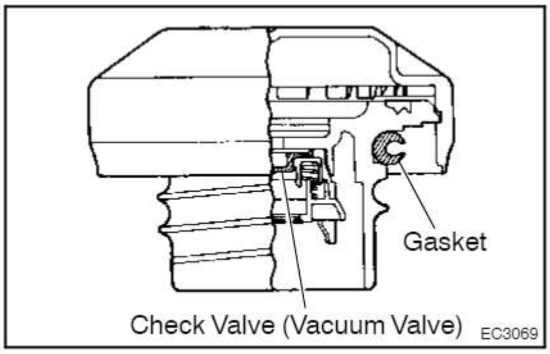

3. VISUALLY INSPECT FUEL TANK CAP

Check if the cap and/or gasket are deformed or damaged.
If necessary, repair or replace the cap.

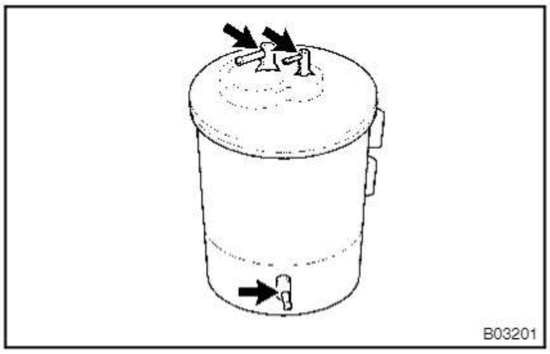

4. REMOVE CHARCOAL CANISTER

5. VISUALLY INSPECT CHARCOAL CANISTER

Look for cracks or damage.

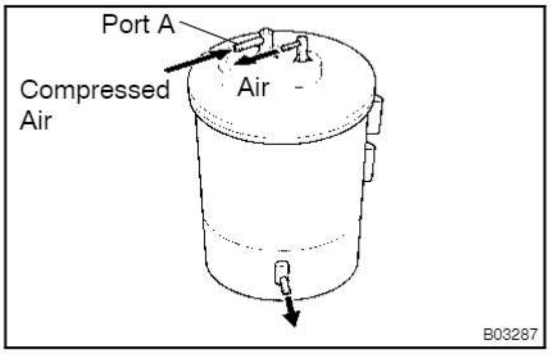

6. CHECK FOR CLOGGED FILTER, AND STUCK CHECK VALVE

(a) Using low pressure compressed air (4.71 kPa (48 gf/cm^2, 0.68 psi)), blow into port A and check that air flows without resistance from the other ports.

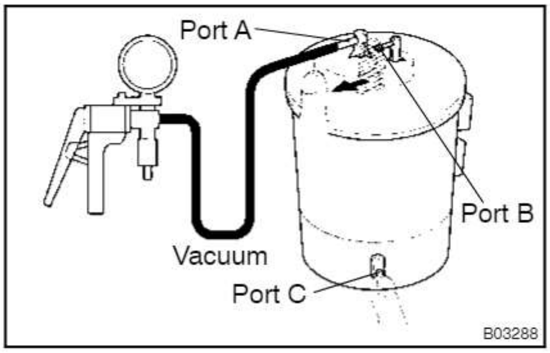

(b) Apply vacuum (1.96 kPa (20 gf/cm^2, 0.28 psi)) to port A, check that the vacuum does not decrease when port B and C are closed, and check that the vacuum decreases when port B is released.

If a problem is found, replace the charcoal canister.

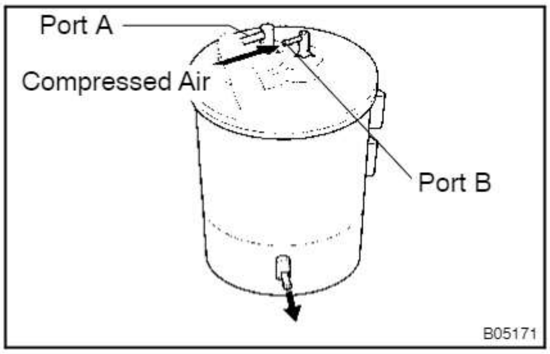

7. CLEAN FILTER IN CANISTER

Clean the filter by blowing 294 kPa (3 kgf/cm^2, 43 psi) of compressed air into port B while holding port A closed.

NOTICE:

- **Do not attempt to wash the canister.**
- **No activated carbon should come out.**

8. REINSTALL CHARCOAL CANISTER

9. INSPECT VSV FOR EVAP (See page FI–62)

THREE–WAY CATALYTIC CONVERTER (TWC) SYSTEM (Europe)

COMPONENTS

EC097–01

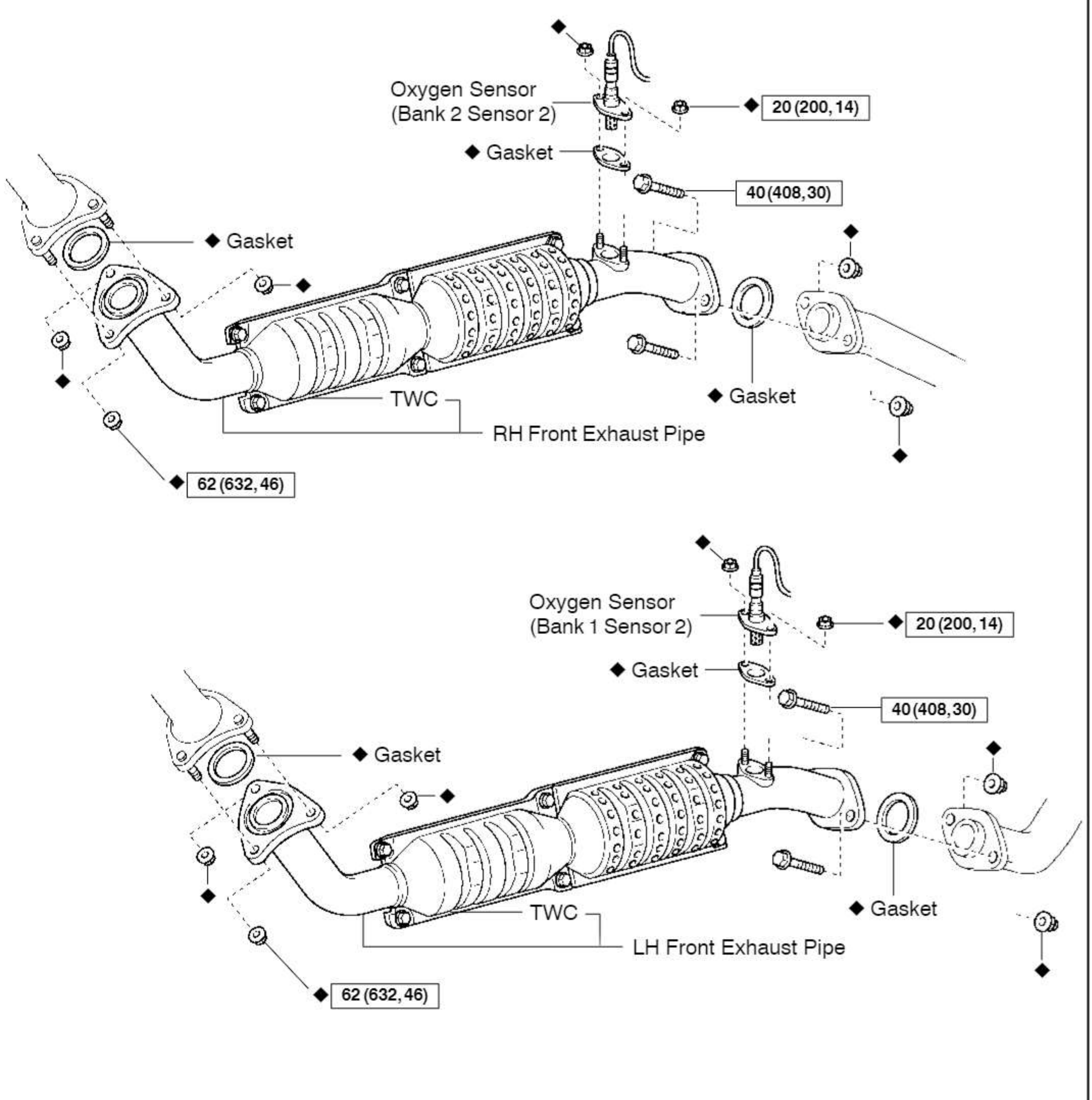

N·m (kgf·cm, ft·lbf) : Specified torque
◆ Non–reusable part

B03194

INSPECTION

1. CHECK EXHAUST PIPE ASSEMBLY

(a) Check the connections for looseness or damage.
(b) Check the clamps for weakness, cracks or damage.

2. INSPECT TWC

Check for dents or damage.

If any part of protector is damaged or dented to the extent that it contacts the TWC, repair or replace it.

3. INSPECT HEAT INSULATOR

(a) Check the heat insulator for damage.
(b) Check for adequate clearance between the TWC and heat insulator.

EFI SYSTEM

PRECAUTION

FI0DD–01

1. **BEFORE WORKING ON FUEL SYSTEM, DISCONNECT NEGATIVE (–) TERMINAL CABLE FROM BATTERY**

HINT:

Any diagnostic trouble code retained by the computer will be erased when the negative (–) terminal cable is removed from the battery.

Therefore, if necessary, read the diagnosis before removing the negative (–) terminal cable from the battery.

2. **DO NOT SMOKE OR WORK NEAR AN OPEN FLAME WHEN WORKING ON THE FUEL SYSTEM**
3. **KEEP GASOLINE AWAY FROM RUBBER OR LEATHER PARTS**
4. **MAINTENANCE PRECAUTIONS**

(a) In event of engine misfire, these precautions should be taken.
  (1) Check proper connection to battery terminals, etc.
  (2) After repair work, check that the ignition coil terminals and all other ignition system lines are reconnected securely.
  (3) When cleaning the engine compartment, be especially careful to protect the electrical system from water.

(b) Precautions when handling the oxygen sensor.
  (1) Do not allow oxygen sensor to drop or hit against an object.
  (2) Do not allow the oxygen sensor to come into contact with water.

5. **IF VEHICLE IS EQUIPPED WITH MOBILE RADIO SYSTEM (HAM, CB, ETC.)**

If the vehicle is equipped with a mobile communication system, refer to the precaution in the IN section.

6. **AIR INDUCTION SYSTEM**

(a) Separation of the engine oil dipstick, oil filler cap, PCV hose, etc. may cause the engine to run out of tune.

(b) Disconnection, looseness or cracks in the parts of the air induction system between the throttle body and cylinder head will allow air suction and cause the engine to run out of tune.

7. **ELECTRONIC CONTROL SYSTEM**

(a) Before removing EFI wiring connectors, terminals, etc., first disconnect the power by either turning the ignition switch OFF or disconnecting the negative (–) terminal cable from the battery.

HINT:

Always check the diagnostic trouble code before disconnecting the negative (–) terminal cable from the battery.

(b) When installing the battery, be especially careful not to incorrectly connect the positive (+) and negative (–) cables.

(c) Do not permit parts to receive a severe impact during removal or installation. Handle all EFI parts carefully, especially the ECU.

(d) Be careful during troubleshooting as there are numerous transistor circuit, and even slight terminal contact can cause further troubles.

(e) Do not open the ECU cover.

(f) When inspecting during rainy weather, take care to prevent entry of water. Also, when washing the engine compartment, prevent water from getting on the EFI parts and wiring connectors.

(g) Parts should be replaced as an assembly.

(h) Care should be taken when pulling out and inserting wiring connectors.
  (1) Release the lock and pull out the connector, pulling on the connectors.
  (2) Fully insert the connector and check that it is locked.

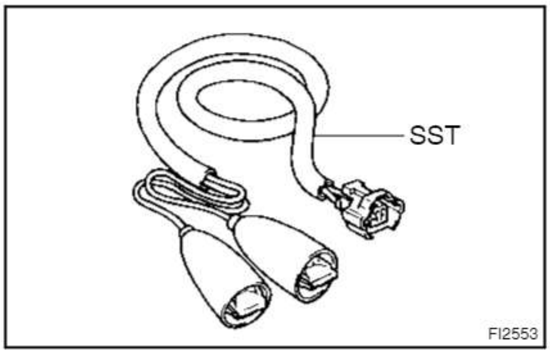

(i) Use SST for inspection or test of the injector or its wiring connector.
SST 09842–30070

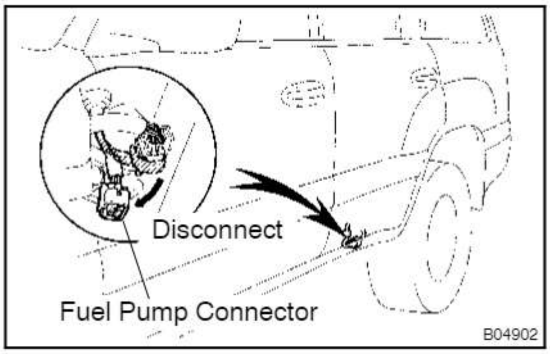

8. FUEL SYSTEM

(a) When disconnecting the high fuel pressure line, a large amount of gasoline will spill out, so observe these procedures:
  (1) Disconnect the fuel pump connector.
  (2) Start the engine. After the engine has stopped on its own, turn the ignition switch OFF.
  (3) Put a container under the connection.
  (4) Slowly loosen the connection.
  (5) Disconnect the connection.
  (6) Plug the connection with a rubber plug.
  (7) Reconnect the fuel pump connector.

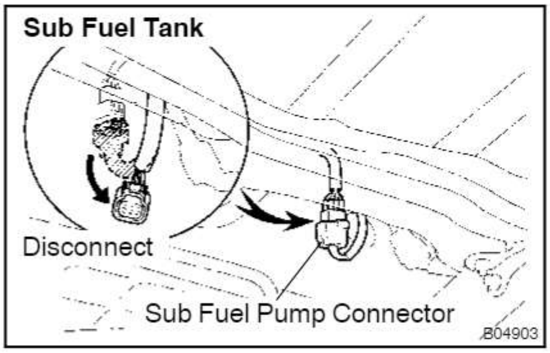

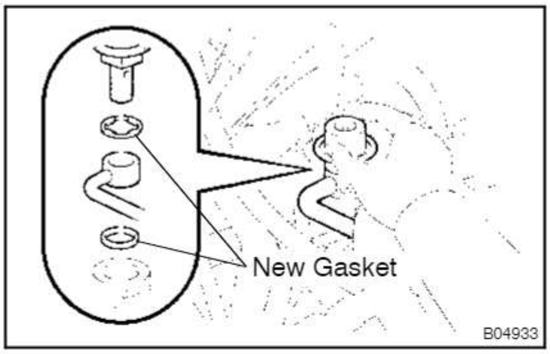

(b) When connecting the union bolt (fuel pressure pulsation damper) on the high pressure pipe union, observe these procedures:
  (1) Always use 2 new gaskets.
  (2) Tighten the union bolt by hand.

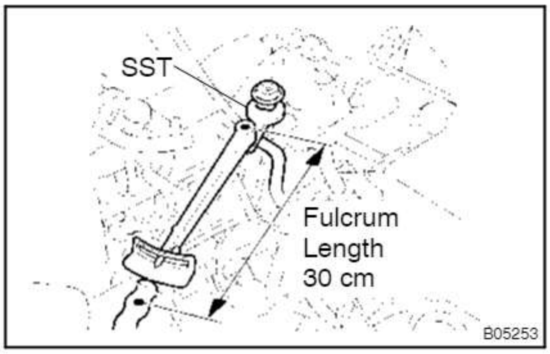

  (3) Using SST, tighten the union bolt to the specified torque.

SST 09612–24014 (09617–24011)

Torque:
33 N·m (340 kgf·cm, 24 ft·lbf) for use with SST
39 N·m (400 kgf·cm, 29 ft·lbf)

HINT:
Use a torque wrench with a fulcrum length of 30 cm (11.81 in.).

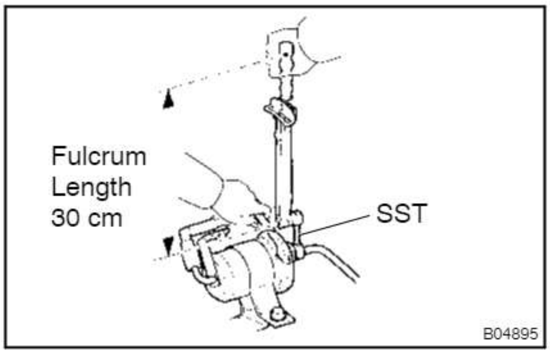

(c) When connecting the flare nut on the high pressure pipe union, observe these procedures:
  (1) Apply a light coat of engine oil to the flare nut, and tighten the flare nut by hand.
  (2) Using SST, tighten the flare nut to the specified torque.

SST 09631–22020

NOTICE:
Do not rotate the fuel filter outlet, when tightening the flare nut.

Torque:
34 N·m (345 kgf·cm, 25 ft·lbf) for use with SST
38 N·m (380 kgf·cm, 28 ft·lbf)

HINT:
Use a torque wrench with a fulcrum length of 30 cm (11.81 in.).

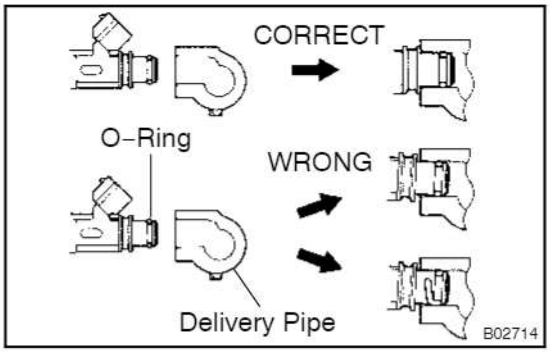

(d) Observe these precautions when removing and installing the injectors.
  (1) Never reuse the O–ring.
  (2) When placing a new O–ring on the injector, take care not to damage it in any way.
  (3) Coat a new O–ring with spindle oil or gasoline before installing–never use engine, gear or brake oil.

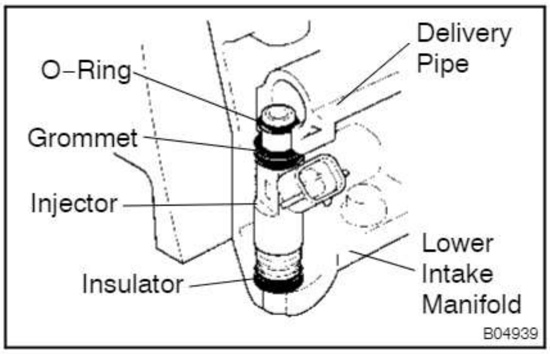

(e) Install the injector to the delivery pipe and lower intake manifold as shown in the illustration.
Before installing the injector, must apply spindle oil or gasoline on the place where a delivery pipe or an intake manifold touches an O–ring of the injector.

(f) Observe these precautions when disconnecting the fuel tube connector (quick type):

(1) Check if there is any dirt like mud on the pipe and around the connector before disconnecting them and clean the dirt away.

(2) Be sure to disconnect with hands.

(3) Type A:
When the connector and the pipe are stuck, pinch the retainer between the hands, push and pull the connector to free to disconnect and pull it out. Do not use any tool at this time.
Type B:
When the connector and the pipe are stuck, push and pull the connector to free to disconnect and pull it out. Do not use any tool at this time.

(4) Inspect if there is any dirt or the likes on the seal surface of the disconnected pipe and clean it away.

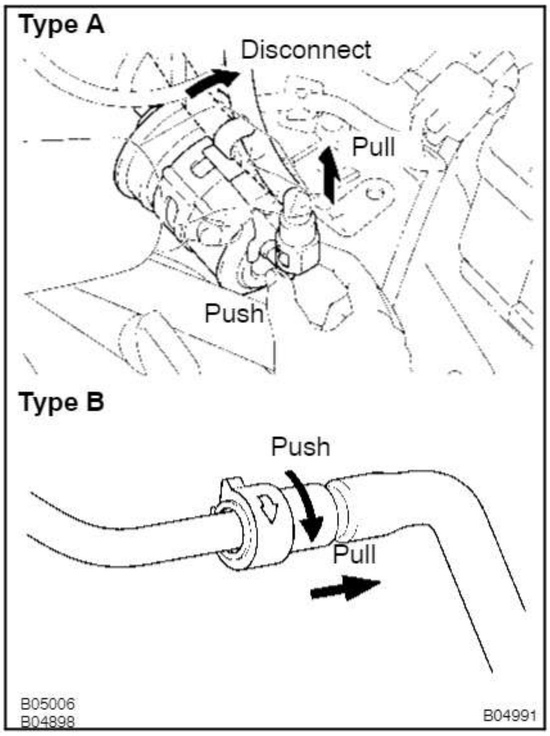

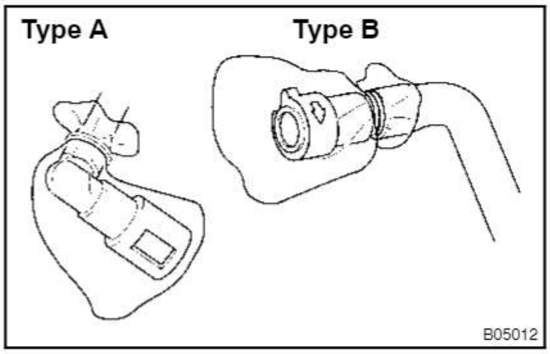

(5) Prevent the disconnected pipe and connector from damaging and mixing foreign objects by covering them with a vinyl bag.

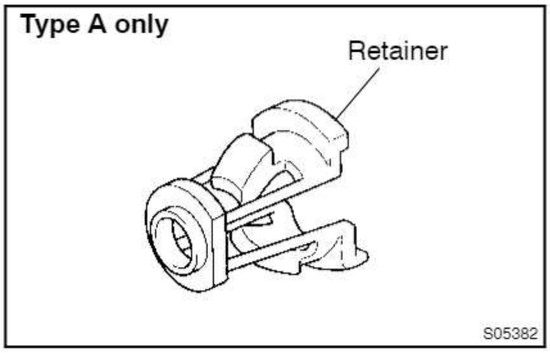

(g) Observe these precautions when connecting the fuel tube connector (quick type):

(1) Do not reuse the retainer removed from the pipe.

(2) Must use hands without using tools when to remove the retainer from the pipe.

(3) Check if there is any damage or foreign objects on the connected part of the pipe.

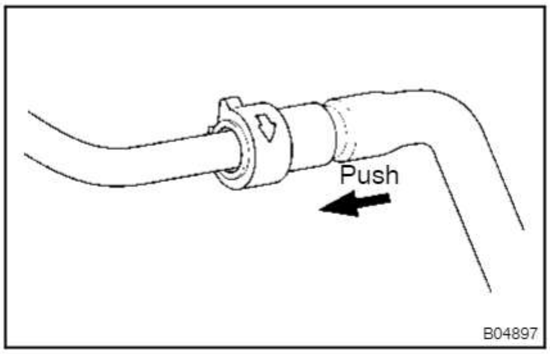

(4) Match the axis of the connector with axis of the pipe, and push in the connector until the connector makes a "click" sound. In case that the connections is tight, apply little amount of new engine oil on the tip of the pipe.

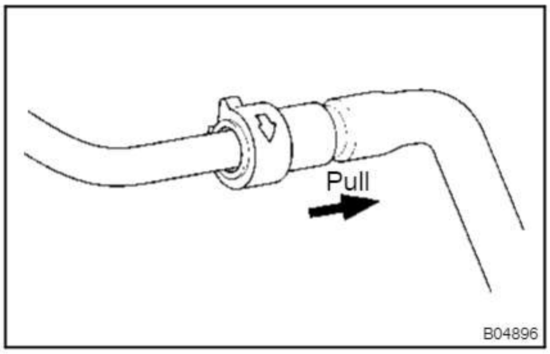

(5) After having finished the connection, check if the pipe and the connector are securely connected by pulling them.

(6) Check if there is any fuel leakage.

(h) Observe these precautions when handling nylon tube.

(1) Pay attention not to turn the connected part of the nylon tube and the quick connector with force when connecting them.

(2) Pay attention not to kink the nylon tube.

(3) Do not remove the EPDM protector on the outside of the nylon tube.

(4) Must not close the piping with the nylon tube by bending it.

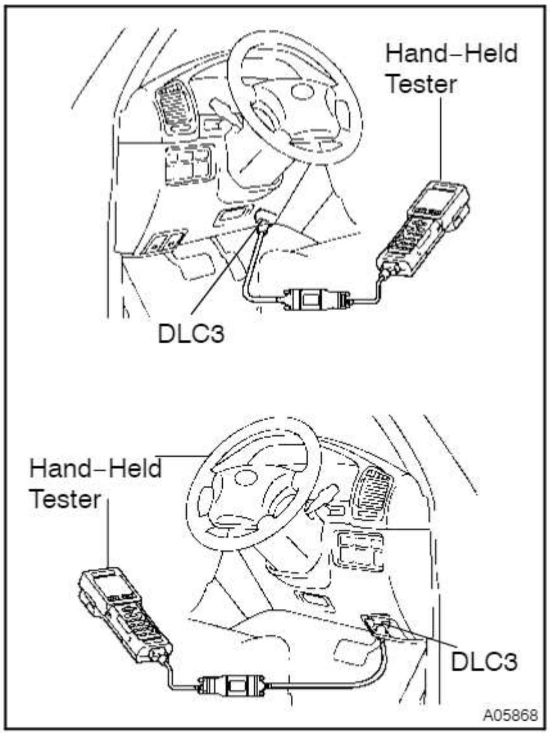

(i) Check that there are no fuel leaks after doing maintenance anywhere on the fuel system.

(1) Connect a hand–held tester to the DLC3.

(2) Turn the ignition switch ON and push the hand–held tester main switch ON.

NOTICE:

Do not start the engine.

(3) Select the ACTIVE TEST mode on the hand–held tester.

(4) Please refer to the hand–held tester operator's manual for further details.

(5) If you have no hand–held tester, connect the positive (+) and negative (–) leads from the battery to the fuel pump connector. (See page FI–7)

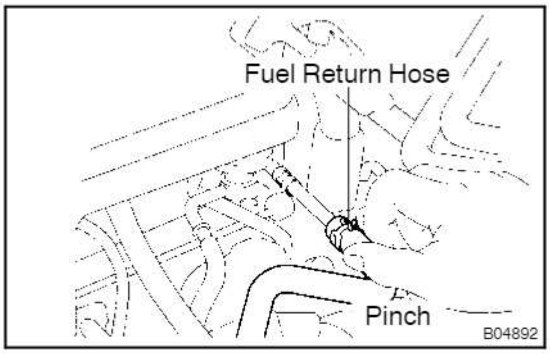

(6) Pinch the fuel return hose.
The pressure in the high pressure line will rise to approx. 392 kPa (4 kgf/cm^2, 57 psi). In this state, check to see that there are no leaks from any part of the fuel system.

NOTICE:

Always pinch the hose. Avoid bending as it may cause the hose to crack.

(7) Turn the ignition switch OFF.

(8) Disconnect the hand–held tester from the DLC3.

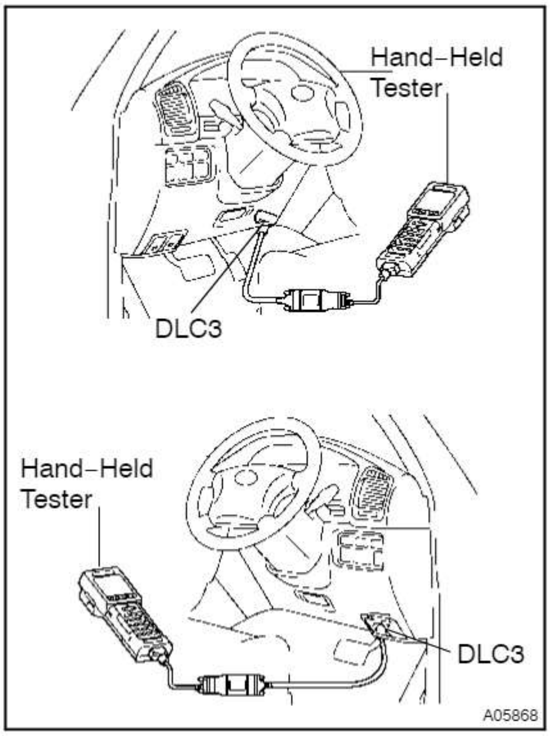

FUEL PUMP

ON–VEHICLE INSPECTION

FI0DE–01

1. CHECK FUEL PUMP OPERATION

(a) Connect a hand–held tester to the DLC3.

(b) Turn the ignition switch ON, and push the hand–held tester main switch ON.

NOTICE:

Do not start the engine.

(c) Select the ACTIVE TEST mode on the hand–held tester.

(d) Please refer to the hand–held tester operator's manual for further details.

(e) If you have no hand–held tester, connect the positive (+) and negative (–) leads from the battery to the fuel pump connector. (See step 3)

(f) Disconnect the fuel return hose from the clamp on the V–bank cover.

(g) Remove the 2 bolts, nuts and V–bank cover.

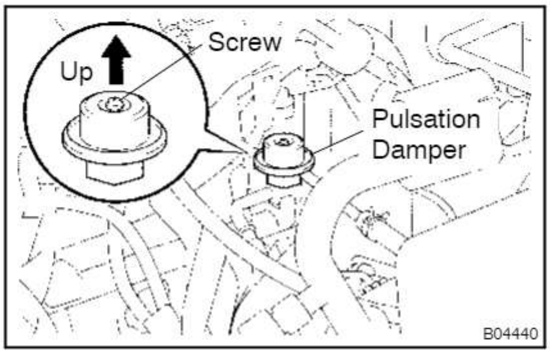

(h) Check that the pulsation damper screw rises up when the fuel pump operates.

If operation is not as specified, check these parts:

- Fuses
- EFI main relay
- Fuel pump
- Engine ECU
- Wiring connections

(i) Turn the ignition switch OFF.

(j) Disconnect the hand–held tester from the DLC3.

2. CHECK FUEL PRESSURE

(a) Check the battery positive voltage is above 12 V.

(b) Disconnect the negative (–) terminal cable from the battery.

(c) Remove the front fuel pipe from the LH delivery pipe.
(See page FI–27)

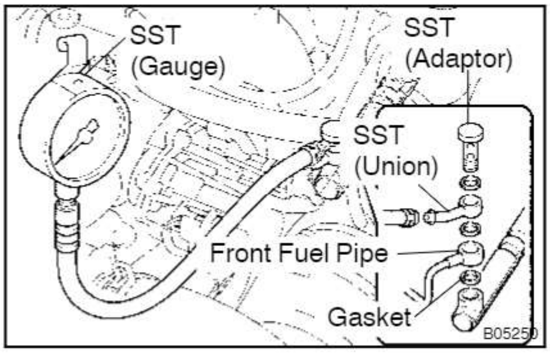

(d) Install the front fuel pipe and SST (pressure gauge) to the delivery pipe with 3 lower gaskets and SST (adaptor).
SST 09268–45012 (09268–41190, 90405–06167)
Torque: 39 N·m (400 kgf·cm, 29 ft·lbf)

(e) Wipe off any splattered gasoline.

(f) Reconnect the negative (–) terminal cable to the battery.

(g) Connect a hand–held tester to the DLC3.
(See step 1 in check fuel pump operation (a) to (e))

(h) Measure the fuel pressure.

Fuel pressure:
265 – 304 kPa (2.7 – 3.1 kgf/cm^2, 38 – 44 psi)

If pressure is high, replace the fuel pressure regulator.

If pressure is low, check these parts:

- Fuel hoses and connections
- Fuel pump
- Fuel filter
- Fuel pressure regulator

(i) Disconnect the hand–held tester from the DLC3.

(j) Start the engine.

(k) Measure the fuel pressure at idle.

Fuel pressure:
265 – 304 kPa (2.7 – 3.1 kgf/cm^2, 38 – 44 psi)

(l) Stop the engine.

(m) Check that the fuel pressure remains as specified for 5 minutes after the engine has stopped.

Fuel pressure: 147 kPa (1.5 kgf/cm^2, 21 psi) or more

If pressure is not as specified, check the fuel pump, pressure regulator and/or injectors.

(n) After checking fuel pressure, disconnect the negative (–) terminal cable from the battery and carefully remove the SST to prevent gasoline from splashing.

SST 09268–45012

(o) Reinstall the front fuel pipe to the LH delivery pipe. (See page FI–32)

(p) Reconnect the negative (–) terminal cable to the battery.

(q) Check for fuel leaks. (See page FI–1)

(r) Reinstall the V–bank cover with the 2 bolts and nuts.

(s) Reconnect the fuel return hose to the clamp on the V–bank cover.

3. INSPECT FUEL PUMP

(a) Remove the No.1 rear seats.

(b) Remove the 2 rear door scuff plates, step plates and rear seat lock covers.

(c) Pull off the front and rear floor carpets.

(d) Remove the 2 screws and rear floor service hole cover.

(e) Disconnect the fuel pump & sender gauge connector.

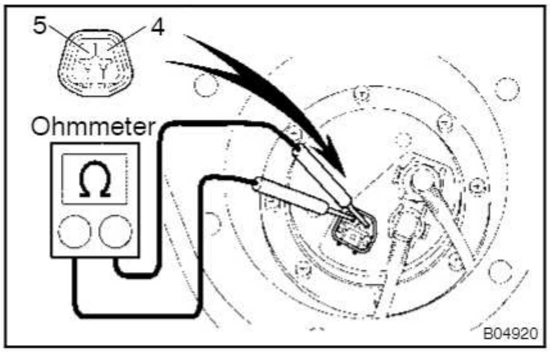

(f) Using an ohmmeter, measure the resistance between terminals 4 and 5.

Resistance: 0.2 – 3.0 Ω at 20°C (68°F)

If the resistance is not as specified, replace the fuel pump and/or lead wire.

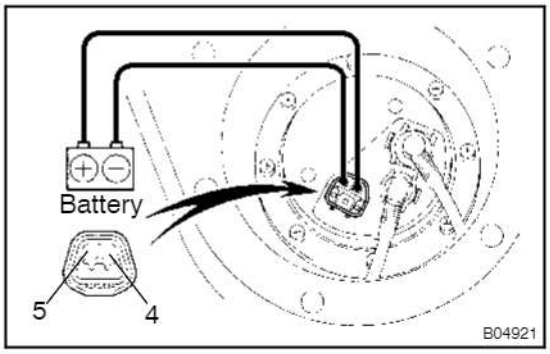

(g) Inspect the fuel pump operation.
Connect the positive (+) lead from the battery to terminal 4 of the connector, and the negative (–) lead to terminal 5. Check that the fuel pump operates.

NOTICE:

- **These tests must be done quickly (within 10 seconds) to prevent the coil burning out.**
- **Keep the fuel pump as far away from the battery as possible.**
- **Always do the switching at the battery side.**

If operation is not as specified, replace the fuel pump and/or lead wire.

(h) Reconnect the fuel pump & sender gauge connector.

(i) Reinstall the rear floor service hole cover with the 2 screws.

(j) Reinstall the front and rear floor carpets.

(k) Remove the 2 rear door scuff plates, step plates and rear sear lock covers.

(l) Reinstall the No.1 rear seats.

FI0DF–01

COMPONENTS

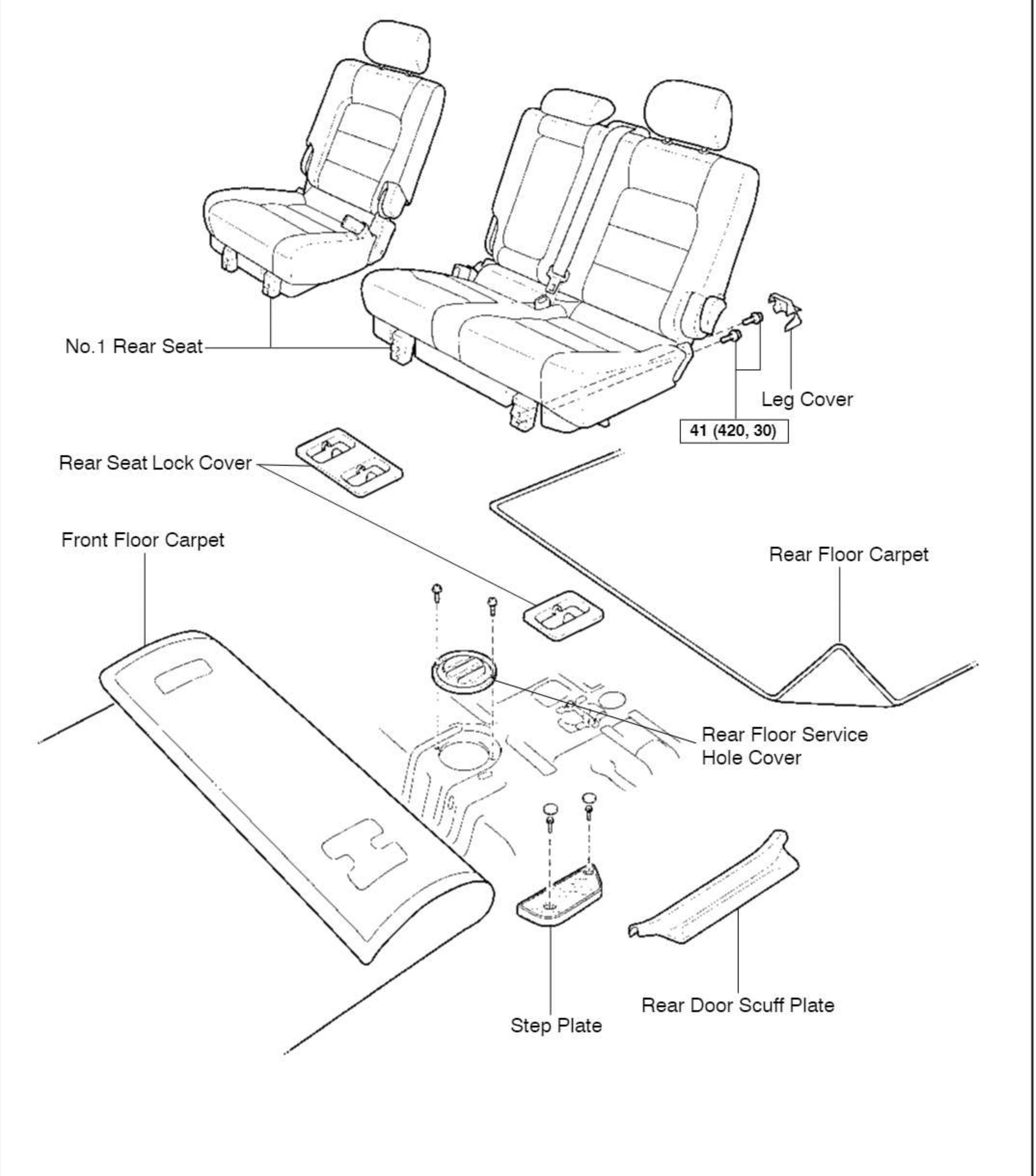

N·m (kgf·cm, ft·lbf) : Specified torque

B05255

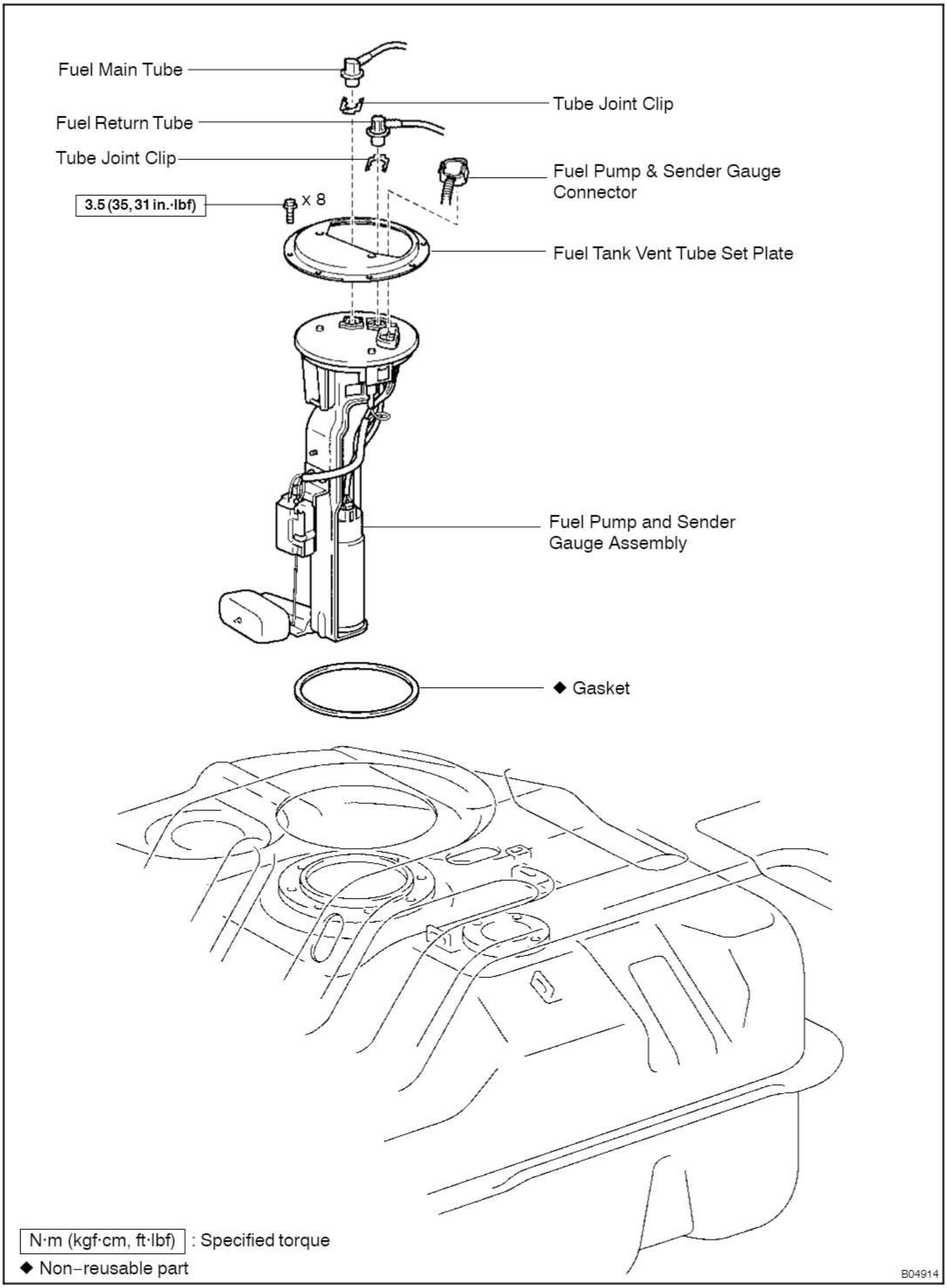
Fuel Main Tube
Tube Joint Clip
Fuel Return Tube
Tube Joint Clip
3.5 (35, 31 in.·lbf)
x 8
Fuel Pump & Sender Gauge Connector
Fuel Tank Vent Tube Set Plate
Fuel Pump and Sender Gauge Assembly
◆ Gasket
N·m (kgf·cm, ft·lbf) : Specified torque
◆ Non–reusable part
B04914

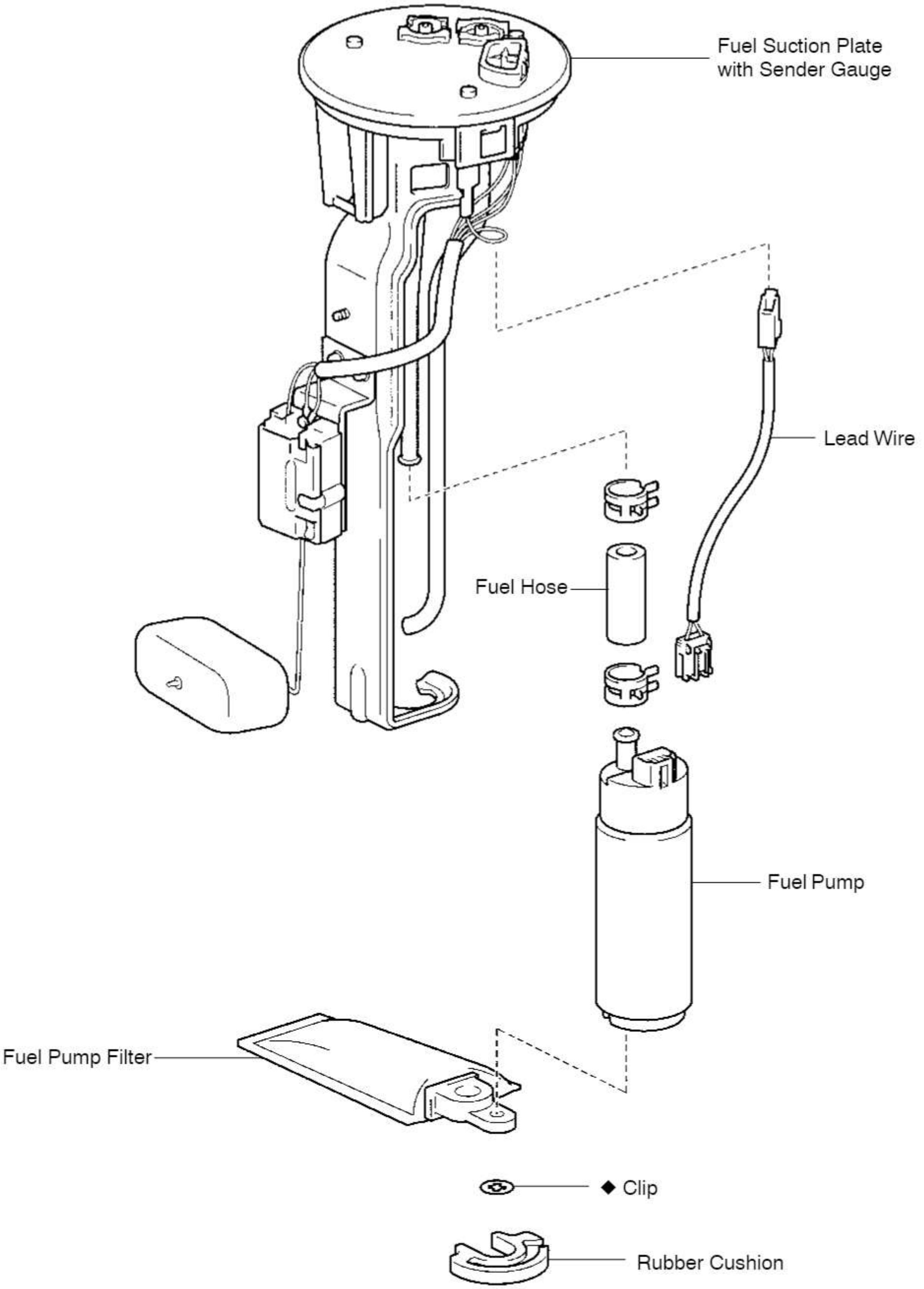

◆ Non–reusable part

FI0DG–01

REMOVAL

CAUTION:

Do not smoke or work near an open frame when working the fuel pump.

1. **REMOVE NO.1 REAR SEATS**
2. **REMOVE REAR DOOR SCUFF PLATES, STEP PLATES AND REAR SEAT LOCK COVERS**
3. **REMOVE FLOOR SERVICE HOLE COVER**

(a) Take off the front and rear floor carpets.

(b) Remove the 2 screws and service hole cover.

4. **DISCONNECT FUEL PUMP & SENDER GAUGE CONNECTOR**
5. **DISCONNECT FUEL MAIN TUBE AND RETURN TUBE (FUEL TUBE CONNECTORS) FROM FUEL SUCTION PLATE**

CAUTION:

- **Perform disconnecting operation of the fuel tube connector (quick type) after observing precaution. (See page FI–1)**
- **As there is retained pressure in the fuel line, prevent it from splashing inside the vehicle compartment.**
- **As the quick connector seals tube and suction plate through O–rings, perform the operation while taking sufficient care not to damage the contact surface or let the foreign matter stick on it.**
- **Be sure to perform the disconnection with your hands. Do not use tools.**
- **Do not bend or turn the nylon tube forcefully.**

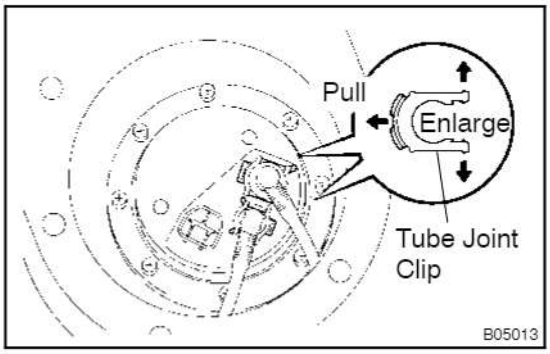

(a) Before operation, remove the foreign matter or dirt stick to the tube joint clips and clean them.

(b) Enlarge the tip of the clips with your finger and pull them out for disconnection.

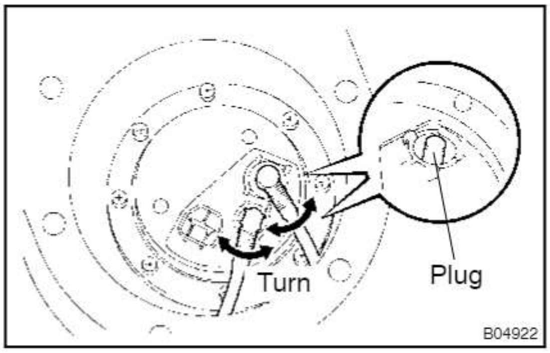

(c) Pull out the fuel main tube and return tube.

If the nylon tube and suction plate stick together, ease the connection by turning the nylon tube with your hand and pull it out for disconnection.

NOTICE:

Plug the port of the fuel suction plate with a clean rubber cap.

(d) After disconnection, protect the connector with a vinyl bag.

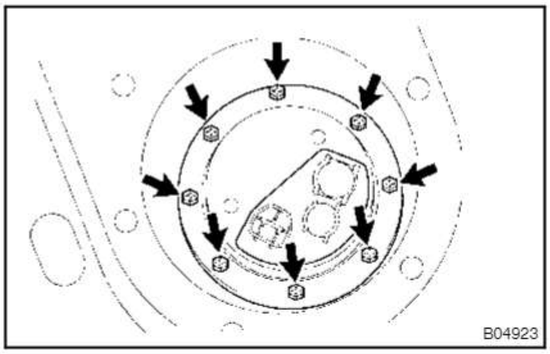

6. REMOVE FUEL PUMP AND SENDER GAUGE ASSEMBLY FROM FUEL TANK

(a) Remove the 8 bolts.

(b) Pull out the fuel pump and sender gauge assembly.

NOTICE:

- **Do not damage the fuel pump filter.**
- **Be careful that the arm of the sender gauge should not bent.**

(c) Remove the gasket from the fuel section plate.

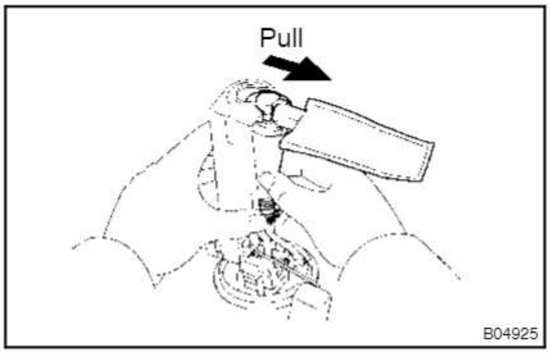

7. REMOVE LEAD WIRE FROM FUEL PUMP

8. REMOVE FUEL PUMP FROM FUEL PUMP BRACKET

(a) Pull out the lower side of the fuel pump from the pump bracket.

(b) Disconnect the fuel hose from the fuel pump, and remove the fuel pump.

(c) Remove the rubber cushion from the fuel pump.

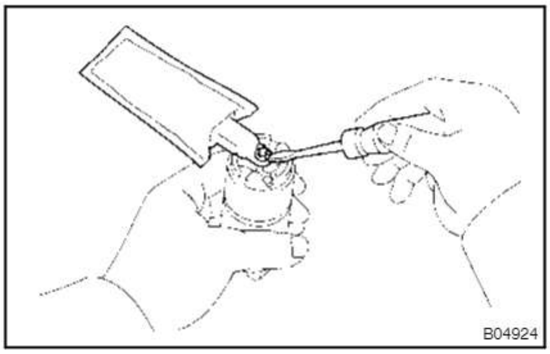

9. REMOVE FUEL PUMP FILTER FROM FUEL PUMP

(a) Using a small screwdriver, remove the clip.

(b) Pull out the pump filter.

FI0DH–01

INSTALLATION

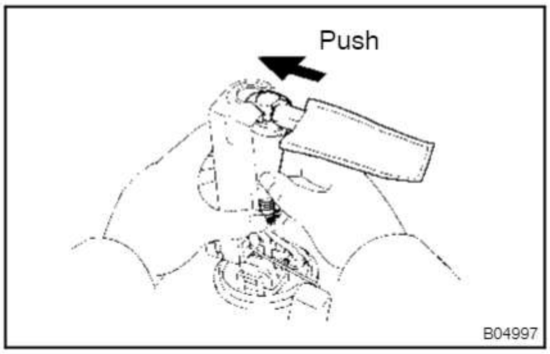

1. INSTALL FUEL PUMP FILTER TO FUEL PUMP

Install the pump filter with a new clip.

2. INSTALL FUEL PUMP TO FUEL PUMP BRACKET

(a) Install the rubber cushion to the fuel pump.
(b) Connect the fuel hose to the outlet port of the fuel pump.
(c) Install the fuel pump by pushing the lower side of the fuel pump.

3. INSTALL LEAD WIRE TO FUEL PUMP

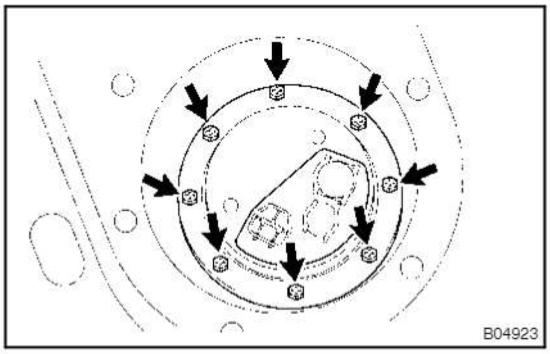

4. INSTALL FUEL PUMP AND SENDER GAUGE ASSEMBLY TO FUEL TANK

(a) Install a new gasket to the fuel suction plate.
(b) Insert the fuel pump and sender gauge assembly into the fuel tank.
(c) Install the fuel tank vent tube set plate with the 8 bolts.
Torque: 3.5 N·m (35 kgf·cm, 31 in.·lbf)

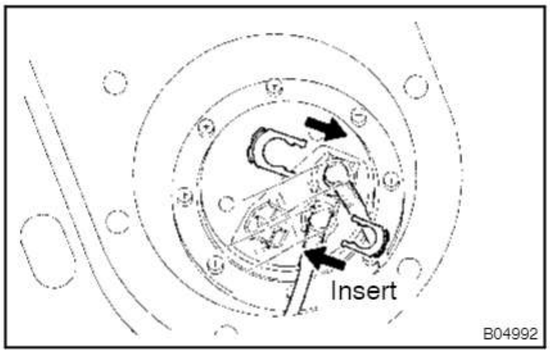

5. CONNECT FUEL MAIN TUBE AND RETURN TUBE (FUEL TUBE CONNECTORS) TO FUEL SUCTION PLATE

(a) Before installing the tube connectors, check to see the connection between the nylon tube and suction plate for the presence of foreign matters.
(b) Attach the fuel tube connectors to the ports of the fuel suction plate and insert the clips until you hear a click.

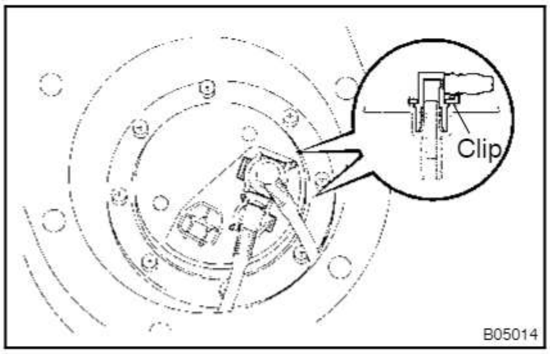

(c) After connection, pull out the clips to check to see that they are installed securely.

6. CONNECT FUEL PUMP & SENDER GAUGE CONNECTOR

7. CHECK FOR FUEL LEAKS (See page FI–1)

8. INSTALL FLOOR SERVICE HOLE COVER

(a) Install the service hole cover with the 2 screws.
(b) Cover the rear and front floor carpets.

9. INSTALL REAR DOOR SCUFF PLATES, STEP PLATES AND REAR SEAT LOCK COVERS

10. INSTALL NO.1 REAR SEATS

SUB FUEL PUMP (w/ Sub Fuel Tank)

FI0DI–01

ON–VEHICLE INSPECTION

CHECK SUB FUEL PUMP OPERATION AND FUEL PRESSURE
(See steps 1 and 2 in FI–7)

NOTICE:
Push the fuel tank changeover switch ON.

COMPONENTS

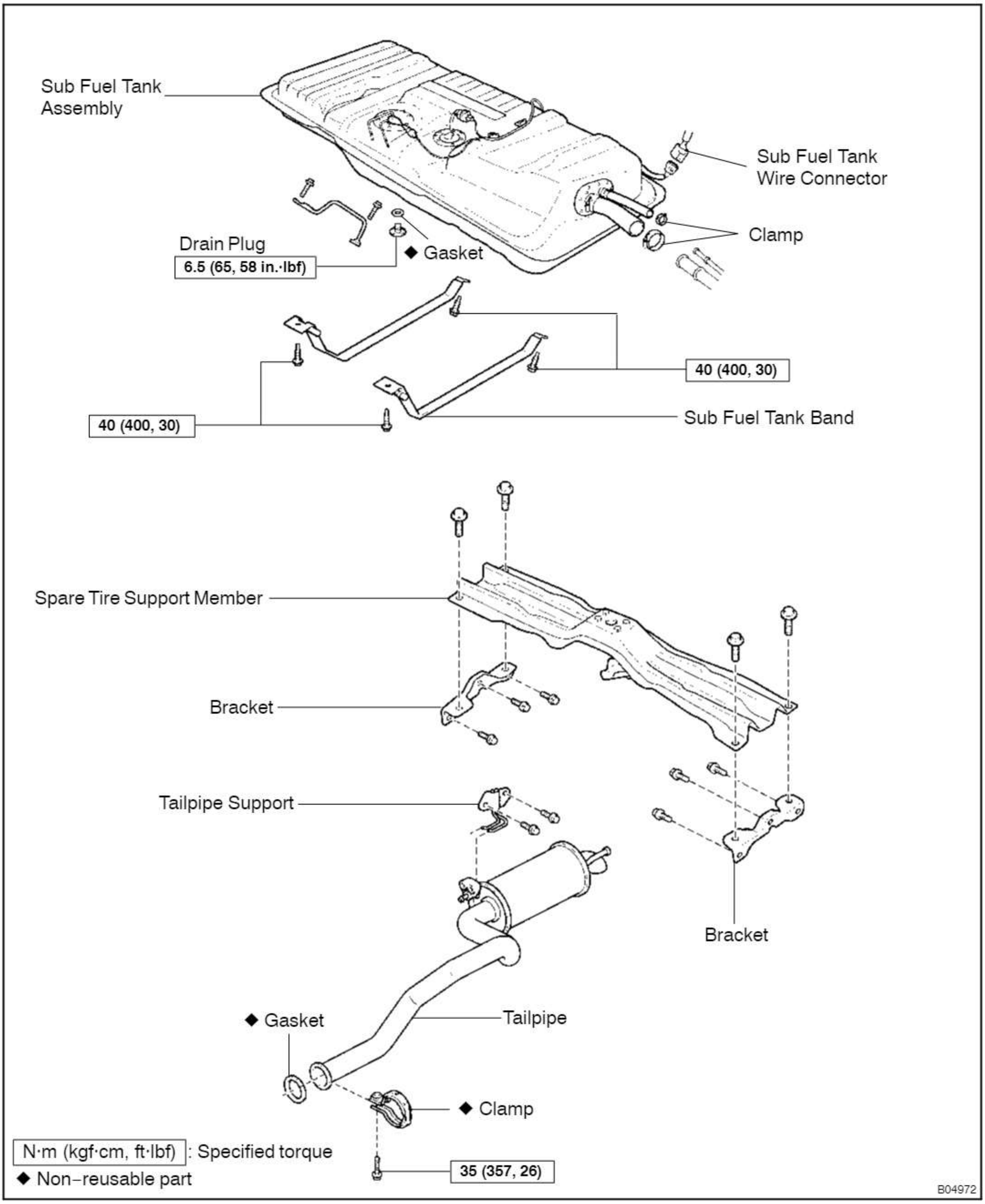
Sub Fuel Tank Assembly
Sub Fuel Tank Wire Connector
Clamp
Drain Plug
6.5 (65, 58 in.·lbf)
◆ Gasket
40 (400, 30)
40 (400, 30)
Sub Fuel Tank Band
Spare Tire Support Member
Bracket
Tailpipe Support
Bracket
◆ Gasket
Tailpipe
◆ Clamp
35 (357, 26)
N·m (kgf·cm, ft·lbf) : Specified torque
◆ Non–reusable part
B04972

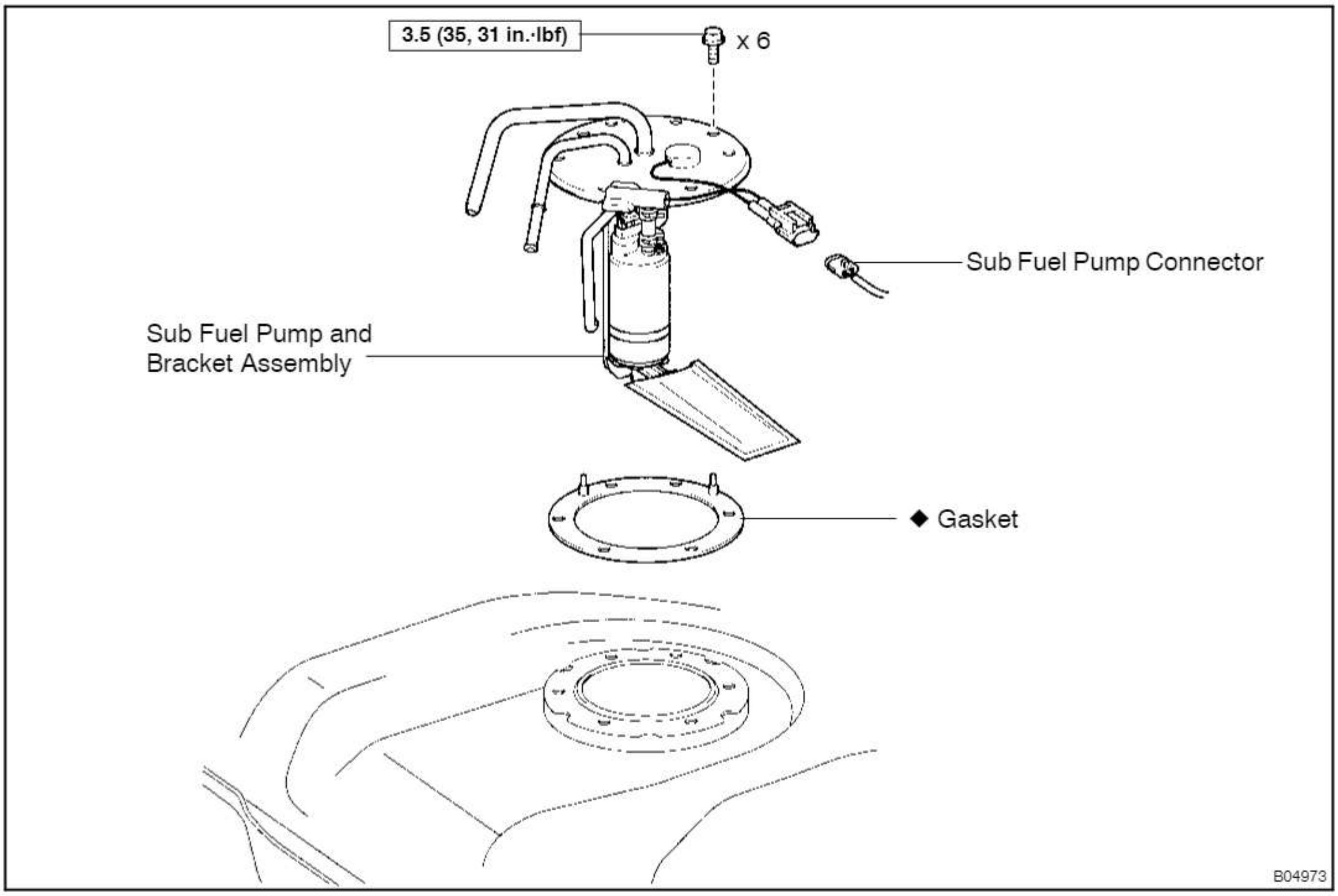
3.5 (35, 31 in.·lbf)
x 6
Sub Fuel Pump Connector
Sub Fuel Pump and Bracket Assembly
◆ Gasket
B04973

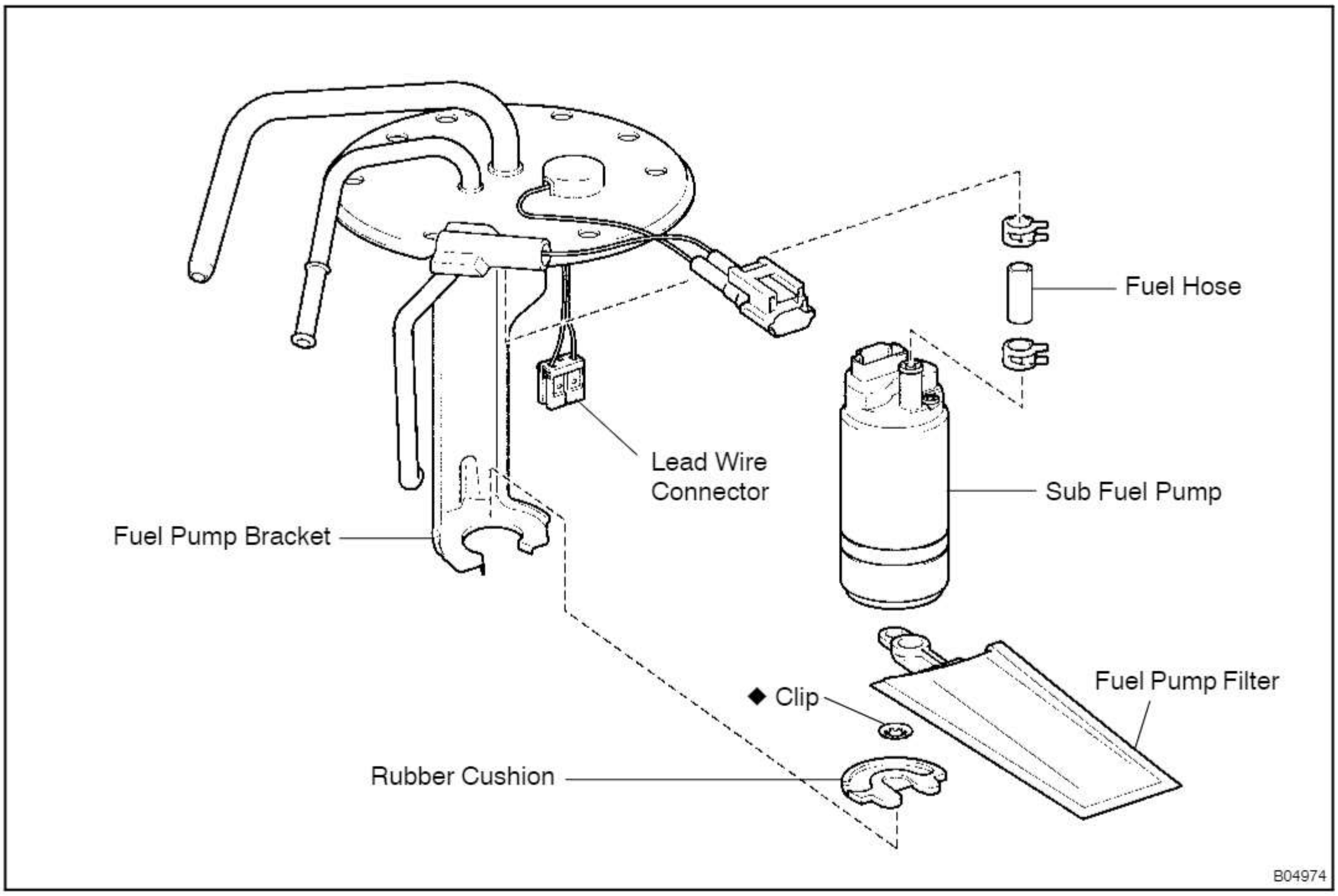
Fuel Hose
Lead Wire Connector
Sub Fuel Pump
Fuel Pump Bracket
Fuel Pump Filter
◆ Clip
Rubber Cushion
B04974

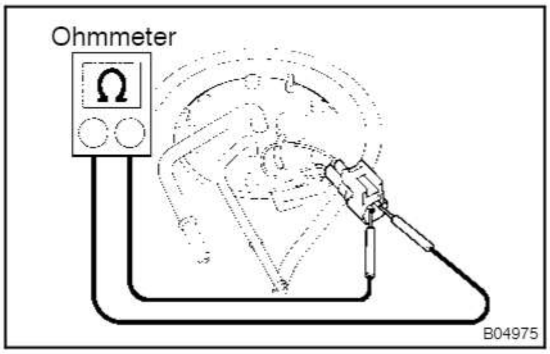

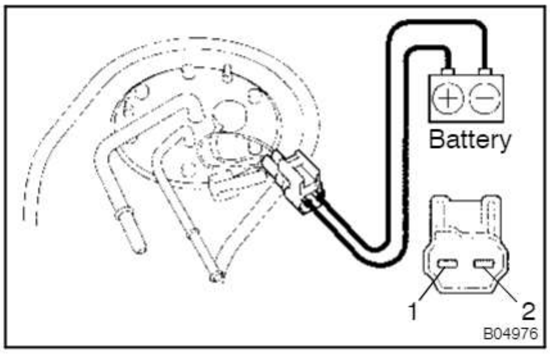

REMOVAL

CAUTION:

Do not smoke or work near an open flame when working on the fuel pump.

1. **REMOVE SUB FUEL TANK FROM VEHICLE**
2. **DISCONNECT SUB FUEL PUMP CONNECTOR**
3. **INSPECT SUB FUEL PUMP RESISTANCE**

Using an ohmmeter, measure the resistance between the terminals.

Resistance: 0.2 – 3.0 Ω at 20°C (68°F)

If the resistance is not as specified, replace the sub fuel pump.

4. **INSPECT SUB FUEL PUMP OPERATION**

Connect a tester lead from terminal 1 of the connector to the positive (+) terminal of the battery: connect another tester lead from terminal 2 of the connector to the negative (–) terminal of the battery.

NOTICE:

- **These tests must be performed quickly (within 10 seconds) to prevent the coil from burning out.**
- **Keep the fuel pump as far away from the battery as possible.**
- **Always connect or disconnect at the battery.**

If operation is not as specified, replace the sub fuel pump.

5. **REMOVE SUB FUEL PUMP AND BRACKET ASSEMBLY FROM SUB FUEL TANK**

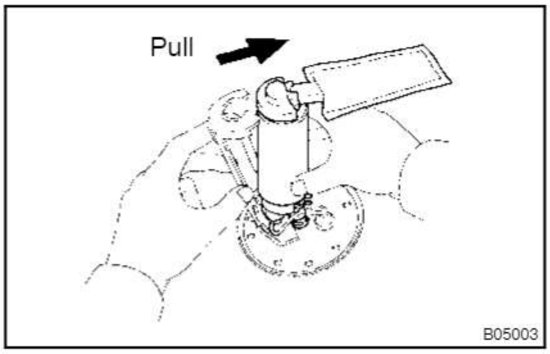

6. **REMOVE SUB FUEL PUMP FROM PUMP BRACKET**

(a) Disconnect the lead wire connector from the sub fuel pump.
(b) Pull out the lower side of the sub fuel pump from the pump bracket.
(c) Disconnect the fuel hose from the sub fuel pump, and remove the sub fuel pump.
(d) Remove the rubber cushion from the sub fuel pump.

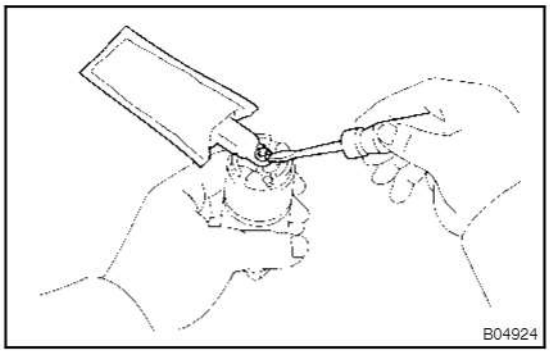

7. **REMOVE FUEL PUMP FILTER FROM SUB FUEL PUMP**

(a) Using a small screwdriver, remove the clip.
(b) Pull out the pump filter.

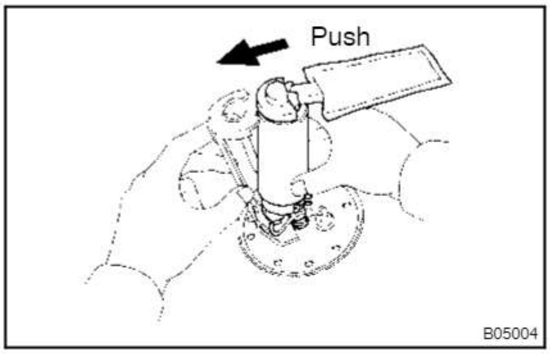

FI0DL–01

INSTALLATION

1. INSTALL FUEL PUMP FILTER TO SUB FUEL PUMP

Install the pump filter with a new clip.

2. INSTALL SUB FUEL PUMP TO FUEL PUMP BRACKET

(a) Install the rubber cushion to the sub fuel pump.
(b) Connect the fuel hose to the outlet port of the sub fuel pump.
(c) Install the sub fuel pump by pushing the lower side of the sub fuel pump.
(d) Connect the lead wire connector to the sub fuel pump.

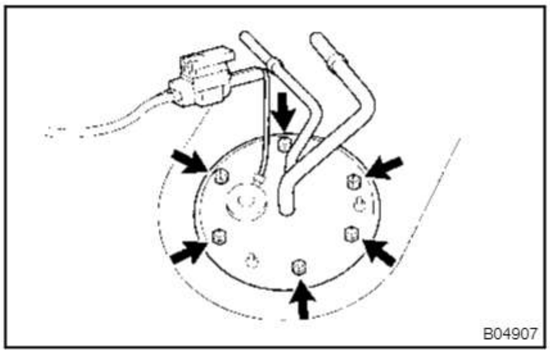

3. INSTALL SUB FUEL PUMP AND BRACKET ASSEMBLY

(a) Install a new gasket to the fuel pump bracket.
(b) Attach the sub fuel pump and bracket assembly to the sub fuel tank.
(c) Install the fuel pump bracket with the 6 bolts.
Torque: 3.5 N·m (35 kgf·cm, 31 in.·lbf)

4. CONNECT SUB FUEL PUMP CONNECTOR

5. INSTALL SUB FUEL TANK TO VEHICLE

6. CHECK FOR FUEL LEAKS (See page FI–1)

FUEL PRESSURE REGULATOR

COMPONENTS

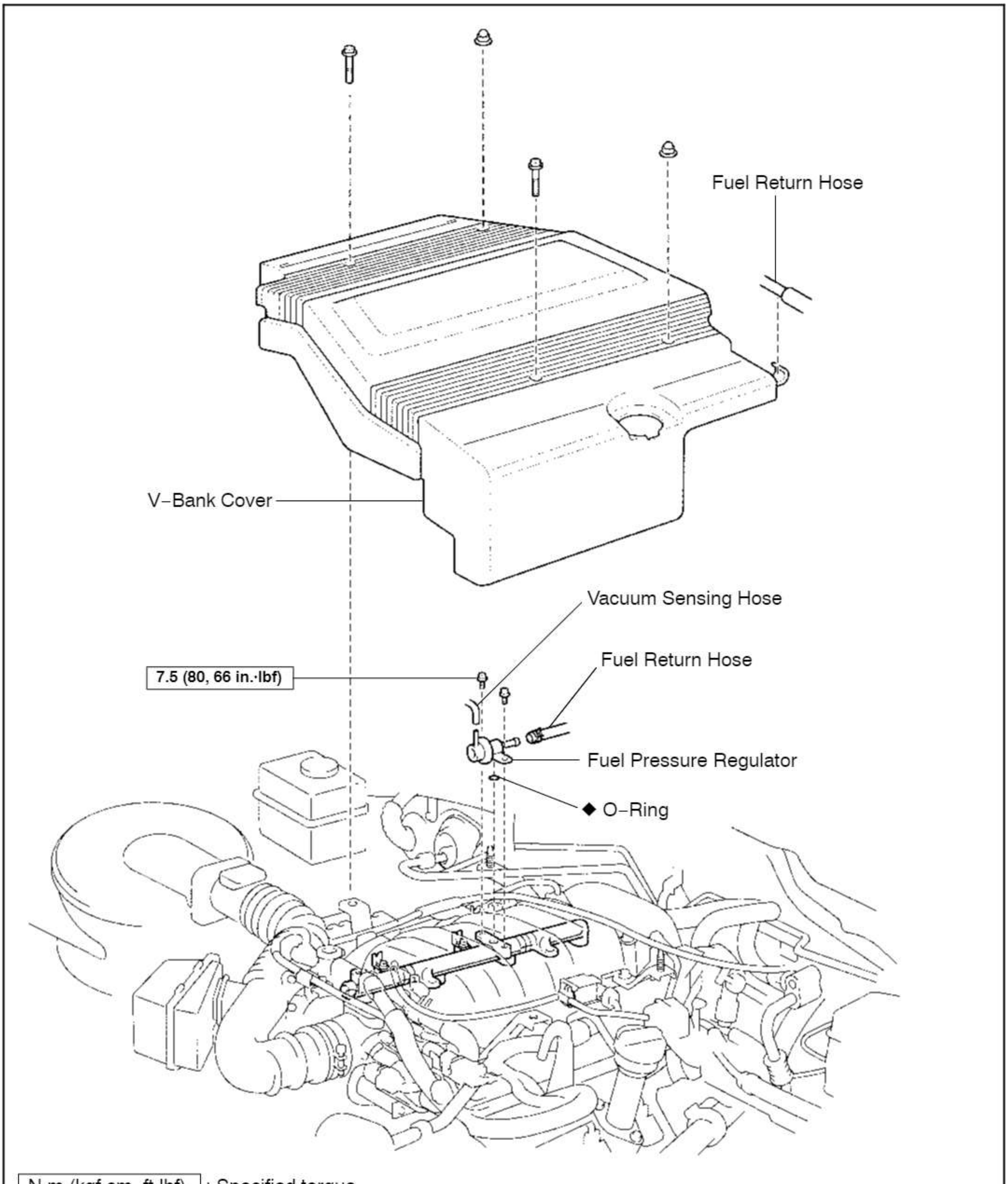

N·m (kgf·cm, ft·lbf) : Specified torque

◆ Non–reusable part

B05227

REMOVAL

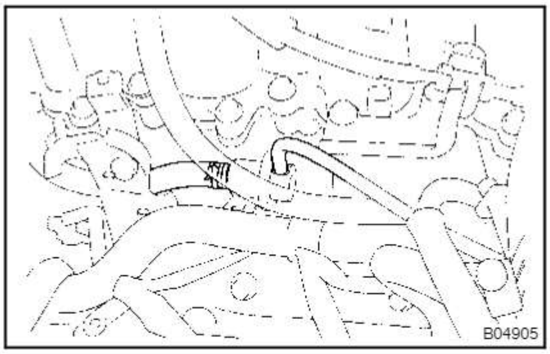

1. **REMOVE V–BANK COVER**
2. **REMOVE FUEL PRESSURE REGULATOR**

(a) Disconnect these hoses from the pressure regulator:
- Vacuum sensing hose from intake air resonator
- Fuel return hose

CAUTION:

Put a shop towel under the pressure regulator.

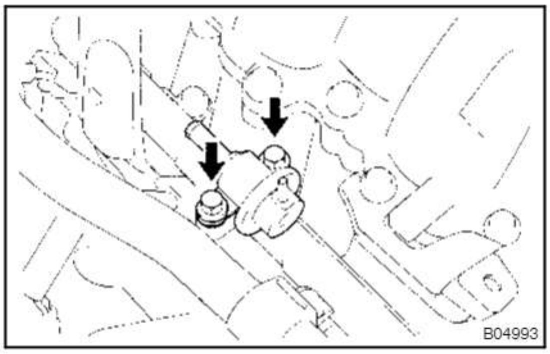

(b) Remove the 2 bolts, and pull out the pressure regulator.

(c) Remove the O–ring from the pressure regulator.

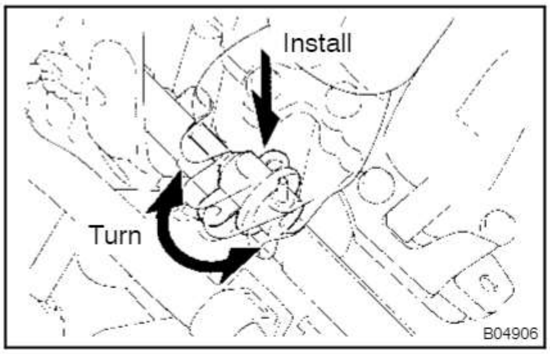

INSTALLATION

1. INSTALL FUEL PRESSURE REGULATOR

(a) Apply a light coat of gasoline to a new O–ring, and install it to the pressure regulator.

(b) While turning the pressure regulator left and right, install it to the delivery pipe.

(c) Install the pressure regulator with the 2 bolts.

Torque: 7.5 N·m (80 kgf·cm, 66 in.·lbf)

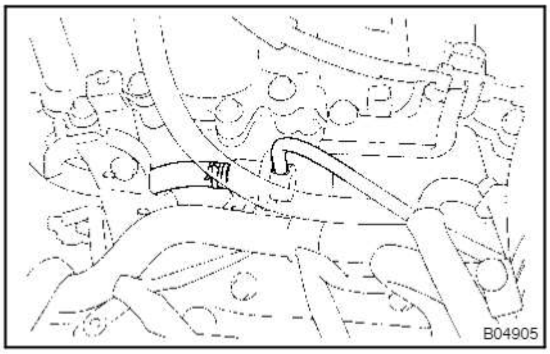

(d) Connect these hoses to the pressure regulator:

- Vacuum sensing hose to intake air resonator
- Fuel return hose

2. CHECK FOR FUEL LEAKS (See page FI–1)

3. INSTALL V–BANK COVER

INJECTOR

ON–VEHICLE INSPECTION

FI0DP–01

1. **REMOVE V–BANK COVER**
2. **REMOVE INTAKE AIR CONNECTOR**

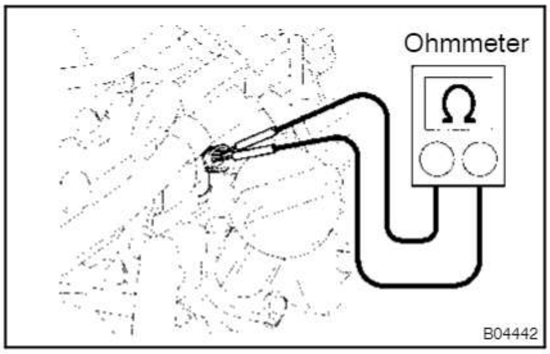

3. **INSPECT INJECTOR RESISTANCE**

(a) Disconnect the 8 injector connectors.

(b) Using an ohmmeter, measure the resistance between the terminals.

Resistance: 13.4 – 14.2 Ω at 20°C (68°F)

If the resistance is not as specified, replace the injector.

(c) Reconnect the 8 injector connectors.

4. **REINSTALL INTAKE AIR CONNECTOR**
5. **REINSTALL V–BANK COVER**

FI0DQ–01

COMPONENTS

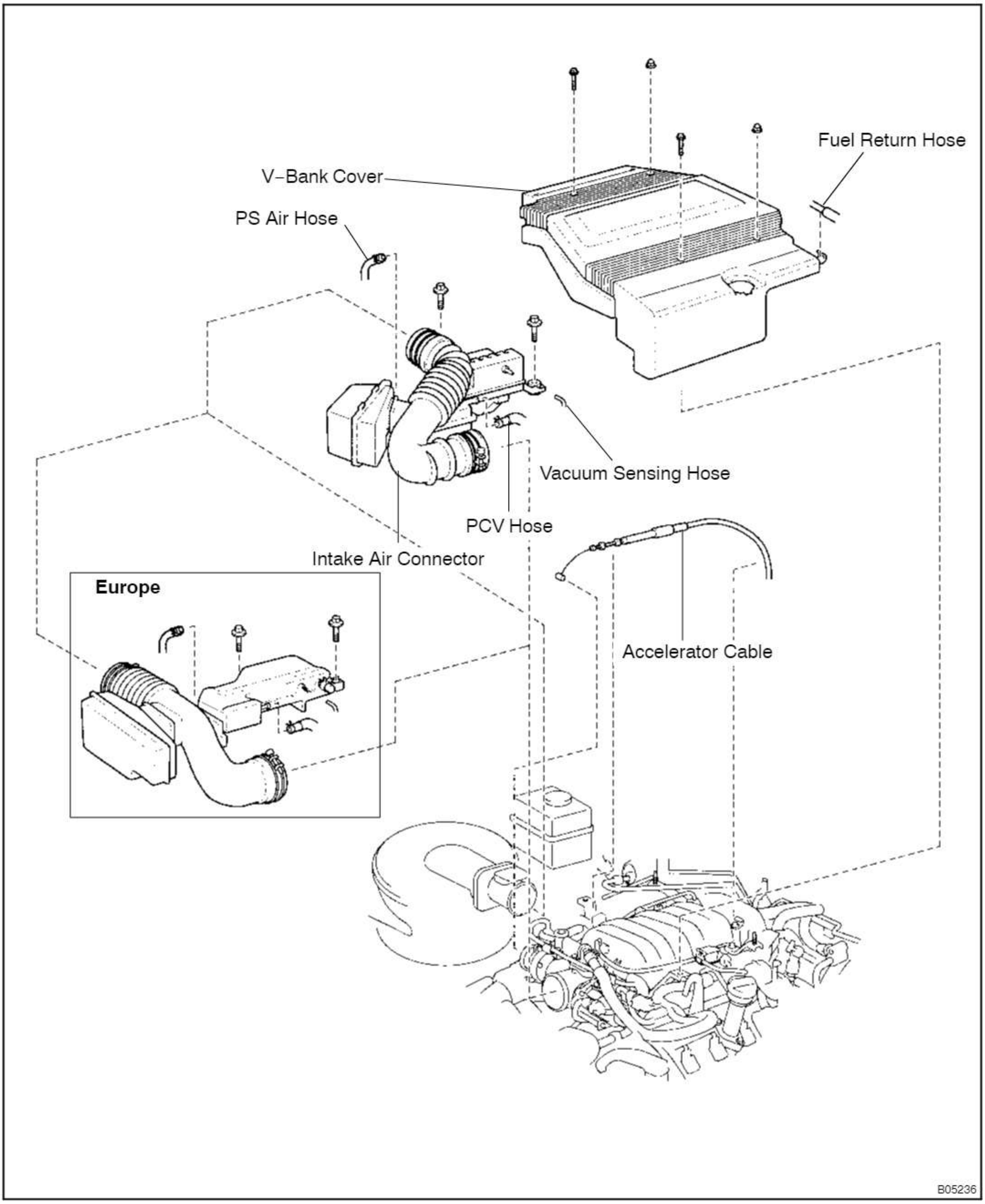

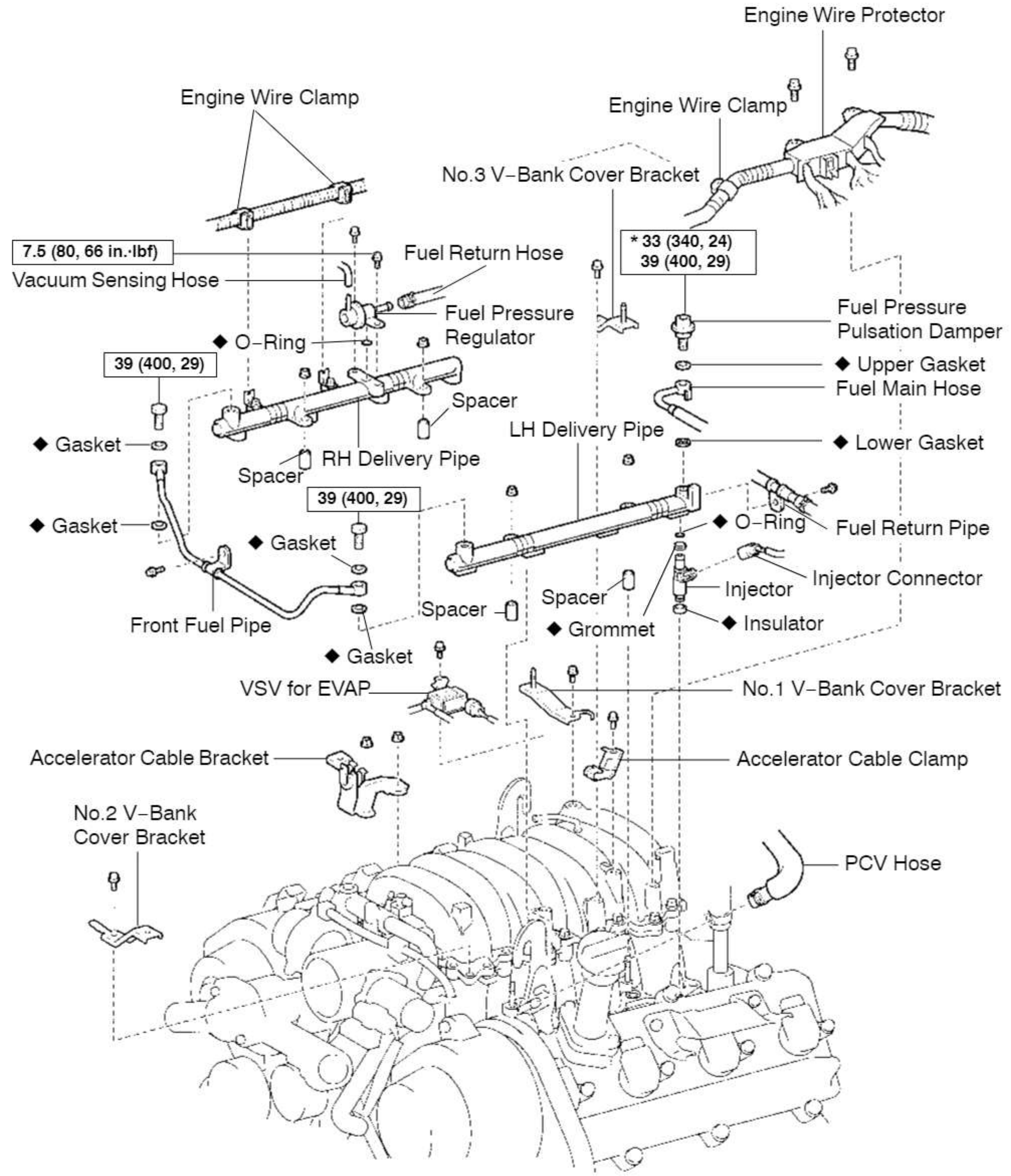

N·m (kgf·cm, ft·lbf) : Specified torque
◆ Non–reusable part
* For use with SST

B05231

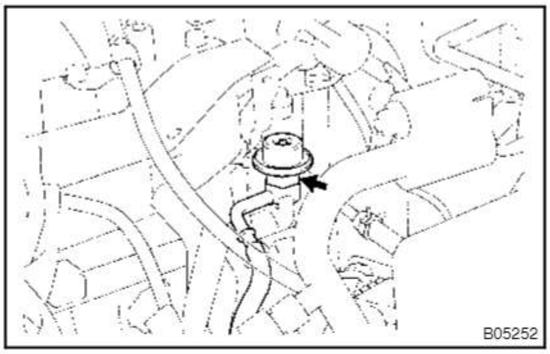

FI0DR–01

REMOVAL

1. REMOVE V–BANK COVER

2. REMOVE INTAKE AIR CONNECTOR

3. REMOVE FUEL PRESSURE PULSATION DAMPER

Remove the pulsation damper, upper gasket, fuel main hose and lower gasket.

CAUTION:

- **Put a shop towel under the delivery pipe.**
- **Slowly loosen the pulsation damper.**

4. REMOVE ACCELERATOR CABLE BRACKET

(a) Disconnect the accelerator cable from the engine.

(b) Remove the 2 nuts and accelerator cable bracket.

5. DISCONNECT ENGINE WIRE PROTECTOR FROM UPPER INTAKE MANIFOLD

(a) Remove and disconnect these parts:

- PCV hose from PCV valve
- VSV for EVAP from upper intake manifold
- Accelerator cable clamp from upper intake manifold
- No.1 V–bank cover bracket from upper intake manifold
- No.2 V–bank cover bracket from upper intake manifold
- No.3 V–bank cover bracket from upper intake manifold

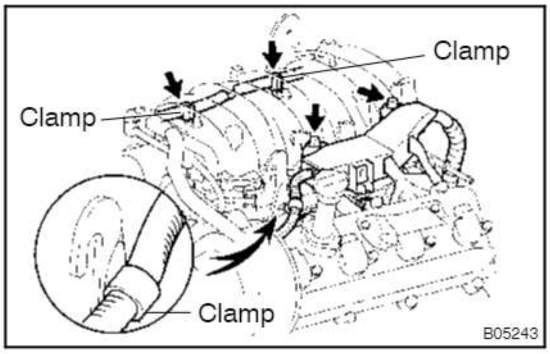

(b) Remove the 2 bolts, and disconnect the engine wire protector from the upper intake manifold.

(c) Disconnect the engine wire clamp from the No.1 engine hanger.

6. DISCONNECT ENGINE WIRE FROM RH DELIVERY PIPE

Disconnect the 2 wire clamps on the engine wire from the brackets on the delivery pipe

7. REMOVE DELIVERY PIPES AND INJECTORS

NOTICE:

- **Be careful not to drop the injectors when removing the delivery pipes.**
- **Pay attention to put any hung load on the injector to and from the side direction.**

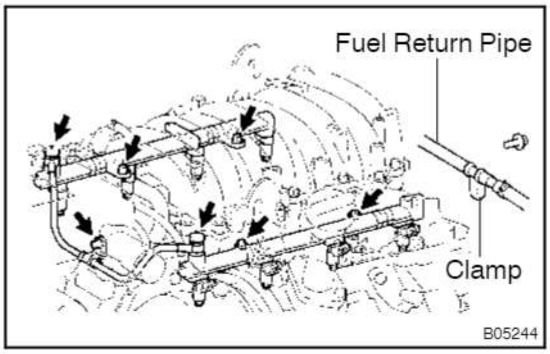

(a) Remove the bolt holding the clamp on the fuel return pipe to the LH delivery pipe.
(b) Remove the bolt, 2 union bolts, 4 gaskets and front fuel pipe.
(c) Disconnect the 8 injector connectors.
(d) Remove the 4 nuts holding the delivery pipes to the lower intake manifold.
(e) Remove the 2 delivery pipes, 8 injectors, 4 spacers and 8 insulators.
(f) Remove the O–ring and grommet from each injector.

SF0Y3–04

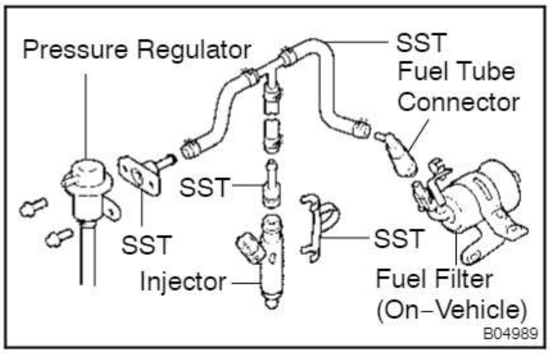

INSPECTION

1. INSPECT INJECTOR INJECTION

CAUTION:

Keep injector clean of sparks during the test.

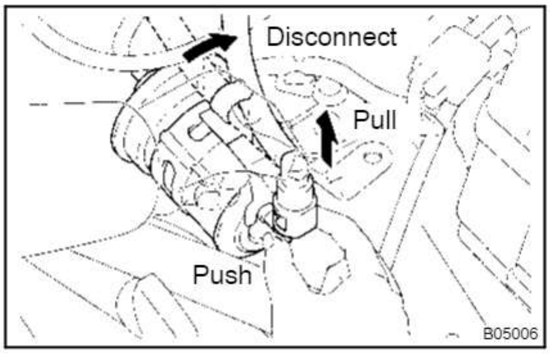

(a) Disconnect the fuel inlet hose (fuel tube connector) from the fuel filter.

CAUTION:

- **Perform disconnecting operations of the fuel tube connector (quick type) after observing the precautions.**
- **As there is retained pressure in the fuel pipe line, prevent it from splashing inside the engine compartment.**

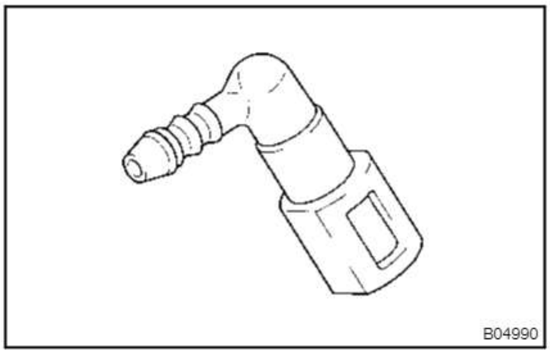

(b) Purchase the new fuel main hose and take out the fuel tube connector from its hose.
Part No. 23271–50150

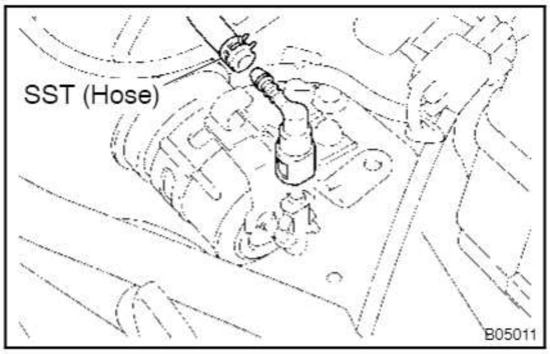

(c) Connect SST (hose) and fuel tube connector to the fuel filter outlet.
SST 09268–41047

CAUTION:

Perform connecting operations of the fuel tube connector (quick type) after observing the precautions.

HINT:

Use the vehicle's fuel filter.

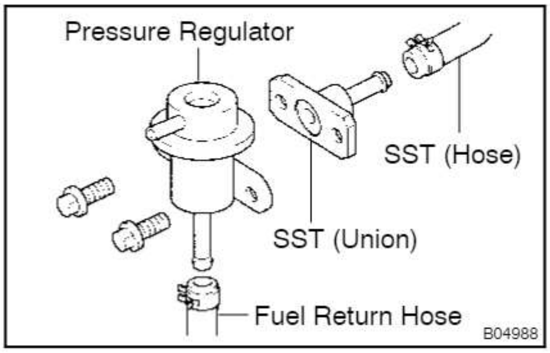

(d) Remove the pressure regulator from the delivery pipe.
(e) Install the O–ring to the fuel inlet of the pressure regulator.
(f) Connect SST (hose) to the fuel inlet of the pressure regulator with SST (union) and the 2 bolts.
SST 09268–41047 (09268–41091)
Torque: 7.5 N·m (80 kgf·cm, 66 in.·lbf)
(g) Connect the fuel return hose to the fuel outlet of the pressure regulator.

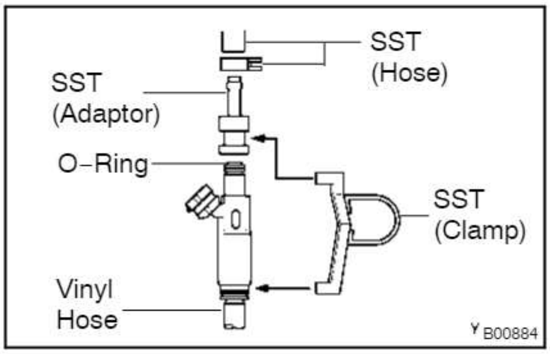

(h) Install the O–ring to the injector.

(i) Connect SST (adaptor and hose) to the injector, and hold the injector and union with SST (clamp).
SST 09268–41047 (09268–41110, 09268–41300)

(j) Put the injector into the graduated cylinder.

CAUTION:

Install a suitable vinyl hose onto the injector to prevent gasoline from splashing out.

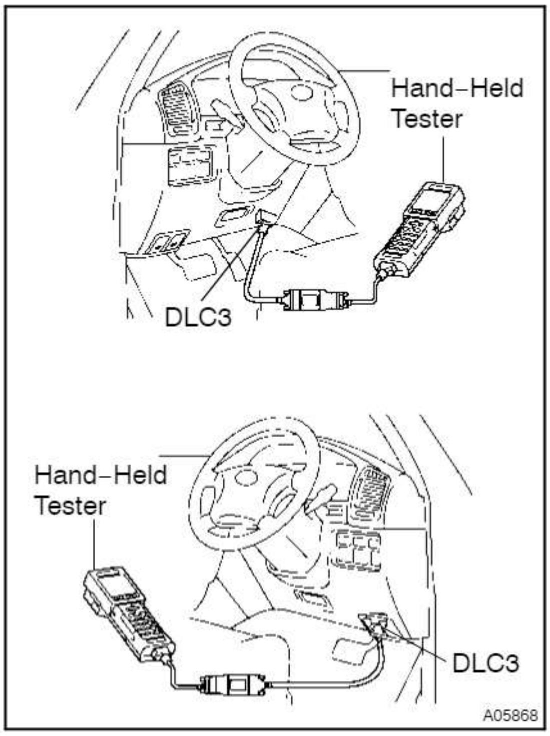

(k) Connect a hand–held tester to the DLC3.

(l) Connect the battery negative (–) cable to the battery.

(m) Turn the ignition switch ON, and push the hand–held tester main switch ON.

NOTICE:

Do not start the engine.

(n) Select the ACTIVE TEST mode on the hand–held tester.

(o) Please refer to the hand–held tester operator's manual for further details.

(p) If you have no hand–held tester, connect the positive (+) and negative (–) leads from the battery to the fuel pump connector. (See page FI–7)

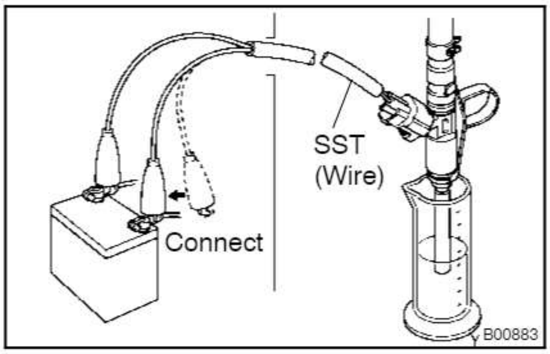

(q) Connect SST (wire) to the injector and battery for 15 seconds, and measure the injection volume with a graduated cylinder. Test each injector 2 or 3 times.
SST 09842–30070
Volume: 56 – 69 cm^3 (3.4 – 4.2 cu in.) per 15 seconds
Difference between each injector:
13 cm^3 (0.8 cu in.) or less

If the injection volume is not as specified, replace the injector.

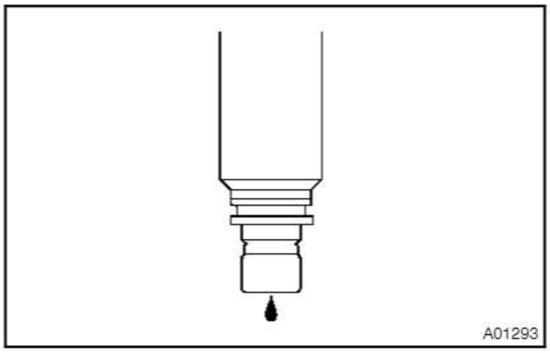

2. INSPECT LEAKAGE

(a) In the condition above, disconnect the tester probes of SST (wire) from the battery and check the fuel leakage from the injector.
SST 09842–30070
Fuel drop: 1 drop or less per 12 minutes

(b) Turn the ignition switch OFF.

(c) Disconnect the negative (–) terminal cable from the battery.

(d) Remove the SST and fuel tube connector.
SST 09268–41047, 09842–30070

(e) Disconnect the hand–held tester from the DLC3.

(f) Reconnect the fuel inlet pipe (fuel tube connector) to the fuel filter.

CAUTION:

Perform connecting operations of the fuel tube connector (quick type) after observing the precautions.

SF0Y4–04

INSTALLATION

1. INSTALL INJECTORS AND DELIVERY PIPES

NOTICE:

- **Be careful not to drop the injectors when installing the delivery pipes.**
- **Pay attention to put any hung load on the injector to and from the side direction.**

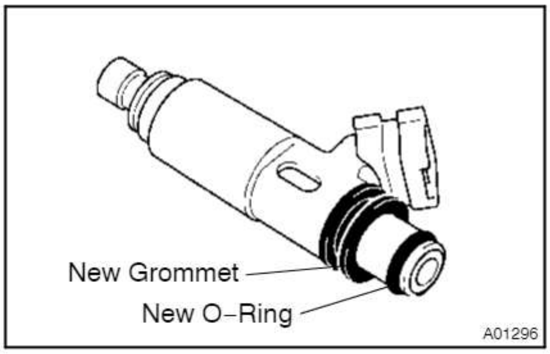

(a) Install a new grommet to each injector.
(b) Apply a light coat of gasoline to a new O–rings and install it to each injector.

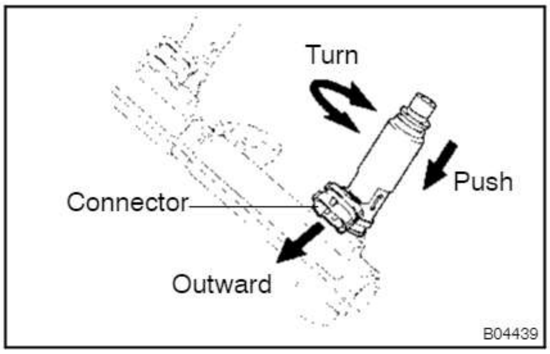

(c) While turning the injector clockwise and counterclockwise, push it to the delivery pipes. Install the 8 injectors.
(d) Position injector connector outward.
(e) Place the 4 spacers and 8 new insulators on the intake manifold.
(f) Place the 2 delivery pipes and injectors assemblies on the lower intake manifold.
(g) Temporarily install the 4 nuts.
(h) Install the front fuel pipe with the bolt, 4 new gaskets and 2 union bolts.
Torque:
39 N·m (400 kgf·cm, 29 ft·lbf) for union bolts
7.5 N·m (80 kgf·cm, 66 in.·lbf) for bolt

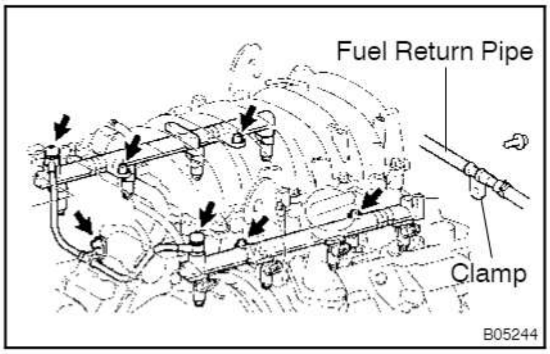

(i) Install the bolt holding the clamp on the fuel return pipe to the LH delivery pipe.
Torque: 7.5 N·m (80 kgf·cm, 66 in.·lbf)

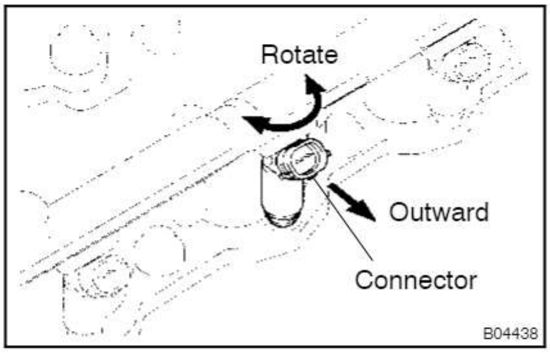

(j) Check that the injectors rotate smoothly.

HINT:

If injectors do not rotate smoothly, the probable cause is incorrect installation of O–rings. Replace the O–rings.

(k) Position injector connector outward.
(l) Tighten the 4 nuts holding the delivery pipes to the lower
(m) intake manifold.
Torque: 18 N·m (185 kgf·cm, 13 ft·lbf)
(n) Connect the 8 injectors connectors.

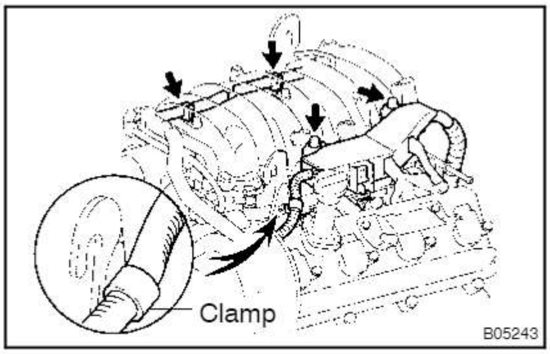

2. INSTALL ENGINE WIRE TO LH DELIVERY PIPE

Install the 2 wire clamps on the engine wire to the brackets on the delivery pipe.

3. INSTALL ENGINE WIRE PROTECTOR

(a) Connect the engine wire clamp to the No.1 engine hanger.

(b) Install the engine wire protector with the 2 bolts.

(c) Install and connect these parts:

- PCV hose to PCV valve
- VSV for EVAP to upper intake manifold
- Accelerator cable clamp to upper intake manifold
- No.1 V–bank cover bracket to upper intake manifold
- No.2 V–bank cover bracket to upper intake manifold
- No.3 V–bank cover bracket to upper intake manifold

4. INSTALL ACCELERATOR CABLE BRACKET

(a) Install the accelerator cable bracket with the 2 nuts.

Torque: 18 N·m (185 kgf·cm, 13 ft·lbf)

(b) Connect the accelerator cable to the engine.

5. INSTALL FUEL PRESSURE PULSATION DAMPER (See page FI–1)

6. INSTALL INTAKE AIR CONNECTOR

7. INSTALL V–BANK COVER

FUEL CONTROL SWITCH (Europe)

SF0Y5–03

COMPONENTS

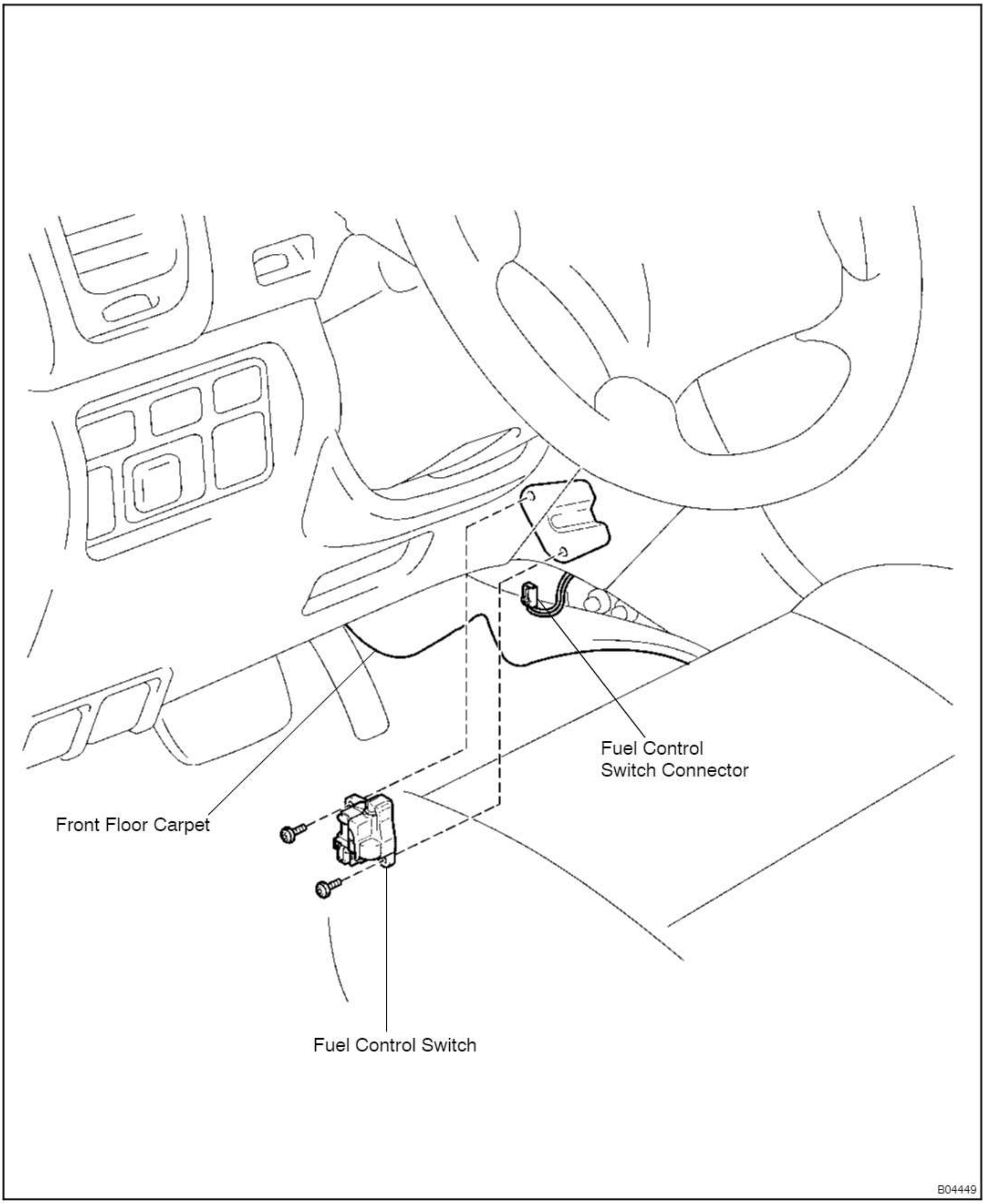

INSPECTION

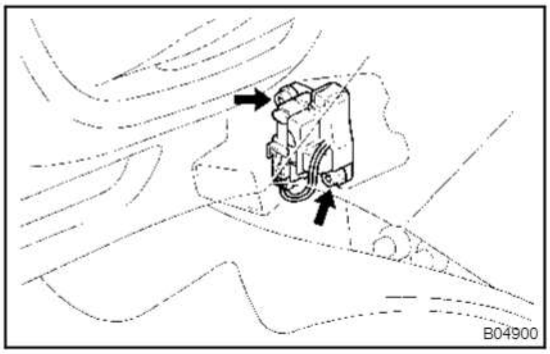

1. DISCONNECT FUEL CONTROL SWITCH CONNECTOR

Take off the front floor carpet, and disconnect the connector.

2. REMOVE FUEL CONTROL SWITCH

Using a torx driver (T30), remove the 2 bolts and switch.

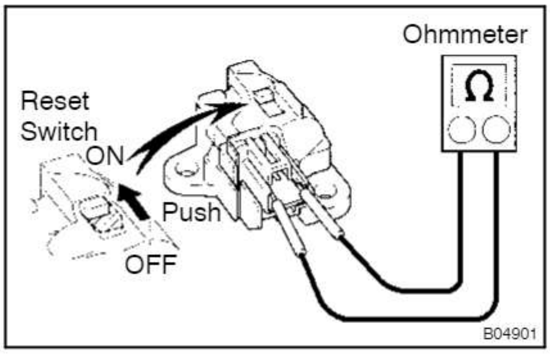

3. INSPECT FUEL CONTROL SWITCH

(a) Check that there is no continuity between terminals with the reset switch OFF.

(b) Check that there is continuity between terminals with the reset switch ON.

If operation is not as specified, replace the switch.

4. REINSTALL FUEL CONTROL SWITCH

NOTICE:

Check that the reset switch ON position.

5. RECONNECT FUEL CONTROL SWITCH CONNECTOR

6. CHECK THAT START ENGINE

FUEL TANK CHANGEOVER SWITCH (w/ Sub Fuel Tank)

FI0DS–01

COMPONENTS

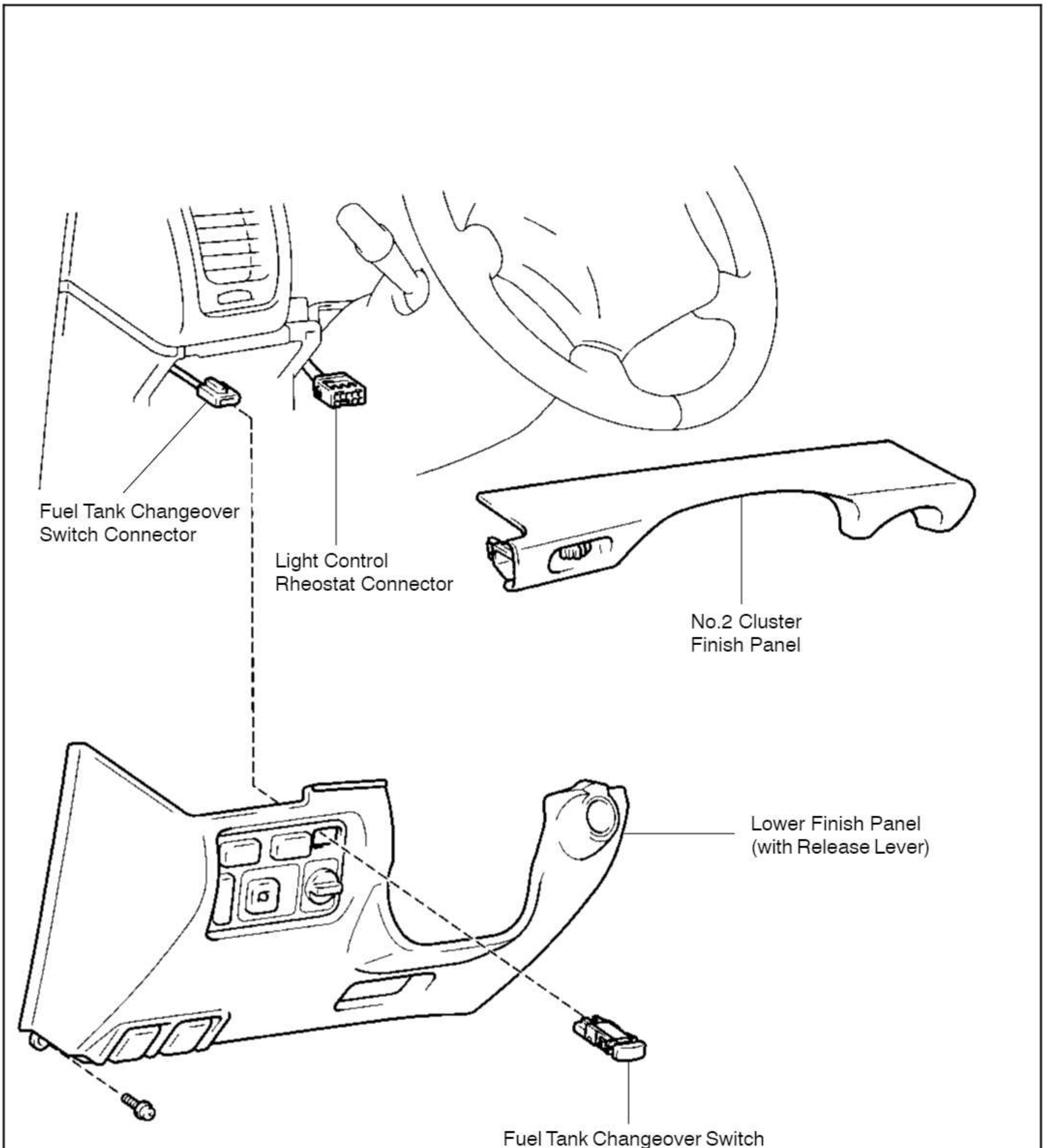

FI0DT–01

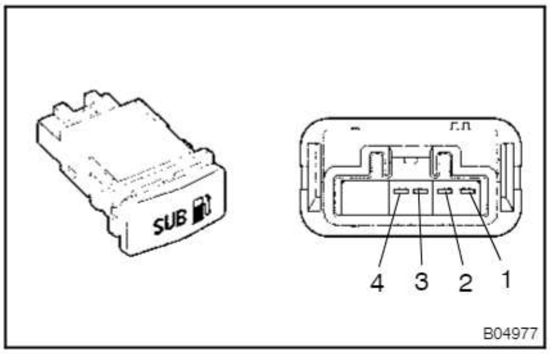

INSPECTION

1. REMOVE FUEL TANK CHANGEOVER SWITCH

2. INSPECT CHANGEOVER SWITCH CONTINUITY

Switch position	Tester connection	Specified condition
OFF	3 – 4	No continuity
ON	3 – 4	Continuity
Illumination circuit	1 – 2	Continuity

If continuity is not as specified, replace the switch.

3. REINSTALL FUEL TANK CHANGEOVER SWITCH

AIR FLOW METER

COMPONENTS

FI0DU–01

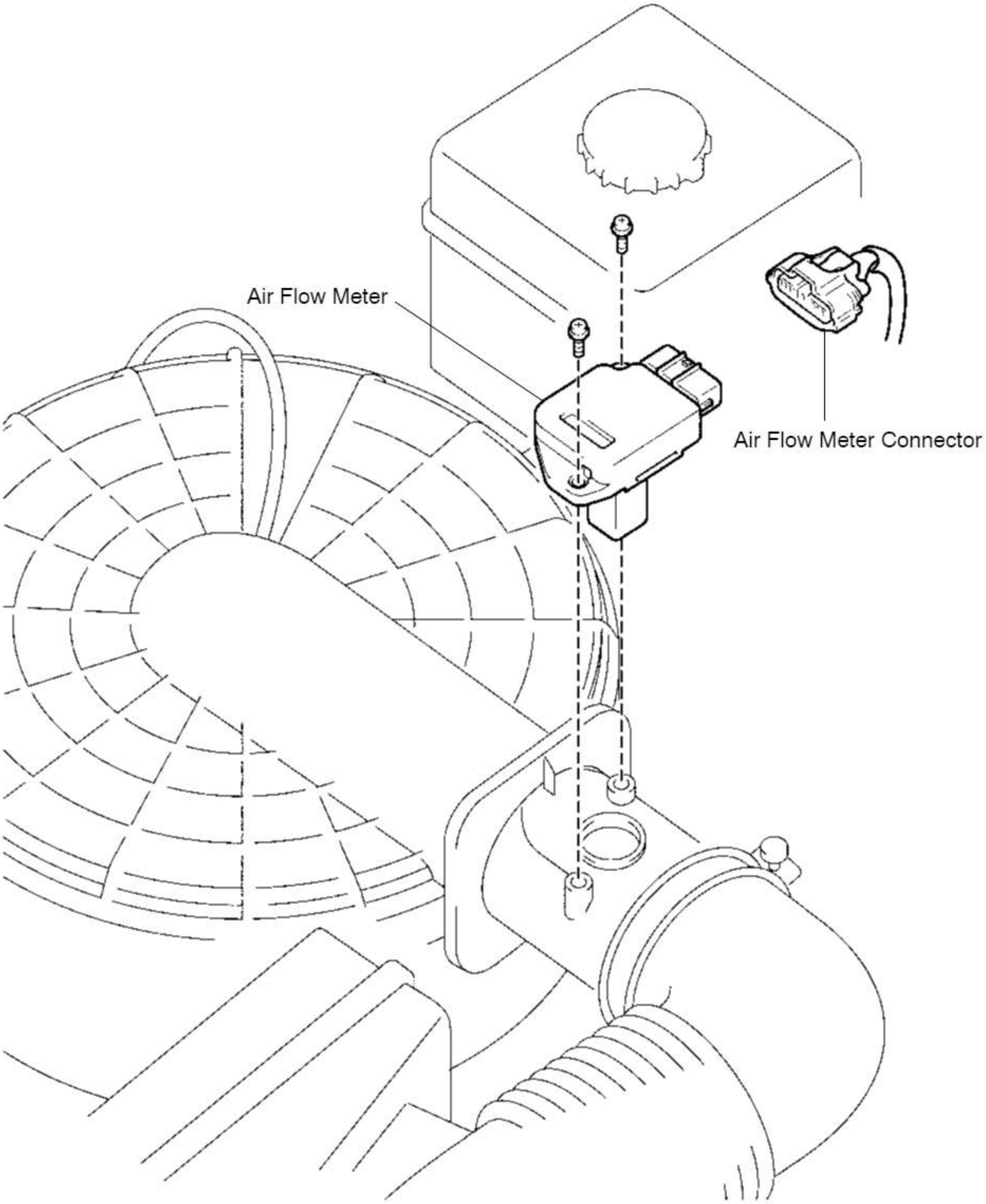

B05019

FI0DV–01

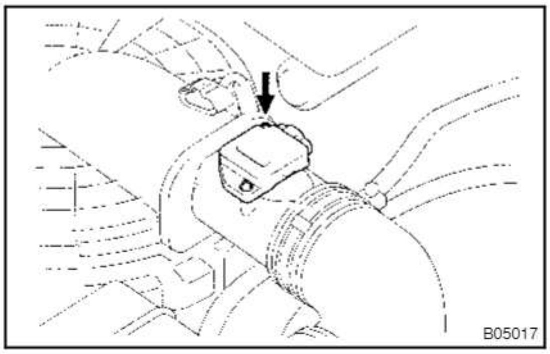

INSPECTION

1. DISCONNECT AIR FLOW METER CONNECTOR

2. REMOVE AIR FLOW METER

Remove the 2 screws and MAF meter.

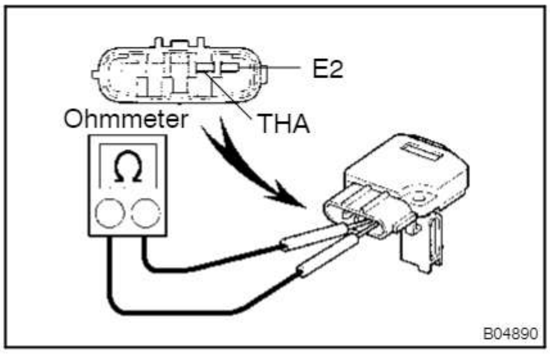

3. INSPECT AIR FLOW METER

(a) Using an ohmmeter, measure the resistance between terminals THA and E2.

Terminals	Resistance	Temperature
THA – E2	12.5 – 16.9 kΩ	–20°C (–4°F)
THA – E2	2.19 – 2.67 kΩ	20°C (68°F)
THA – E2	0.50 – 0.68 kΩ	60°C (140°F)

If the resistance is not as specified, replace the air flow meter.

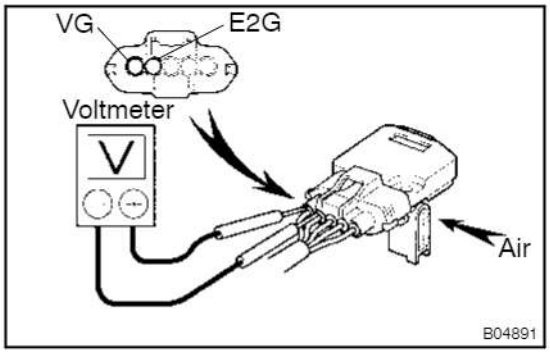

(b) Inspect for operation.

- (1) Connect the air flow meter connector.
- (2) Connect the negative (–) terminal cable to the battery.
- (3) Turn the ignition switch ON.
- (4) Using a voltmeter, connect the positive (+) tester probe to terminal VG, and negative (–) tester probe to terminal E2G.
- (5) Blow air into the air flow meter, and check that the voltage fluctuates.

If operation is not as specified, replace the air flow meter.

- (6) Turn the ignition switch OFF.
- (7) Disconnect the negative (–) terminal cable from the battery.
- (8) Disconnect the air flow meter connector.

4. REINSTALL AIR FLOW METER

Install the air flow meter with the 2 screws.

5. RECONNECT AIR FLOW METER CONNECTOR

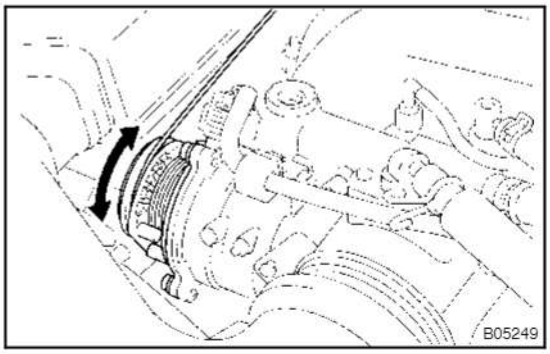

THROTTLE BODY

ON–VEHICLE INSPECTION

1. REMOVE V–BANK COVER

2. INSPECT SYSTEM OPERATION

(a) Check that the throttle linkage moves smoothly.

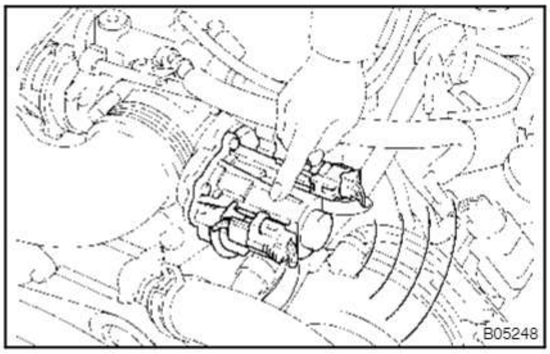

(b) Inspect the throttle control motor for operating sound.
  (1) Turn the ignition switch ON.
  (2) When turning the accelerator pedal position sensor lever, check the running sound of the motor. Also, check that there is no friction sound.

If operation is not as specified, check the throttle control motor (See step 3), wiring and engine ECU.

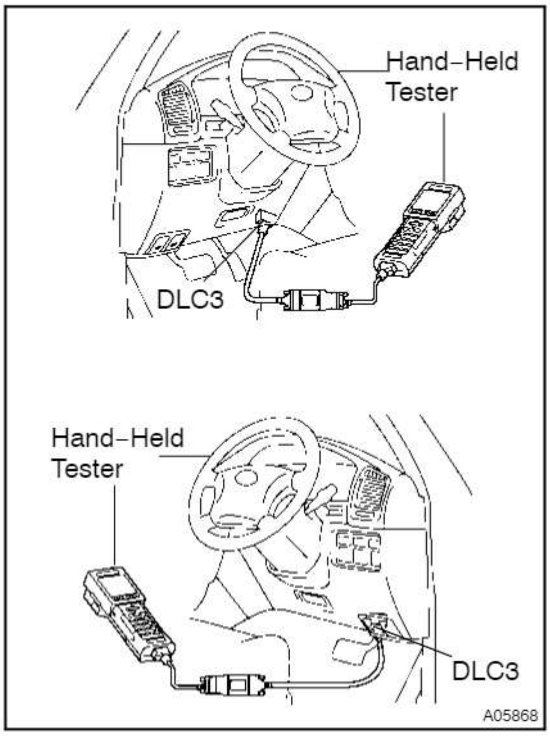

(c) Inspect the accelerator pedal position sensor.
  (1) Connect the hand–held tester to the DLC3.
  (2) Check that the check engine waring light does not light up.
  (3) When turning the accelerator pedal position sensor lever to the full–open position, check that the throttle valve opening percentage (THROTTLE POS) of the CURRENT DATA showns the standard value.

Standard throttle valve opening percentage:
60 % or more

If operation is not as specified, check that the accelerator pedal position sensor (See step 5), wiring and engine ECU.

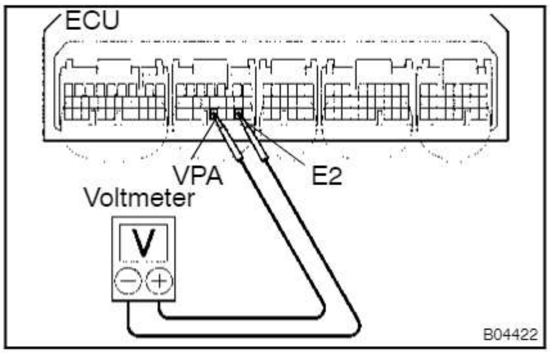

If you have no hand–held tester, measure voltage between terminals VPA and E2 of the engine ECU connector.

(d) Inspect the air assist system.
  (1) Start the engine and check that the check engine waring light does not light up.
  (2) Allow the engine to warm up to normal operating temperature.
  (3) Turn the A/C compressor ON to OFF, and check the idle speed.

Idle speed (Transmission in neutral): 700 ± 50 rpm

NOTICE:

Perform inspection under condition without electrical load.

(e) After checking the above (b) to (d), perform the driving test and check that there is no sense of incongruity.

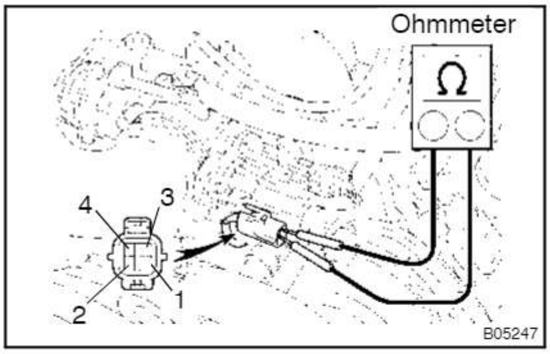

3. INSPECT THROTTLE CONTROL MOTOR

(a) Disconnect the throttle control motor connector.

(b) Using an ohmmeter, measure the motor resistance between terminal 1 (M+) and 2 (M–).

Motor resistance: 0.3 – 100 Ω at 20°C (68°F)

If the resistance is not as specified, replace the throttle control motor. (See page FI–45)

(c) Using an ohmmeter, measure the clutch resistance between terminal 3 (CL–) and 4 (CL+).

Clutch resistance: 4.2 – 5.2 Ω at 20°C (68°F)

If the resistance is not as specified, replace the throttle control motor. (See page FI–45)

(d) Reconnect the throttle control motor connector.

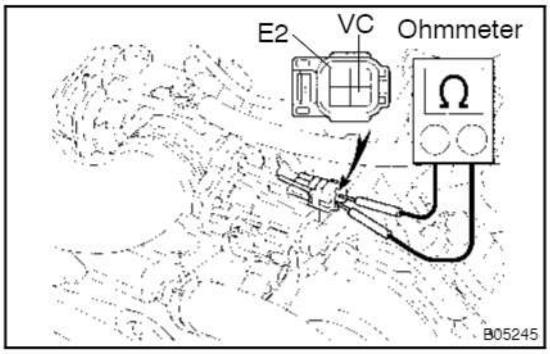

4. INSPECT THROTTLE POSITION SENSOR

(a) Disconnect the throttle position sensor connector.

(b) Using an ohmmeter, measure the resistance between terminals VC and E2.

Resistance: 1.25 – 2.35 kΩ at 20°C (68°F)

If the resistance is not as specified, replace the throttle position sensor. (See page FI–45)

(c) Reconnect the throttle position sensor connector.

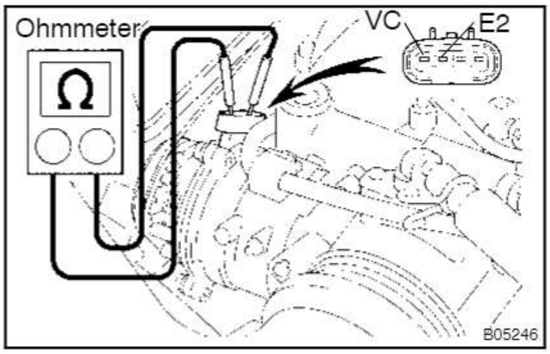

5. INSPECT ACCELERATOR PEDAL POSITION SENSOR

(a) Disconnect the pedal position sensor connector.

(b) Using an ohmmeter, measure the resistance between terminals VC and E2.

Resistance: 1.64 – 3.28 kΩ at 20°C (68°F)

If the resistance is not as specified, replace the accelerator pedal position sensor. (See page FI–45)

(c) Reconnect the pedal position sensor connector.

6. REINSTALL V–BANK COVER

COMPONENTS

FI0DX–01

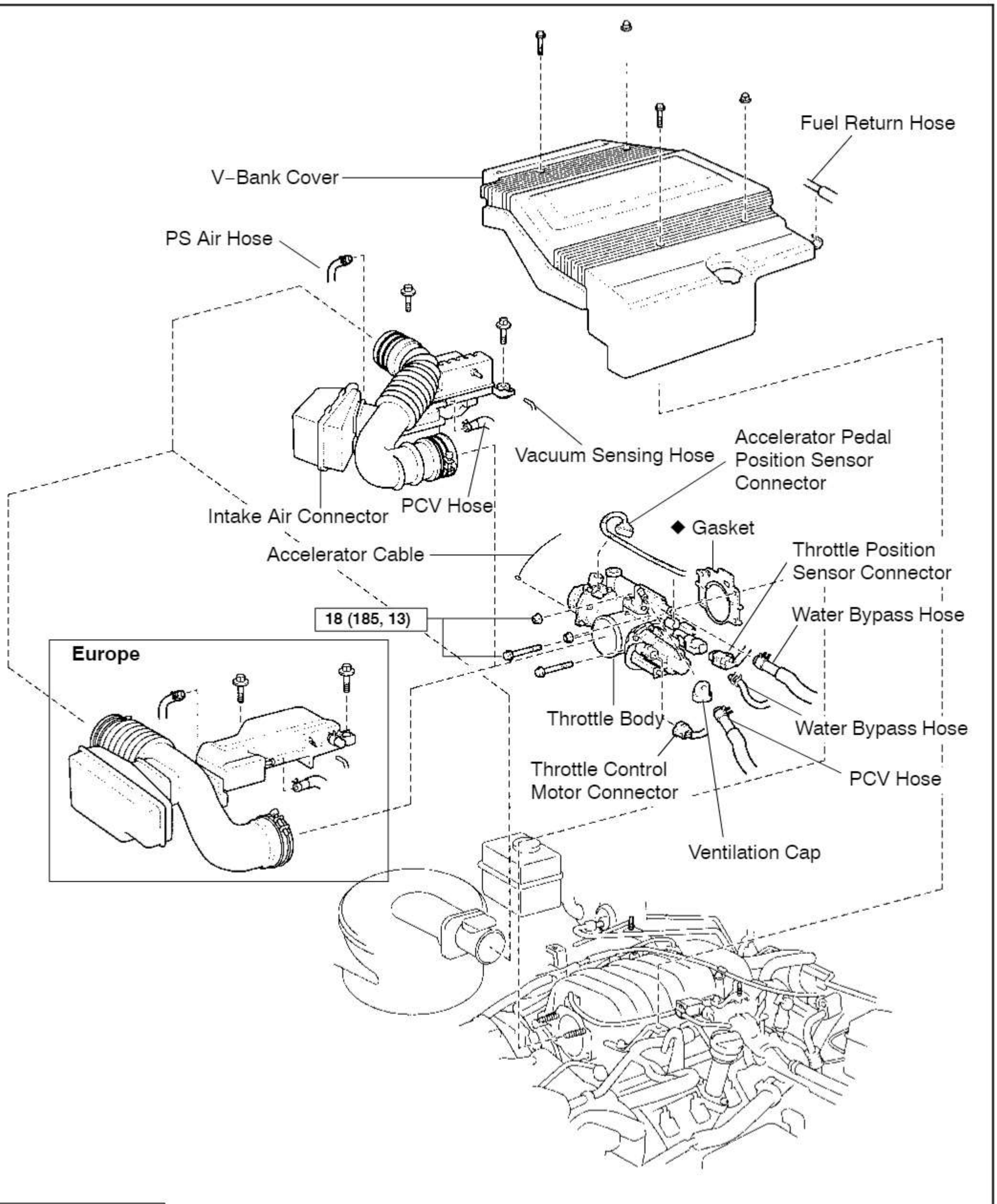

N·m (kgf·cm, ft·lbf) : Specified torque
◆ Non–reusable part

B05237

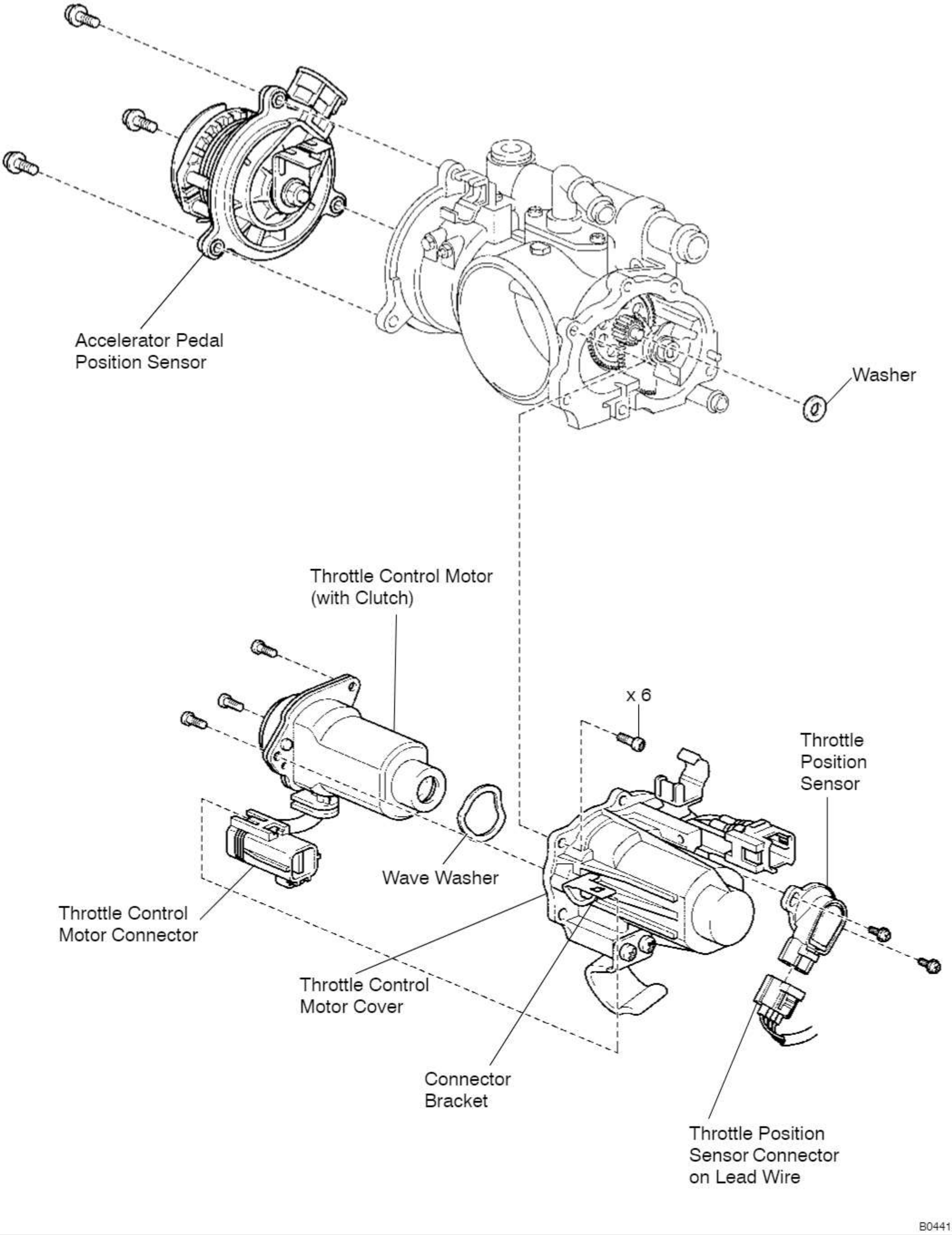
Accelerator Pedal Position Sensor
Washer
Throttle Control Motor (with Clutch)
x 6
Throttle Position Sensor
Wave Washer
Throttle Control Motor Connector
Throttle Control Motor Cover
Connector Bracket
Throttle Position Sensor Connector on Lead Wire
B04413

REMOVAL

1. **REMOVE V–BANK COVER**
2. **DRAIN ENGINE COOLANT**
3. **REMOVE INTAKE AIR CONNECTOR**
4. **DISCONNECT ACCELERATOR CABLE FROM THROTTLE BODY**
5. **REMOVE THROTTLE BODY**

(a) Disconnect the connectors and wire:
- Throttle position sensor connector
- Throttle control motor connector
- Accelerator pedal position sensor connector
- Accelerator pedal position sensor wire from 2 clamps on wire brackets

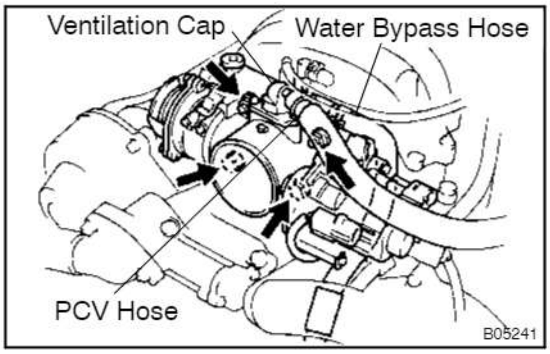

(b) Disconnect the PCV hose and water bypass hose from the throttle body.

(c) Remove the ventilation cap.

(d) Remove the 2 bolts and 2 nuts, and disconnect the throttle body from the intake manifold.

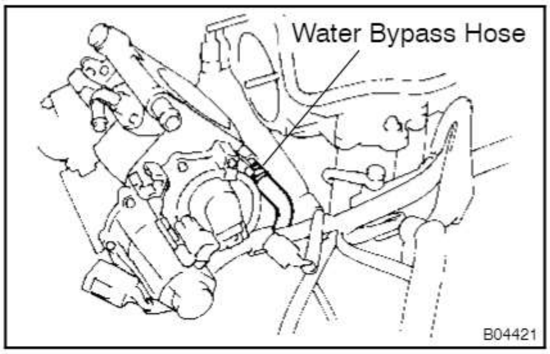

(e) Disconnect the water bypass hose from the manifold thermostat on the throttle body, and remove the throttle body.

(f) Remove the gasket.

FI0DZ-01

REPLACEMENT

NOTICE:

- **To prevent deterioration, do not shock the throttle position sensor and accelerator pedal position sensor.**
- **Mixing of the foreign objects may cause the gear locking, so thoroughly check that there is no stuck of any foreign objects and clean up if any.**

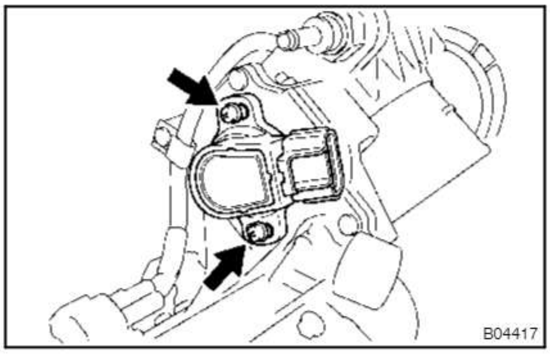
B04417

1. REPLACE THROTTLE POSITION SENSOR

(a) Disconnect the throttle position sensor connector on the lead wire.

(b) Remove the 2 set screws and throttle position sensor.

(c) Reinstall a new throttle position sensor.

(1) Check that the throttle valve is under the condition of the opener opening angle (about 5.5°).

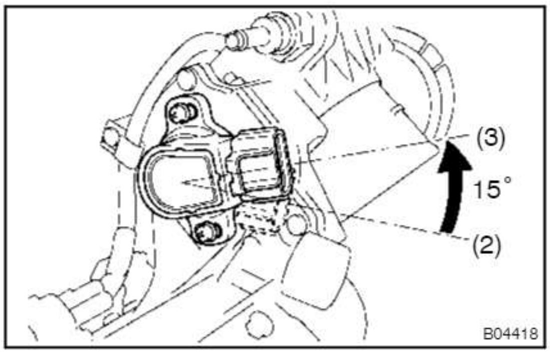

B04418

(2) Install the sensor to the place where is at 15° rotated to the right from the specified installation position.

(3) Gradually turn sensor counterclockwise until it touches the throttle valve shaft, and temporarily tighten the 2 set screws.

(d) Connect the throttle position sensor connector on the lead wire.

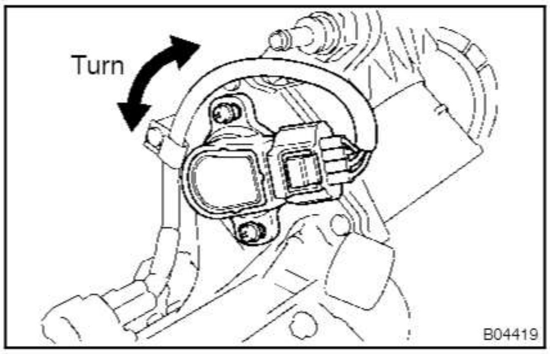

B04419

(e) Adjust the throttle position sensor.

(1) Connect the throttle position sensor connector.

NOTICE:

Do not connect the accelerator pedal position sensor connector.

(2) Connect the hand–held tester or OBDII scan tool to the DLC3.

(3) Turn the ignition switch ON.

NOTICE:

After turning the ignition switch ON, do not depress the accelerator pedal.

(4) While reading the valve of the throttle valve opening percentage (THROTTLE POS) of the CURRENT DATA, turn the throttle position sensor slowly to left and right and set the sensor at the center value of the standard value, and then tighten the screws.

Standard throttle valve opening percentage:
14.4 – 16 %
Torque: 2.0 N·m (20 kgf·cm, 18 in.·lbf)

(5) Recheck throttle valve opening percentage.

If the throttle valve opening percentage is not as specified, repeat step (4).

(6) Perform fully closed throttle valve by hand and check that the valve of the throttle valve opening percentage (THROTTLE POS) of the CURRENT DATA stays with the standard value.

Standard throttle valve opening percentage:
10 – 14 %

If the throttle valve opening percentage is not as specified, repeat steps (4) to (6).

(7) Paint the 2 set screws.
(8) Turn the ignition switch OFF.
(9) Disconnect the hand–held tester or OBDII scan tool from the DLC3.
(10) Disconnect the throttle position sensor connector.

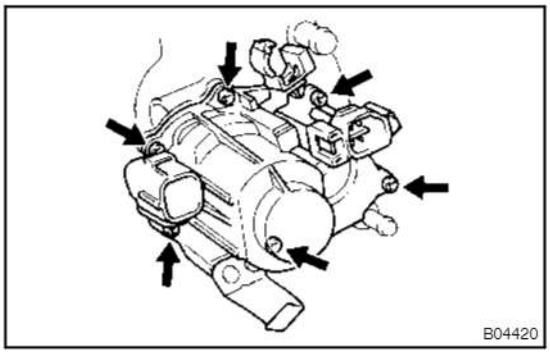

2. REPLACE THROTTLE CONTROL MOTOR

(a) Remove the throttle position sensor. (See step 1)
(b) Remove the throttle control motor.
  (1) Disconnect the throttle control motor connector from the connector bracket.
  (2) Remove the 6 screws, the throttle control motor cover, motor assembly and washer.

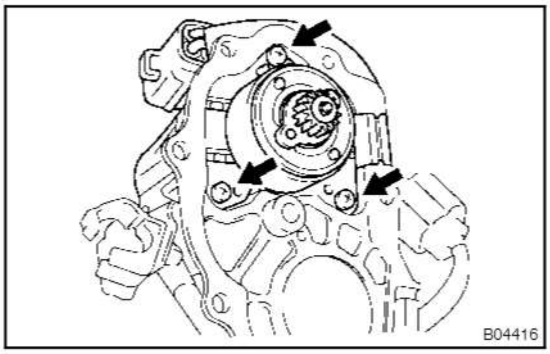

  (3) Remove the 3 screws, throttle control motor and wave washer from the throttle control motor cover.

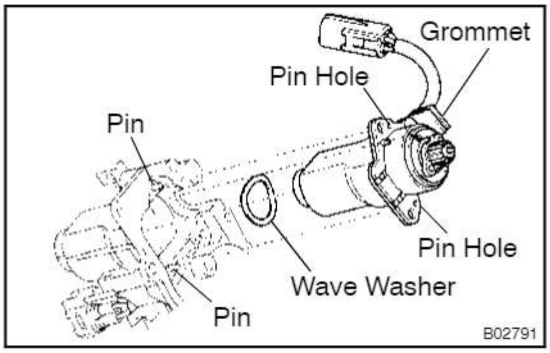

(c) Reinstall a new throttle control motor.
  (1) Insert the wave washer into the throttle control motor cover.
  (2) Align the pin holes of the throttle control motor with the positioning pins of the throttle control motor cover.
  (3) Attach the grommet to the throttle control motor cover.

(4) Install the throttle control motor with the 3 screws.

Torque: 3.4 N·m (35 kgf·cm, 30 in.·lbf)

(5) Apply the grease thinly on the whole surface of the gear teeth.

NOTICE:

Do not apply the grease other than specified because grease has been already applied to the component to be replaced.

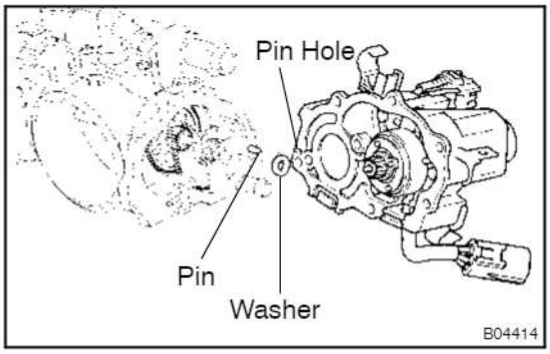

(6) Install the washer as shown in the illustration.

(7) Align the pin hole of the throttle control motor cover with the positioning pin of the throttle body.

(8) Install the throttle control motor cover and motor assembly with the 6 screws.

Torque: 3.4 N·m (35 kgf·cm, 30 in.·lbf)

(9) Connect the throttle control motor connector to the connector bracket.

(d) Reinstall and adjust the throttle position sensor. (See step 1)

3. REPLACE ACCELERATOR PEDAL POSITION SENSOR

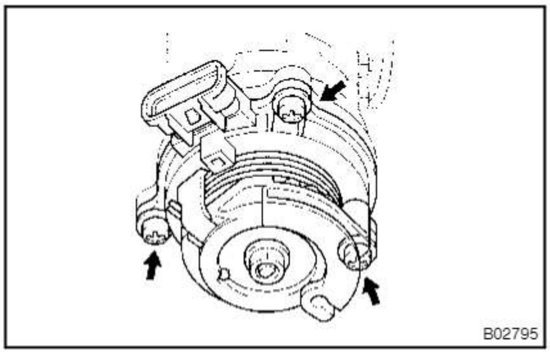

(a) Remove the 3 set screws and accelerator pedal position sensor.

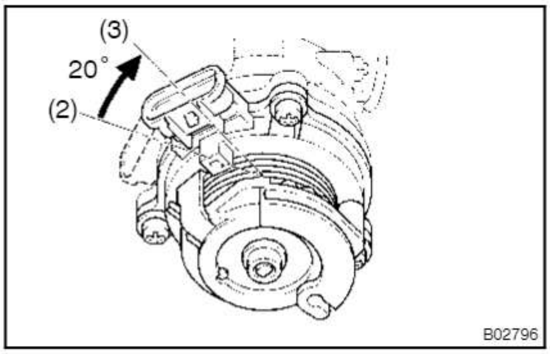

(b) Reinstall a new accelerator pedal position sensor.

(1) Check that the throttle valve is under the condition of the opener opening angle (about 4°).

(2) Install the sensor to the place where is at 20° rotated to the left from the specified installation position.

(3) Gradually turn sensor clockwise until it touches the throttle valve shaft, and tighten the 3 set screws.

Torque: 5.4 N·m (55 kgf·cm, 48 in.·lbf)

(c) Inspect the accelerator pedal position sensor.

(1) Connect the accelerator pedal position sensor connector.

(2) Connect the hand–held tester or OBDII scan tool to the DLC3.

(3) Turn the ignition switch ON.

NOTICE:

After turning the ignition switch ON, do not depress the accelerator pedal.

(4) Check that the ACCEL POS #1 (VPA) voltage of the CURRENT DATA shows the standard value.

Standard accelerator pedal position voltage:
0.35 – 0.85 V

4. **AFTER INSTALL THROTTLE BODY, INSPECT SYSTEM OPERATION (See page FI–40)**

INSTALLATION

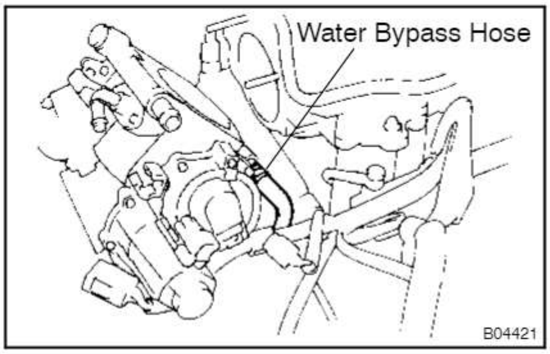

1. INSTALL THROTTLE BODY

(a) Connect the water bypass hose to the manifold thermostat on the throttle body.

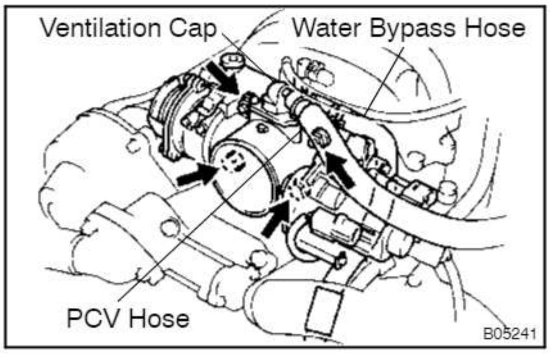

(b) Install a new gasket and the throttle body with the 2 bolts and 2 nuts.

Torque: 18 N·m (185 kgf·cm, 13 ft·lbf)

(c) Install the ventilation cap.

(d) Connect the water bypass hose and PCV hose to the throttle body.

(e) Connect the connectors and wire:

- Throttle position sensor connector
- Throttle control motor connector
- Accelerator pedal position sensor connector
- Accelerator pedal position sensor wire to 2 clamps on wire brackets

2. CONNECT ACCELERATOR CABLE TO THROTTLE BODY

3. INSTALL INTAKE AIR CONNECTOR

4. FILL WITH ENGINE COOLANT (See page CO–2)

5. START ENGINE AND CHECK FOR ENGINE COOLANT LEAKS

6. INSTALL V–BANK COVER

FUEL TANK SOLENOID RETURN VALVE (w/ Sub Fuel Tank)

FI0E1–01

COMPONENTS

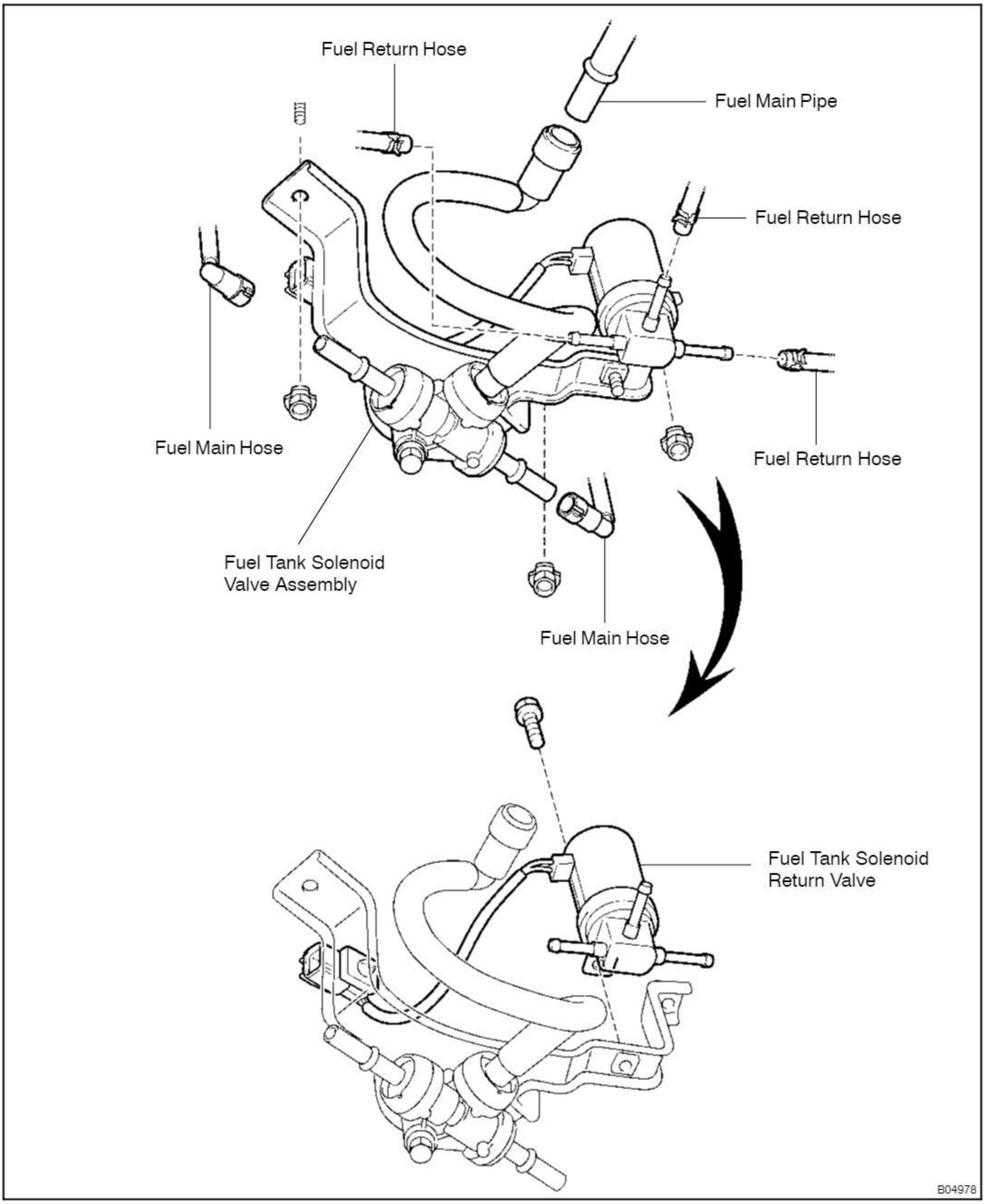

FI0E2–01

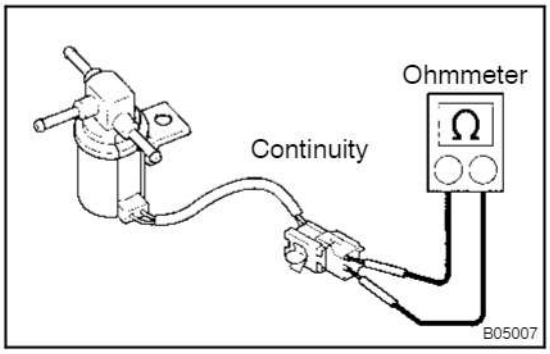

INSPECTION

1. **REMOVE FUEL TANK SOLENOID VALVE ASSEMBLY FROM VEHICLE**
2. **REMOVE FUEL TANK SOLENOID RETURN VALVE**
3. **INSPECT FUEL TANK SOLENOID RETURN VALVE**

(a) Inspect the valve for open circuit.
Using an ohmmeter, check that there is continuity between the terminals.
Resistance: 33 – 39 Ω at 20°C (68°F)

If there is no continuity, replace the valve.

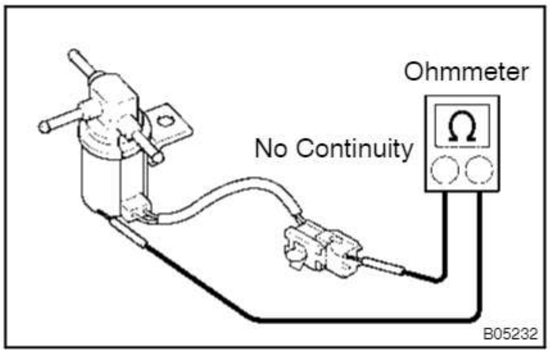

(b) Inspect the valve for ground.
Using an ohmmeter, check that there is no continuity between each terminal and the body.

If there is continuity, replace the valve.

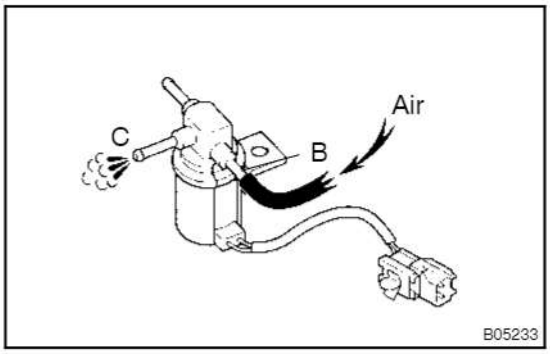

(c) Inspect the valve operation.
  (1) Check that air flows from ports B to C.

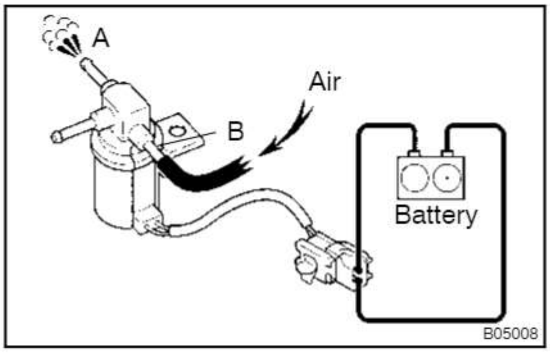

  (2) Apply battery positive voltage across the terminals.
  (3) Check that air flows from ports B to A.

If operation is not as specified, replace the valve.

4. **REINSTALL FUEL TANK SOLENOID RETURN VALVE**
5. **REINSTALL FUEL TANK SOLENOID VALVE ASSEMBLY TO VEHICLE**

EFI MAIN RELAY

INSPECTION

FI0E3–01

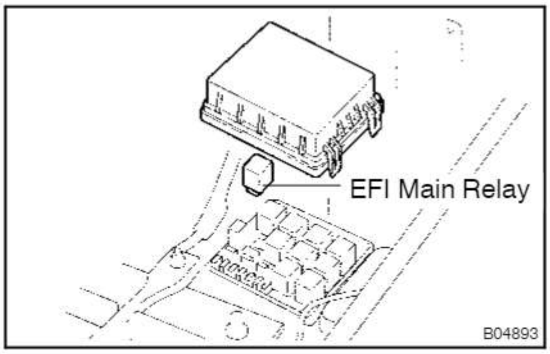

1. **REMOVE RELAY BOX COVER**
2. **REMOVE EFI MAIN RELAY (Marking: EFI)**

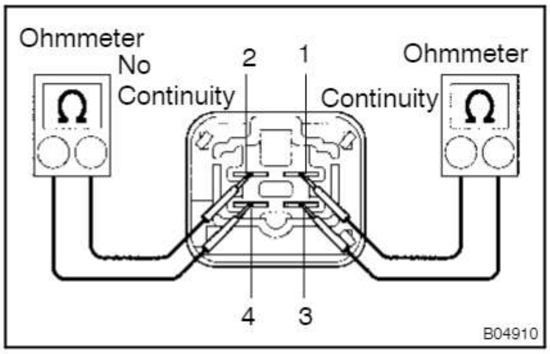

3. **INSPECT EFI MAIN RELAY**

(a) Inspect the relay continuity.

  (1) Using an ohmmeter, check that there is continuity between terminals 1 and 3.

If there is no continuity, replace the relay.

  (2) Check that there is no continuity between terminals 2 and 4.

If there is continuity, replace the relay.

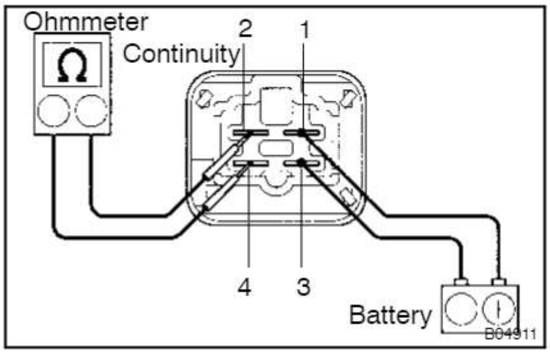

(b) Inspect the relay operation.

  (1) Apply battery positive voltage across terminals 1 and 3.

  (2) Using an ohmmeter, check that there is continuity between terminals 2 and 4.

If there is no continuity, replace the relay.

4. **REINSTALL EFI MAIN RELAY**
5. **REINSTALL RELAY BOX COVER**

CIRCUIT OPENING RELAY (Except Europe)

FI0E4–01

INSPECTION

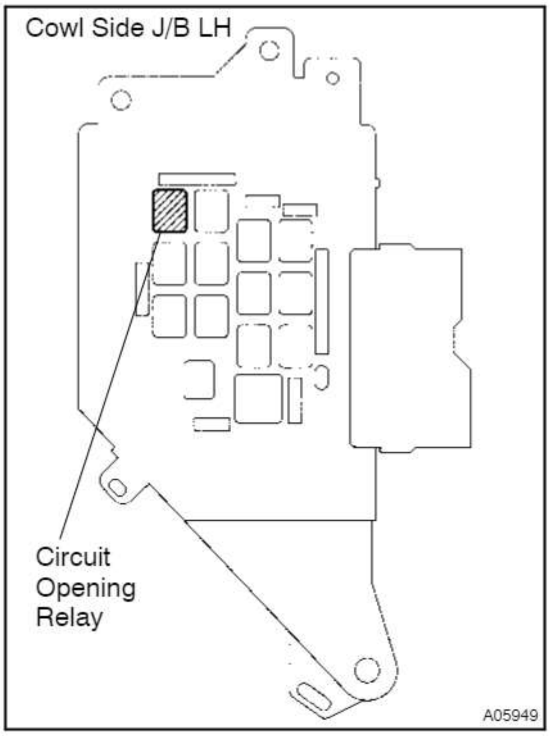

1. **REMOVE CIRCUIT OPENING RELAY (Marking: C/OPN)**

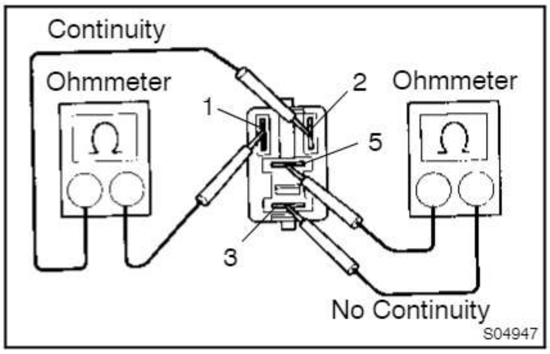

2. **INSPECT CIRCUIT OPENING RELAY**

(a) Inspect the relay continuity.

(1) Using an ohmmeter, check that there is continuity between terminals 1 and 2.

If there is no continuity, replace the relay.

(2) Check that there is no continuity between terminals 3 and 5.

If there is continuity, replace the relay.

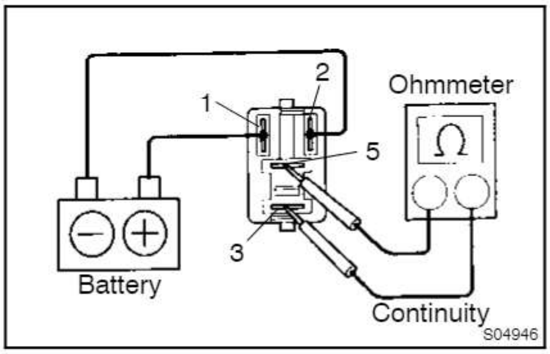

(b) Inspect the relay operation.

(1) Apply battery positive voltage across terminals 1 and 2.

(2) Using an ohmmeter, check that there is continuity between terminals 3 and 5.

If there is no continuity, replace the relay.

3. **REINSTALL CIRCUIT OPENING RELAY**

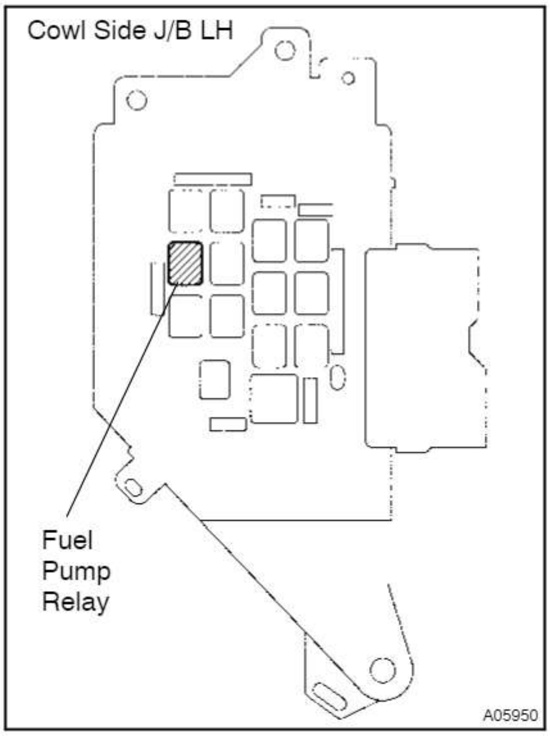

FUEL PUMP RELAY (Except Europe)

INSPECTION

FI0E5–01

1. **REMOVE FUEL PUMP RELAY (Marking: FUEL/PMP)**

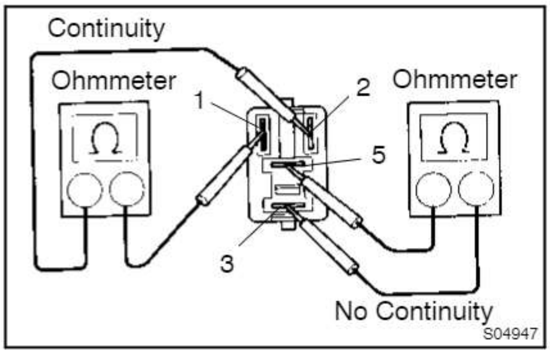

2. **INSPECT FUEL PUMP RELAY**

(a) Inspect the relay continuity.

(1) Using an ohmmeter. check that there is continuity between terminals 1 and 2.

If there is no continuity, replace the relay.

(2) Check that there is no continuity between terminals 3 and 5.

If there is continuity, replace the relay.

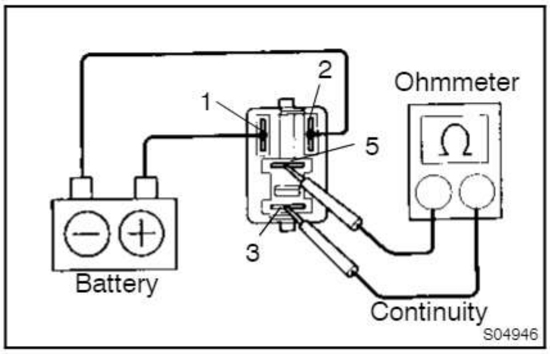

(b) Inspect the relay operation.

(1) Apply battery positive voltage across terminals 1 and 2.

(2) Using an ohmmeter, check that there is continuity between terminals 3 and 5.

If operation is not as specified, replace the relay.

3. **REINSTALL FUEL PUMP RELAY**

FUEL TANK SELECT RELAY (w/ Sub Fuel Tank)

COMPONENTS

FI0E6–01

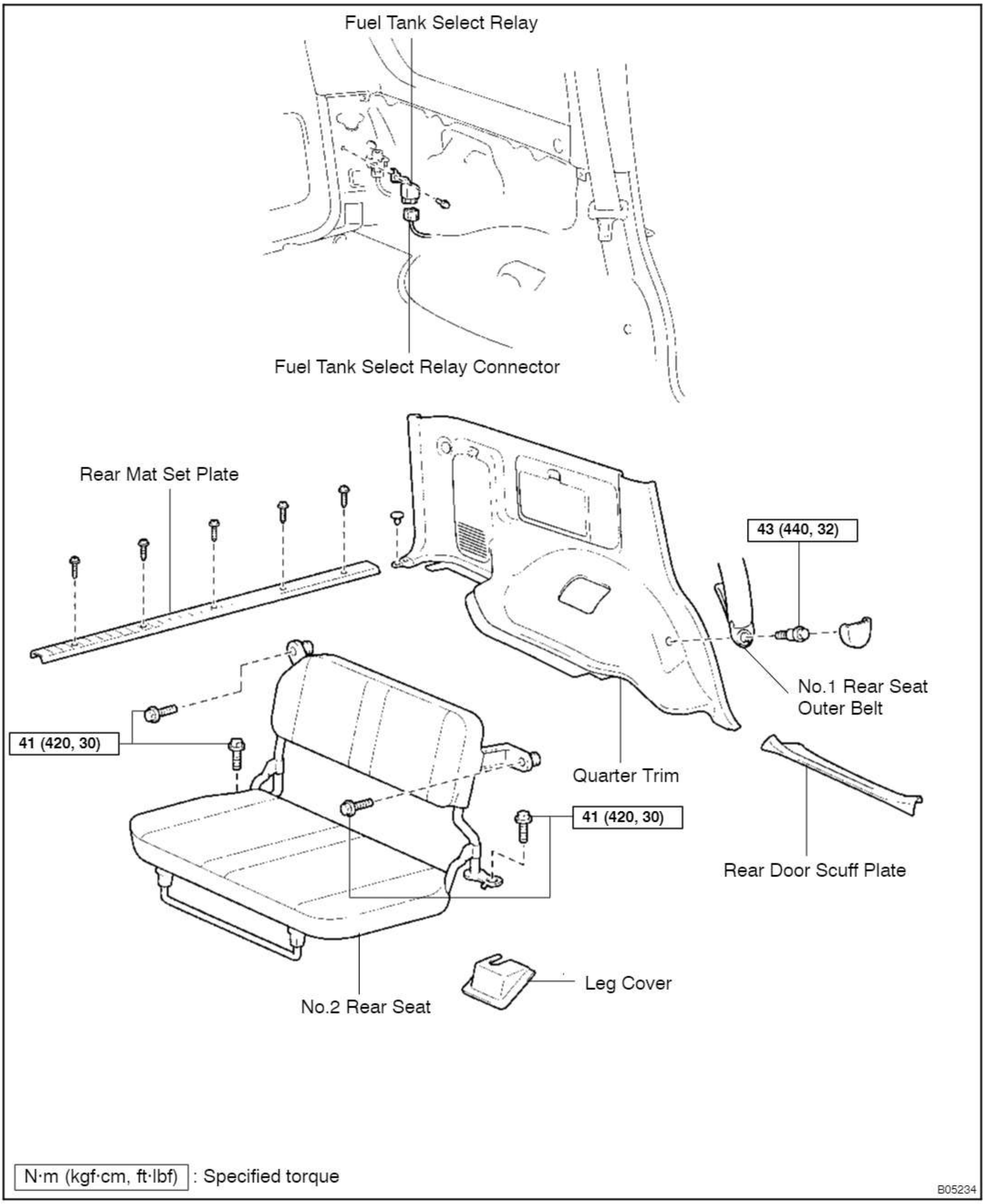

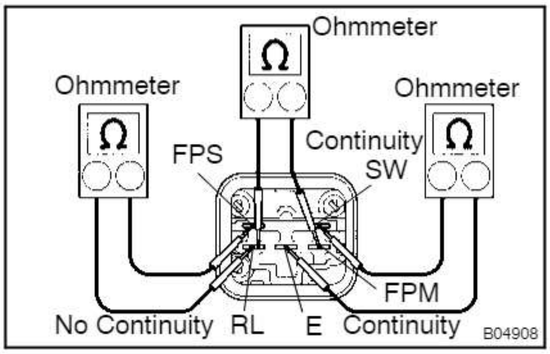

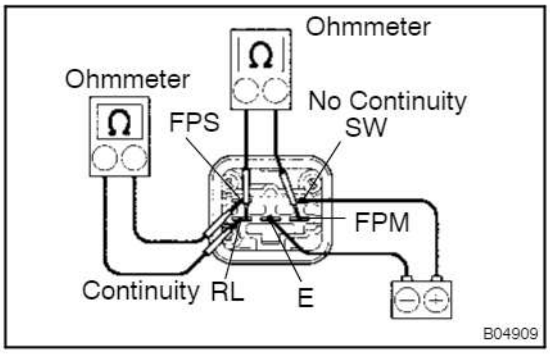

FI0E7–01

INSPECTION

1. **REMOVE FUEL TANK SELECT RELAY**
2. **INSPECT FUEL TANK SELECT RELAY**

(a) Inspect the relay continuity.

(1) Using an ohmmeter. check that there is continuity between terminals SW and E.

(2) Check that there is continuity between terminals RL and FPM.

If there is no continuity, replace the relay.

(3) Check that thee is no continuity between terminals RL and FPS.

If there is continuity, replace the relay.

(b) Inspect the relay operation.

(1) Apply battery positive voltage across terminals SW and E.

(2) Using an ohmmeter, check that there is no continuity between the RL and FPS.

If there is continuity, replace the relay.

(3) Check that there is continuity between terminals RL and FPS.

If there is no continuity, replace the relay.

3. **REINSTALL FUEL TANK SELECT RELAY**

SUB FUEL TANK FORCING DRIVING RELAY (w/ Sub Fuel Tank)

FI0E8–01

COMPONENTS

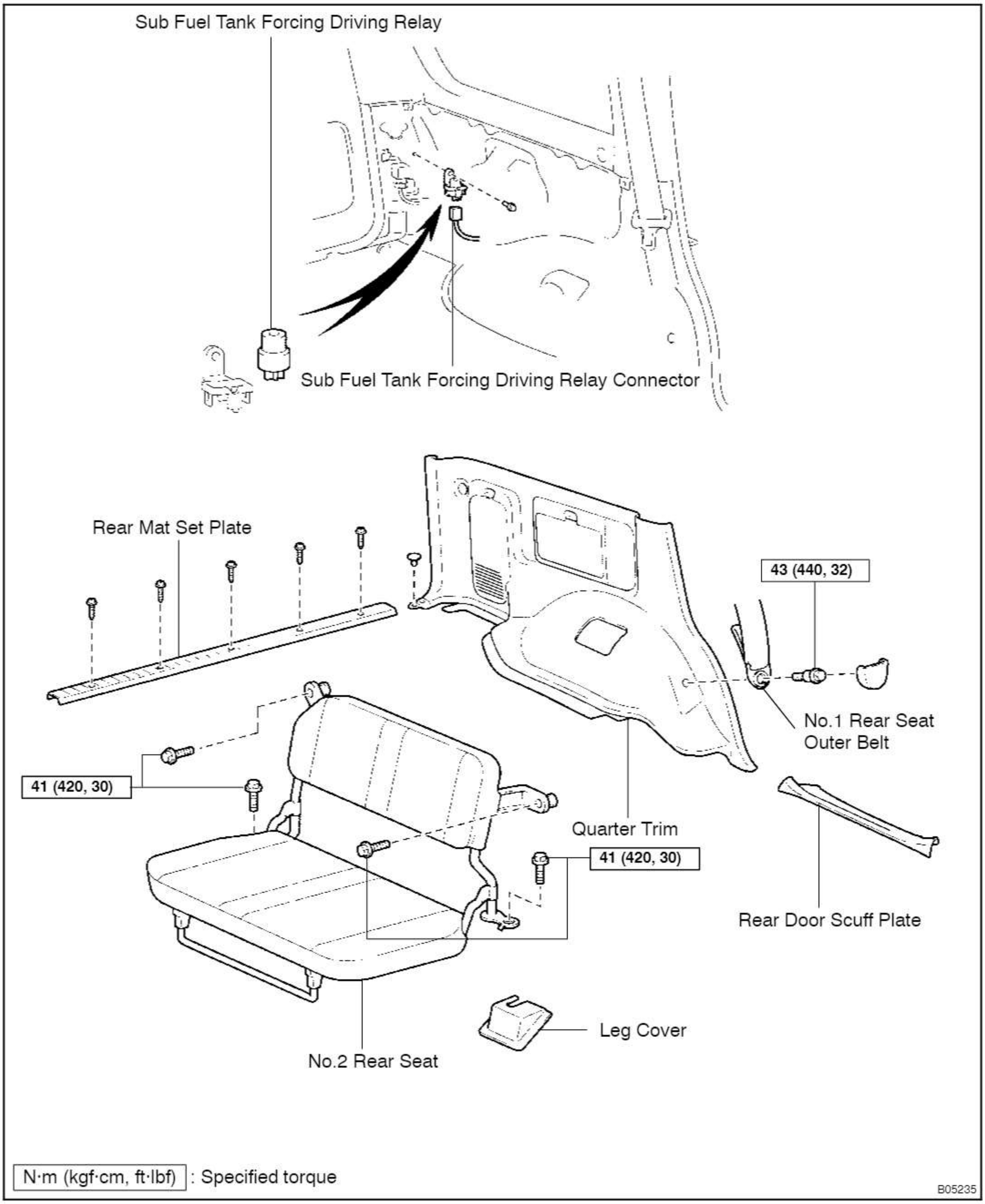

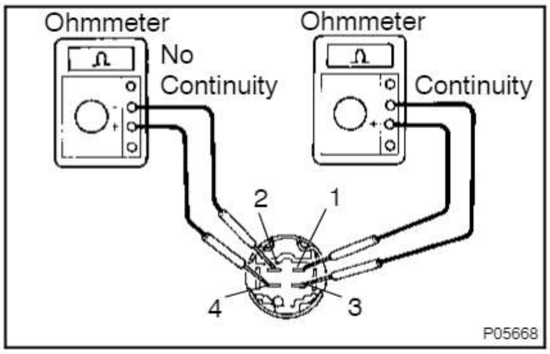

FI0E9–01

INSPECTION

1. **REMOVE SUB FUEL TANK FORCING DRIVING RELAY**
2. **INSPECT SUB FUEL TANK FORCING DRIVING RELAY**

(a) Inspect the relay continuity.

(1) Using an ohmmeter, check that there is continuity between terminals 1 and 3.

If there is no continuity, replace the relay.

(2) Check that there is no continuity between terminals 2 and 4.

If there is continuity, replace the relay.

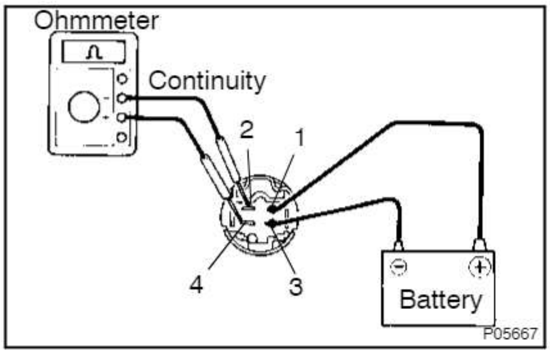

(b) Inspect the relay operation.

(1) Apply battery positive voltage across terminals 1 and 3.

(2) Using an ohmmeter, check that there is continuity between terminals 2 and 4.

If there is no continuity, replace the relay.

3. **REINSTALL SUB FUEL TANK FORCING DRIVING RELAY**

FUEL PUMP RESISTOR (Except Europe)

COMPONENTS

FI0EA–01

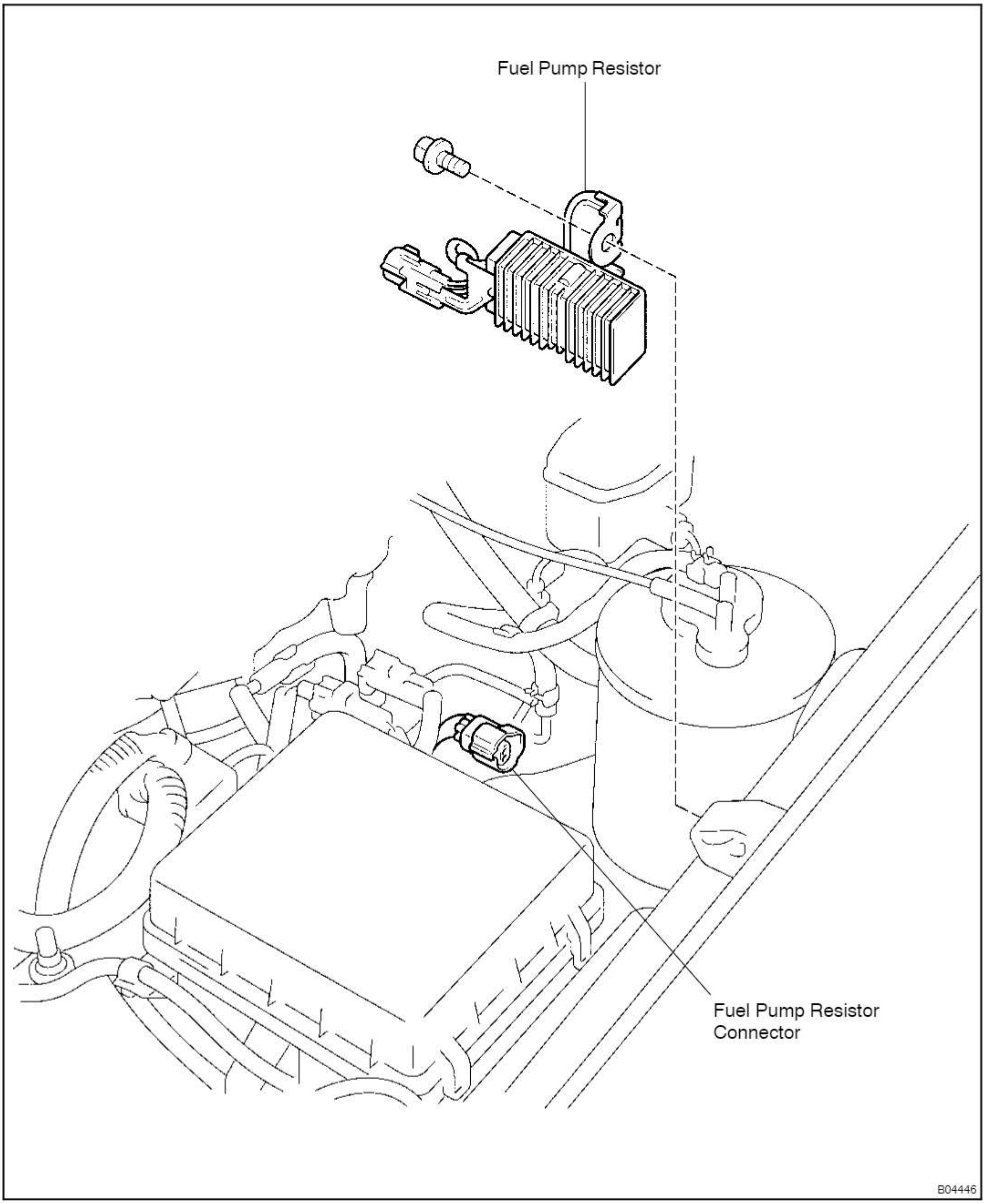

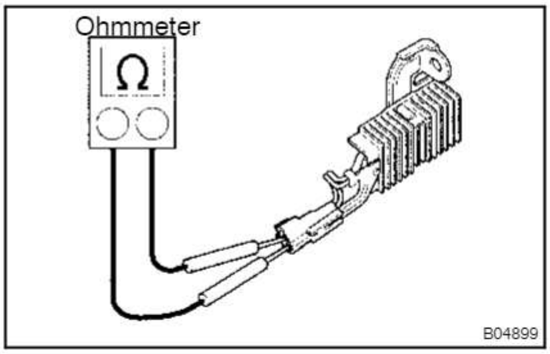

INSPECTION

1. **REMOVE FUEL PUMP RESISTOR**
2. **INSPECT FUEL PUMP RESISTOR**

Using an ohmmeter, measure the resistance between the terminals.

Resistance:

0.71 – 0.75 Ω at 20°C (68°F)

If the resistance is not as specified, replace the resistor.

3. **REINSTALL FUEL PUMP RESISTOR**

VSV FOR EVAPORATIVE EMISSION (EVAP)

COMPONENTS

FI0EC–01

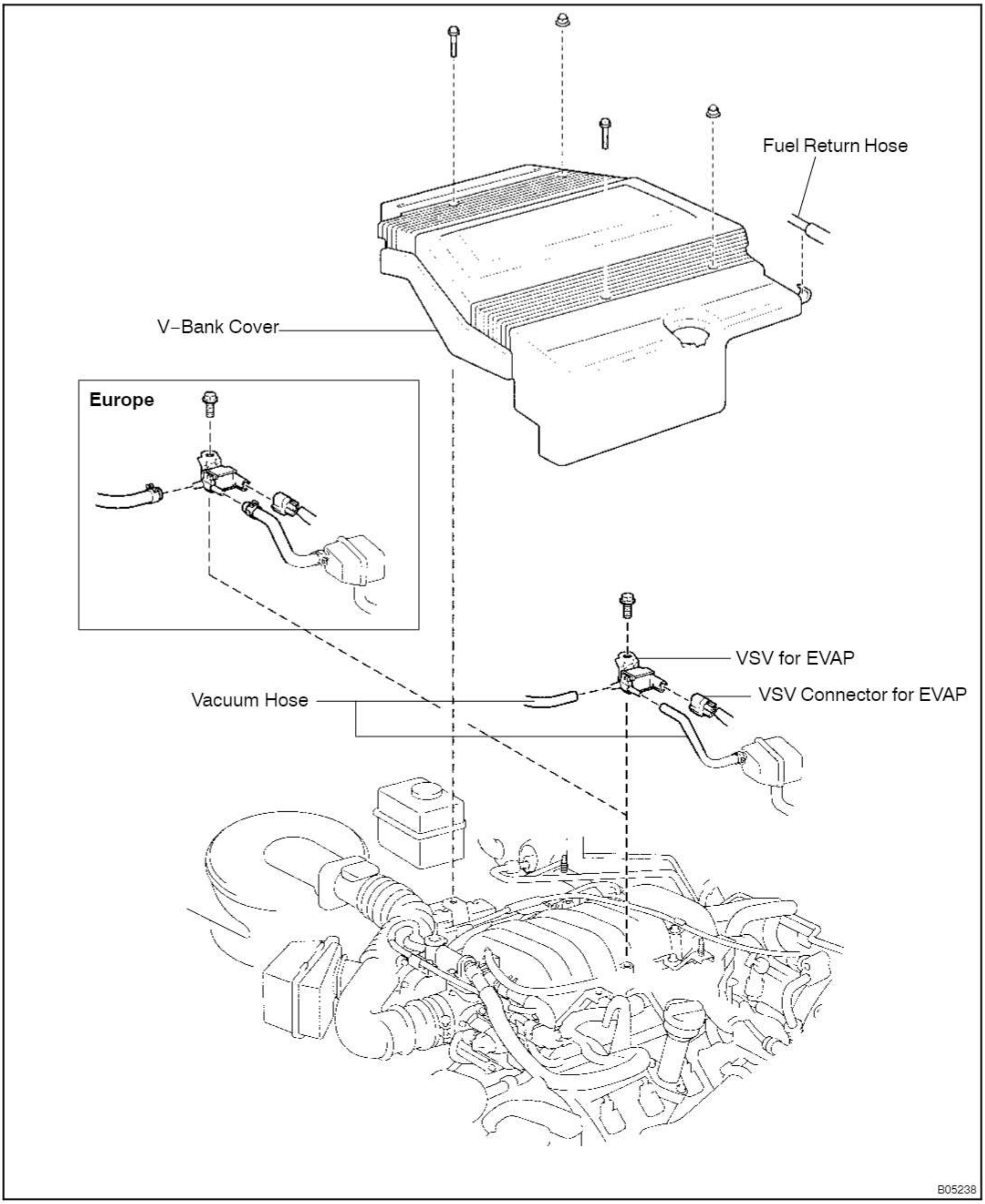

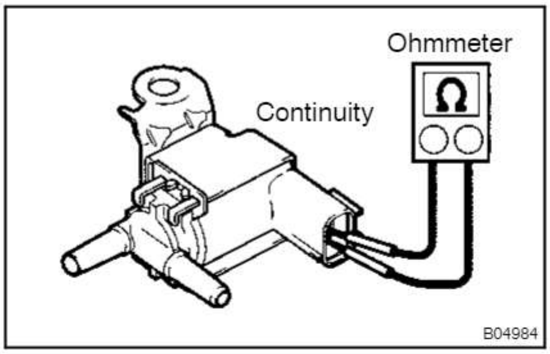

INSPECTION

1. **REMOVE V–BANK COVER**
2. **REMOVE VSV**
3. **INSPECT VSV**

(a) inspect the VSV for open circuit.
Using an ohmmeter, check that there is continuity between the terminals.
Resistance: 30 – 34 Ω at 20°C (68°F)

If there is no continuity, replace the VSV.

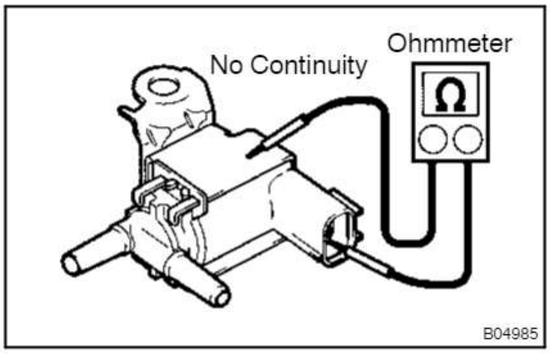

(b) Inspect the VSV for ground.
Using an ohmmeter, check that there is no continuity between each terminal and the body.

If there is continuity, replace the VSV

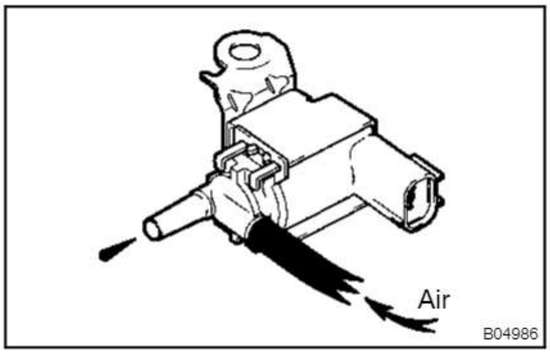

(c) Inspect the VSV operation.
(1) Check that air dose not flow from ports.

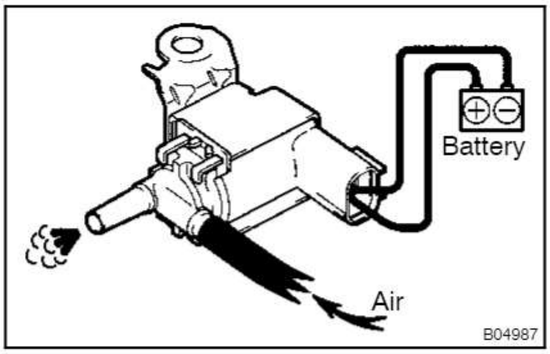

(2) Apply battery positive voltage across the terminals.
(3) Check that air flows from ports.

If operation is not as specified, replace the VSV.

4. **REINSTALL VSV**
5. **REINSTALL V–BANK COVER**

WATER TEMPERATURE SENSOR

COMPONENTS

FI0EE–01

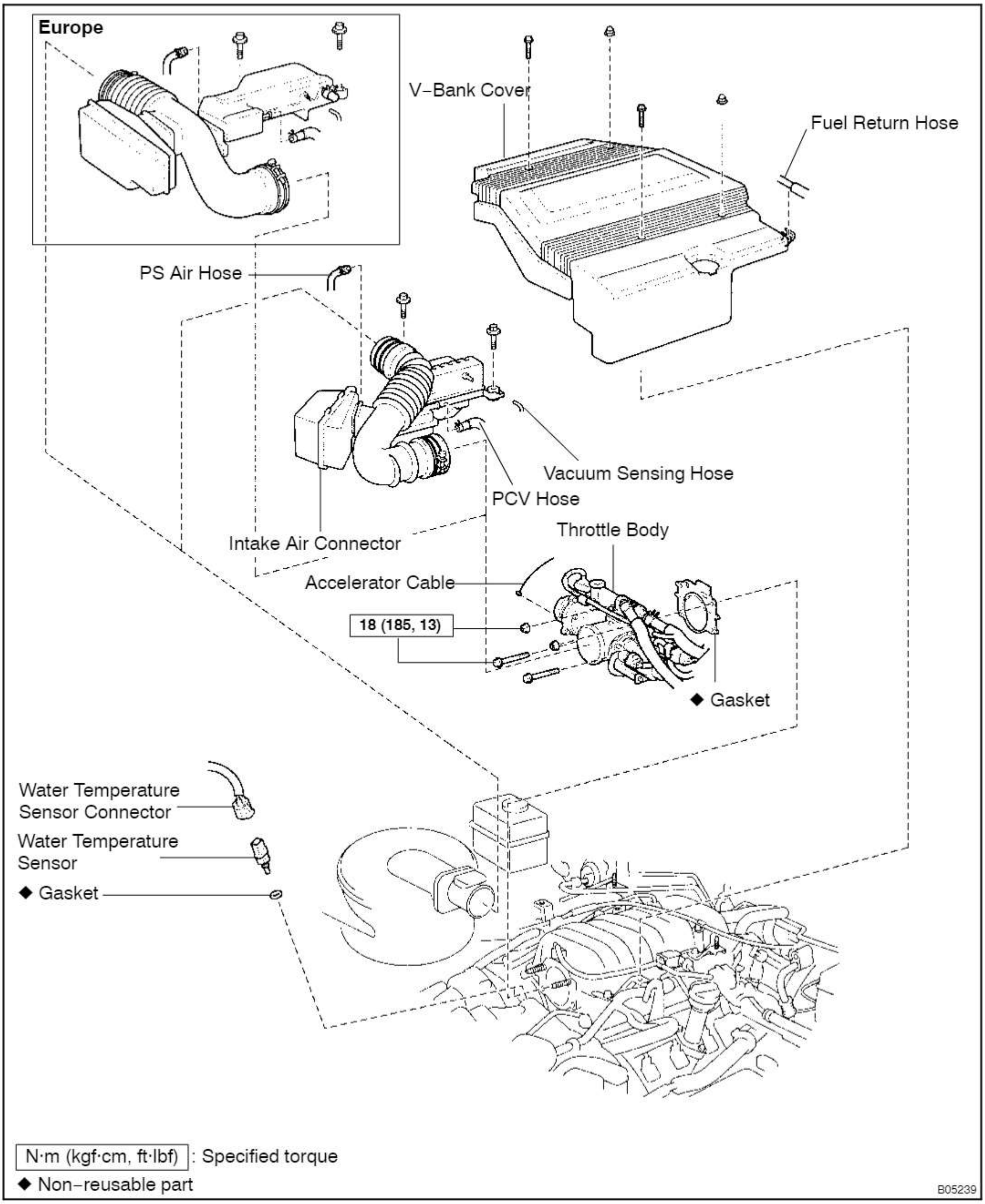

N·m (kgf·cm, ft·lbf) : Specified torque

◆ Non–reusable part

B05239

INSPECTION

1. **DRAIN ENGINE COOLANT**
2. **REMOVE V–BANK COVER**
3. **REMOVE INTAKE AIR CONNECTOR**
4. **DISCONNECT THROTTLE BODY FROM INTAKE MANIFOLDS**

(a) Disconnect the accelerator cable from the throttle body.
(b) Remove the 2 bolts and 2 nuts, and disconnect the throttle body from the intake manifold.
(c) Remove the gasket.

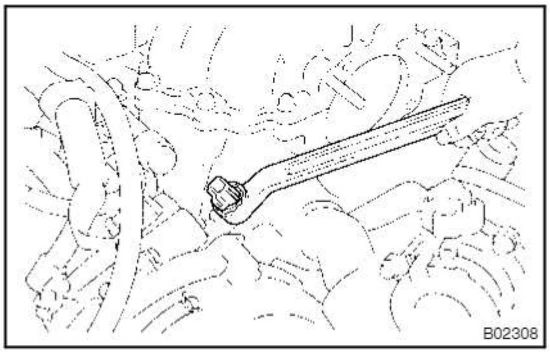

5. **REMOVE WATER TEMPERATURE SENSOR**

(a) Disconnect the temp. sensor connector.
(b) Remove the temp. sensor and gasket.

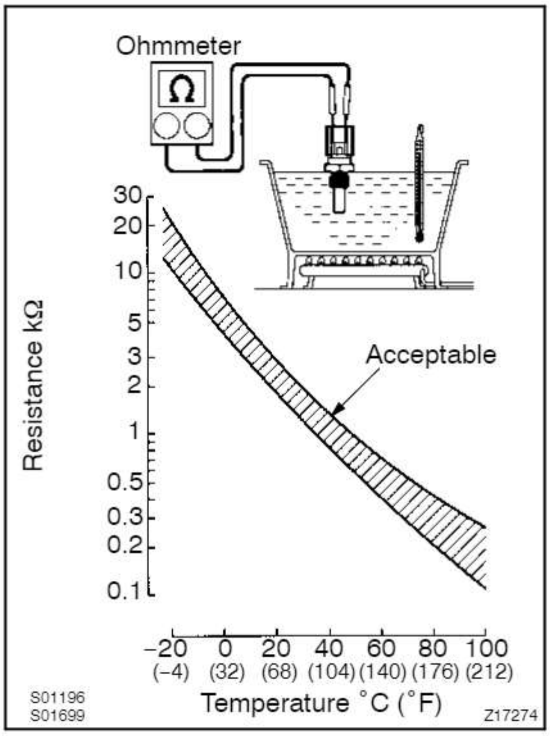

6. **INSPECT WATER TEMPERATURE SENSOR**

Using an ohmmeter, measure the resistance between the terminals.

Resistance: Refer to the graph

If the resistance is not as specified, replace the temp. sensor.

7. **REINSTALL WATER TEMPERATURE SENSOR**

(a) Install a new gasket and the temp. sensor.
Torque: 19.6 N·m (200 kgf·cm, 14 ft·lbf)
(b) Connect the temp. sensor connector.

8. **REINSTALL THROTTLE BODY TO INTAKE MANIFOLDS**

(a) Install a new gasket and the throttle body with the 2 bolts and 2 nuts.
Torque: 18 N·m (185 kgf·cm, 13 ft·lbf)
(b) Connect the accelerator cable to the throttle body.

9. **REINSTALL INTAKE AIR CONNECTOR**
10. **REFILL WITH ENGINE COOLANT (See page CO–2)**
11. **REINSTALL V–BANK COVER**

VARIABLE RESISTOR (w/o TWC)

COMPONENTS

FI0EG–01

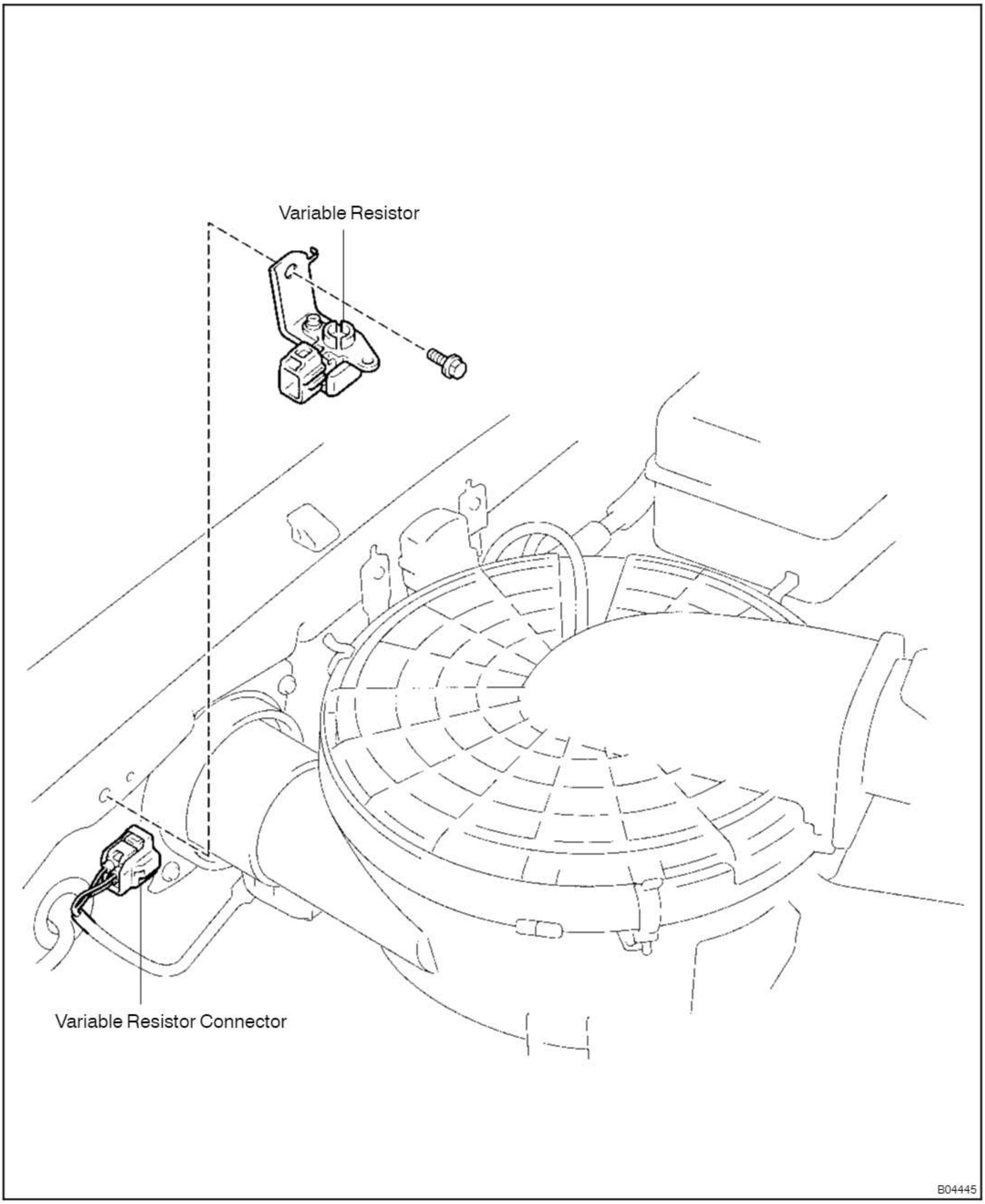

INSPECTION

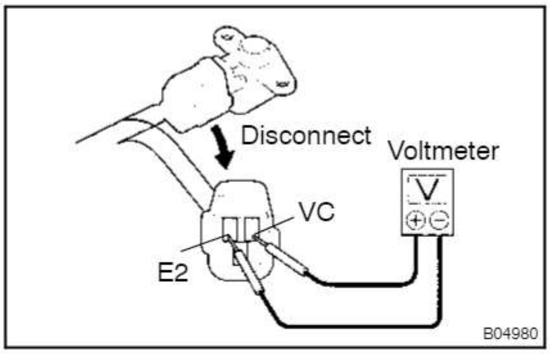

1. INSPECT POWER SOURCE VOLTAGE OF VARIABLE RESISTOR

(a) Disconnect the variable resistor connector.
(b) Turn the ignition switch ON.
(c) Using a voltmeter, measure the voltage between connector terminals VC and E2 of the wiring harness side.
Voltage: 4.5 – 5.5 V
(d) Reconnect the variable resistor connector.

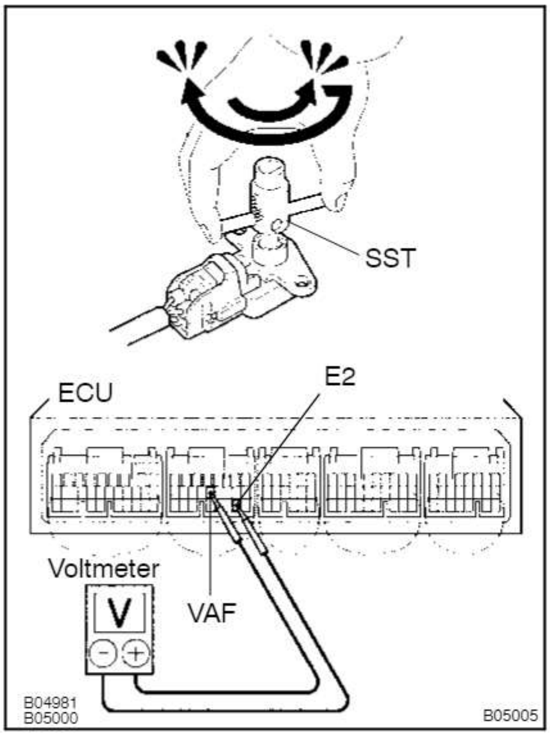

2. INSPECT POWER OUTPUT OF VARIABLE RESISTOR

(a) Turn the ignition switch ON.
(b) Connect a voltmeter to terminals VAF and E2 of the engine ECU, and measure the voltage while slowly turning the idle mixture adjusting screw first fully counter–clockwise, and then fully clockwise using SST.
SST 09243–00020
(c) Check that voltage changes smoothly from 0 V to approx. 5 V.

HINT:
There is no sudden jump up to 5 V or down to 0 V.

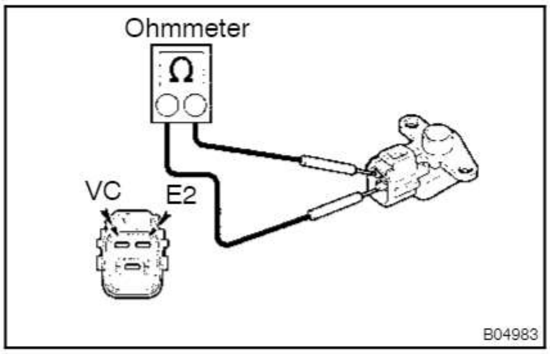

3. INSPECT RESISTANCE OF VARIABLE RESISTOR

(a) Disconnect the variable resistor connector.
(b) Using an ohmmeter, measure the resistance between terminals VC and E2 of the variable resistor.
Resistance: 4 – 6 kΩ

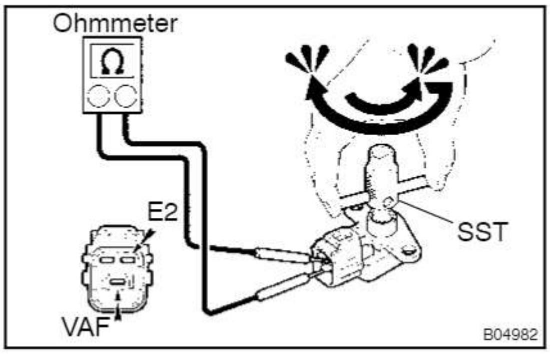

(c) Using SST, turn the idle mixture adjusting screw fully counterclockwise.
SST 09243–00020
(d) Connect the ohmmeter to terminals VAF and E2 of the variable resistor, and turn the idle mixture adjusting screw fully clockwise and check that the resistance value changes from approx. 5 kΩ to 0 Ω accordingly.
(e) Reconnect the variable resistor connector.

KNOCK SENSOR

COMPONENTS

FI0EI–01

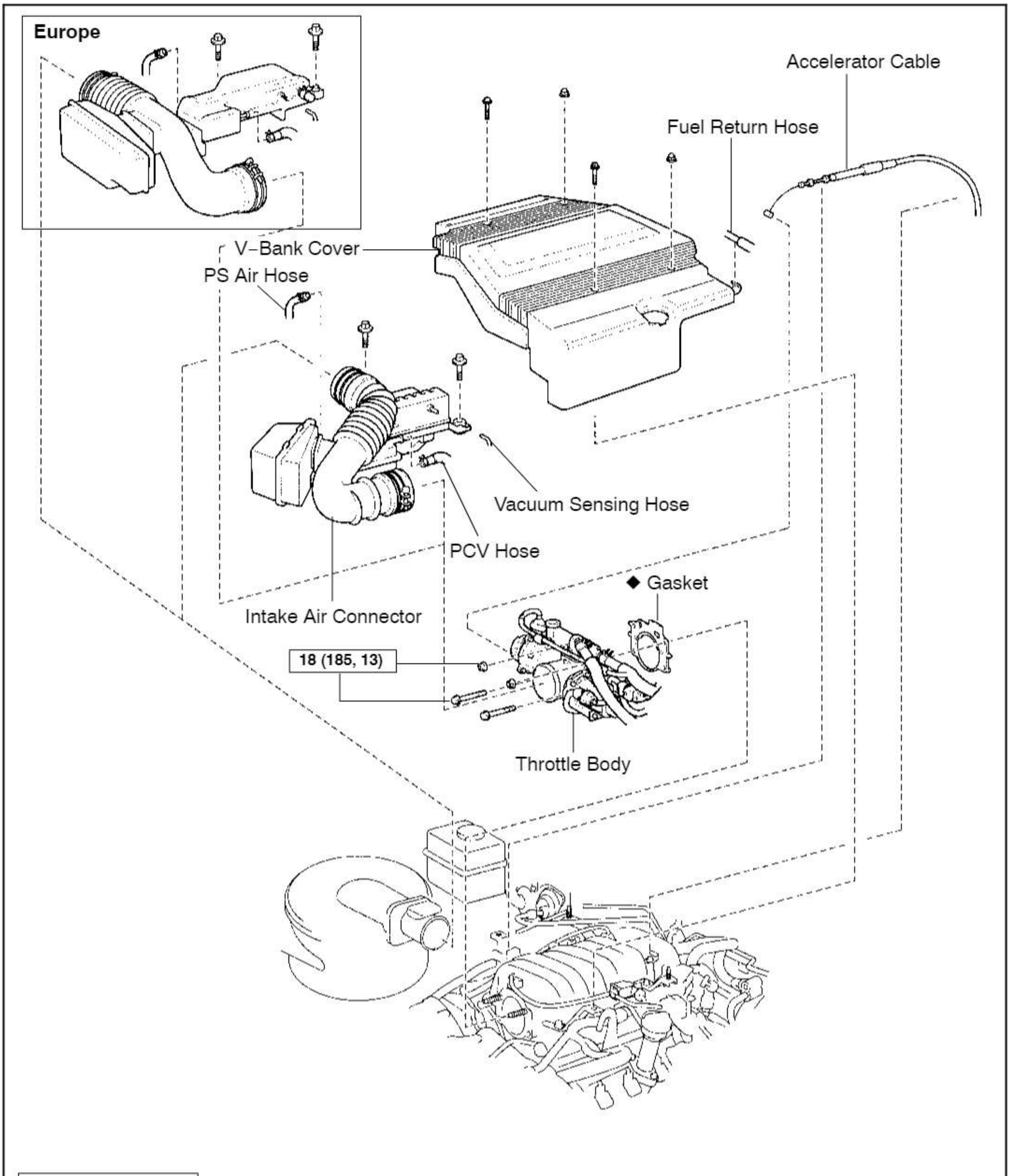

N·m (kgf·cm, ft·lbf) : Specified torque

◆ Non–reusable part

B05240

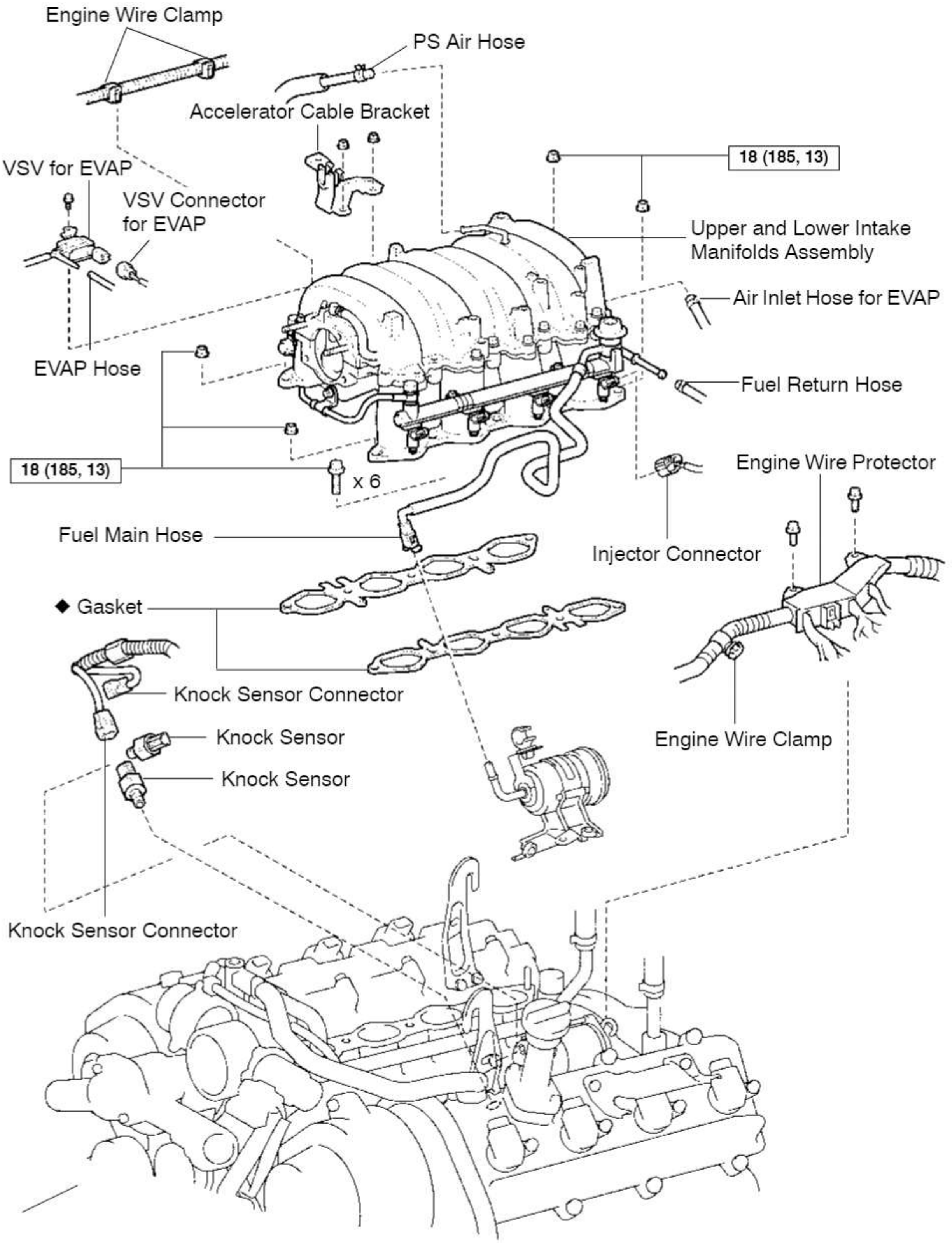

N·m (kgf·cm, ft·lbf) : Specified torque

◆ Non–reusable part

B05251

FI0ET–01

INSPECTION

1. **REMOVE V–BANK COVER**
2. **REMOVE INTAKE AIR CONNECTOR**
3. **DISCONNECT THROTTLE BODY FROM INTAKE MANIFOLDS (See page FI–64)**
4. **REMOVE UPPER AND LOWER INTAKE MANIFOLDS ASSEMBLY (See page EM–33)**

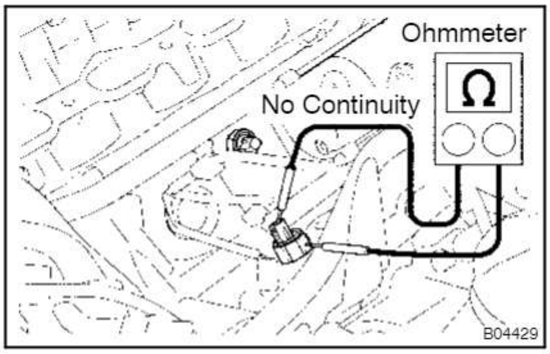

5. **INSPECT KNOCK SENSOR**

(a) Disconnect the knock sensor connectors.

(b) Using an ohmmeter, check that there is no continuity between the terminal and body.

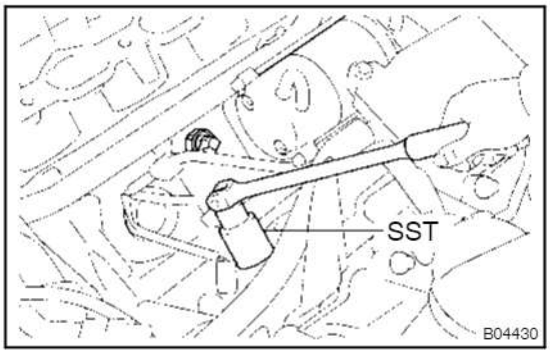

If there is continuity, replace the sensor with SST.

SST 09816–30010

Torque: 45 N·m (450 kgf·cm, 33 ft·lbf)

(c) Reconnect the knock sensor connectors.

6. **REINSTALL UPPER AND LOWER INTAKE MANIFOLDS ASSEMBLY (See page EM–55)**
7. **REINSTALL THROTTLE BODY TO INTAKE MANIFOLDS (See page FI–64)**
8. **REINSTALL INTAKE AIR CONNECTOR**
9. **REINSTALL V–BANK COVER**

OXYGEN SENSOR (w/ TWC)

COMPONENTS

SF0Y9–03

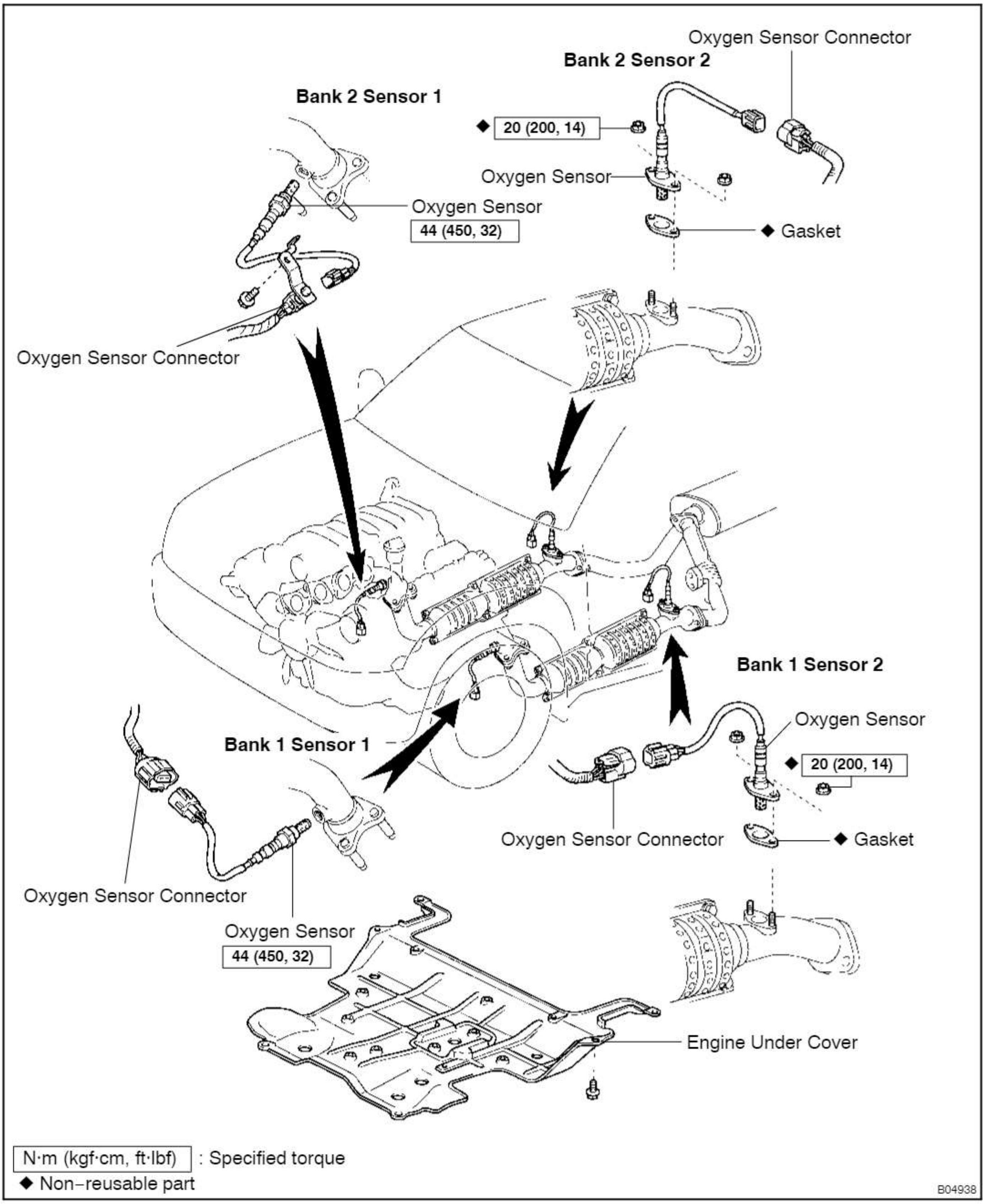

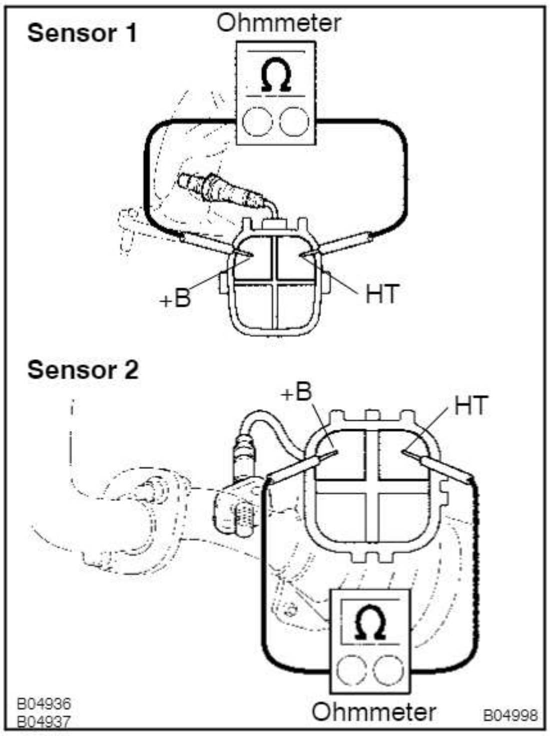

INSPECTION

1. **INSPECT HEATER RESISTANCE OF OXYGEN SENSORS**

(a) Disconnect the oxygen sensor connector.

(b) Using an ohmmeter, measure the resistance between terminals +B and HT.

Resistance: 11 – 16 Ω at 20°C (68°F)

If the resistance is not as specified, replace the sensor.

Torque:

44 N·m (450 kgf·cm, 32 ft·lbf) for sensor 1

20 N·m (200 kgf·cm, 14 ft·lbf) for sensor 2

(c) Reconnect the oxygen sensor connector.

2. **INSPECT OPERATION OF OXYGEN SENSORS (See page DI–51)**

FUEL PUMP ECU (Europe)

SF0PY–05

COMPONENTS

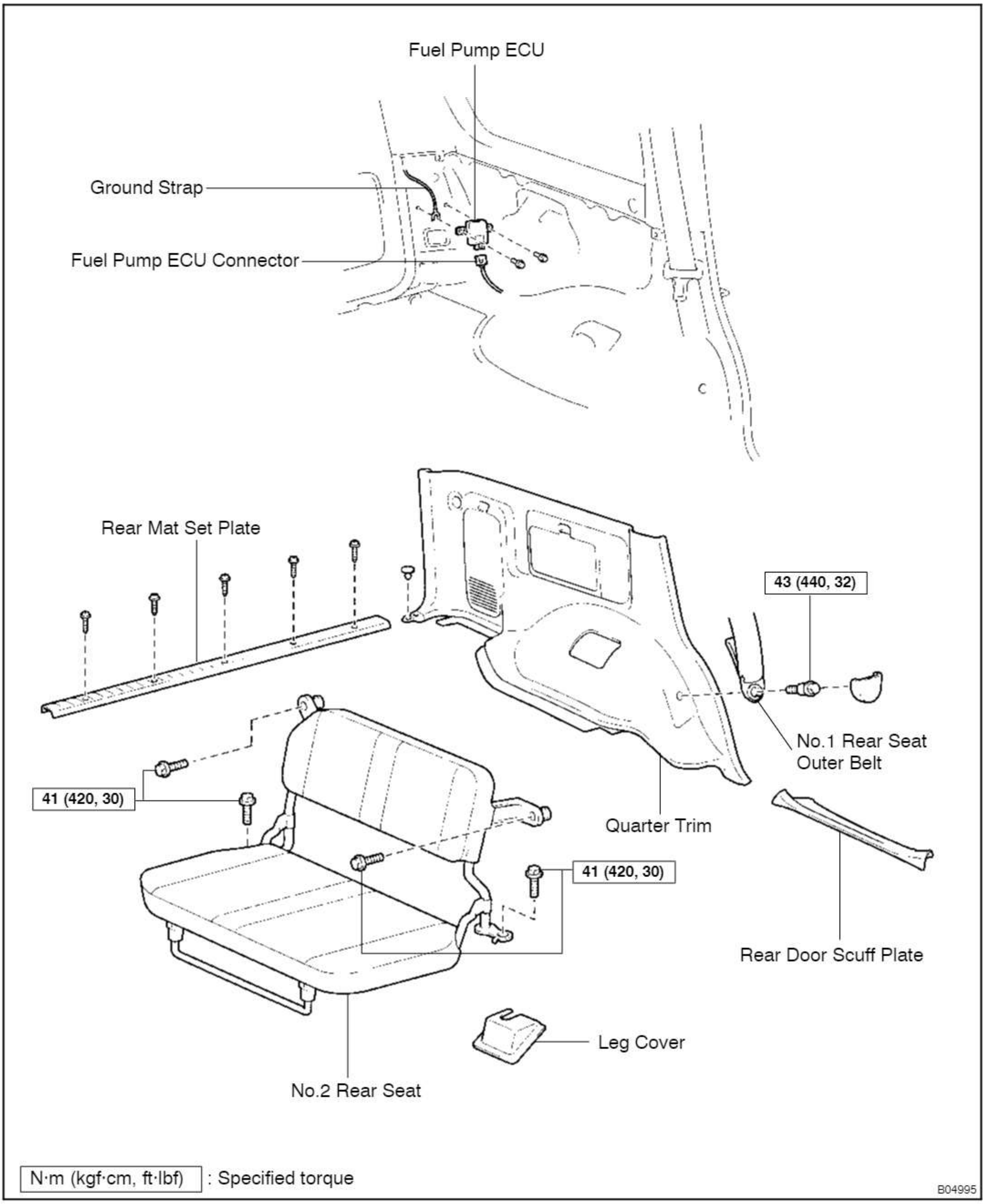

SF0PZ–04

INSPECTION

1. **REMOVE FUEL PUMP ECU**
2. **INSPECT FUEL PUMP ECU (See page DI–96)**
3. **REINSTALL FUEL PUMP ECU**

ENGINE ECU

COMPONENTS

FI0EK–01

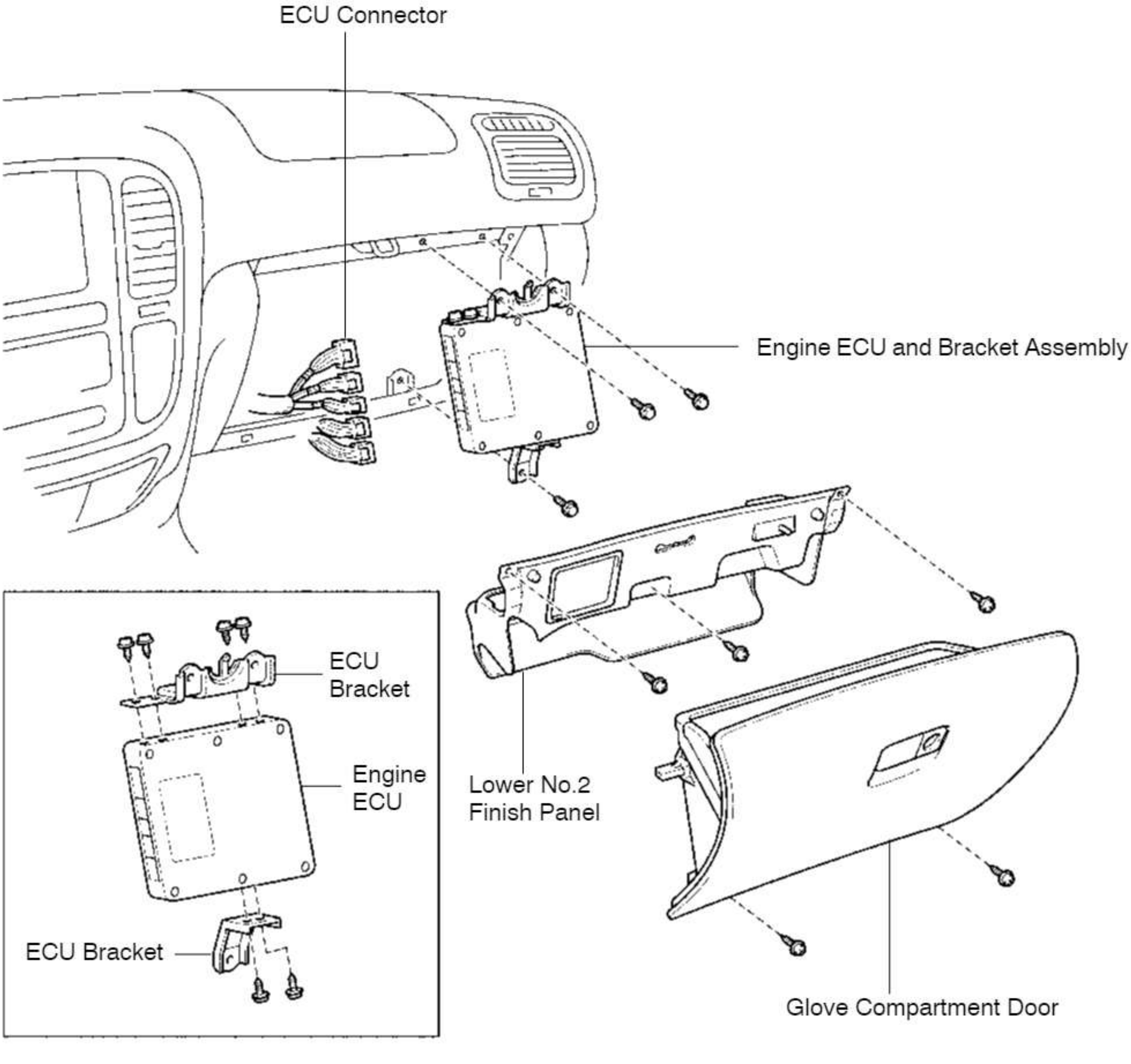

B04450

INSPECTION

1. **REMOVE ENGINE ECU**
2. **INSPECT ENGINE ECU (See page DI–22)**
3. **REINSTALL ENGINE ECU**

FUEL CUT RPM

FI0EM–01

INSPECTION

1. WARM UP ENGINE

Allow the engine to warm up to normal operating temperature.

2. CONNECT TACHOMETER, HAND–HELD TESTER OR OBDII SCAN TOOL (See page EM–11)

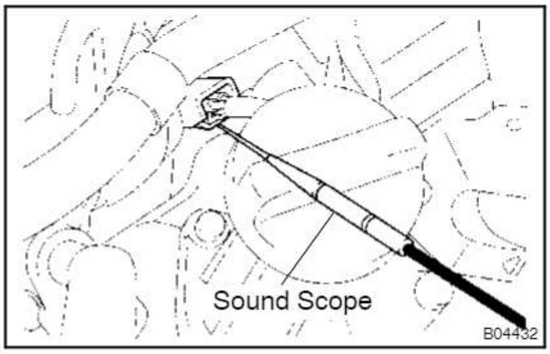

3. INSPECT FUEL CUTOFF RPM OPERATION

(a) Increase the engine speed to at least 2,500 rpm.

(b) Check for injector operating noise.

(c) Check that when the throttle lever is released, injector operation noise stops momentarily and then resumes.

HINT:

- The vehicle should be stopped.
- Measure with the A/C OFF.

Fuel return speed: 1,000 rpm

4. DISCONNECT TACHOMETER, HAND–HELD TESTER OR OBDII SCAN TOOL

COOLANT

INSPECTION

HINT:

Check the coolant level when the engine is cold.

1. CHECK ENGINE COOLANT LEVEL AT RADIATOR RESERVOIR

The engine coolant level should be between the "LOW" and "FULL" lines at normal temperature (20°C (68°F)).

If low, check for leaks and add engine coolant up to the "FULL" line.

2. CHECK ENGINE COOLANT QUALITY

(a) Remove the radiator cap.

CAUTION:

To avoid the danger of being burned, do not remove the radiator cap while the engine and radiator are still hot, as fluid and steam can be blown out under pressure.

(b) There should not be any excessive deposits of rust or scale around the radiator cap or radiator filter hole, and the coolant should be free from oil.

If excessively dirty, clean the coolant passages and replace the coolant.

(c) Reinstall the radiator cap.

CO0F0–01

REPLACEMENT

1. DRAIN ENGINE COOLANT

(a) Remove the radiator cap.

CAUTION:

To avoid the danger of being burned, do not remove the radiator cap while the engine and radiator are still hot, as fluid and steam can be blown out under pressure.

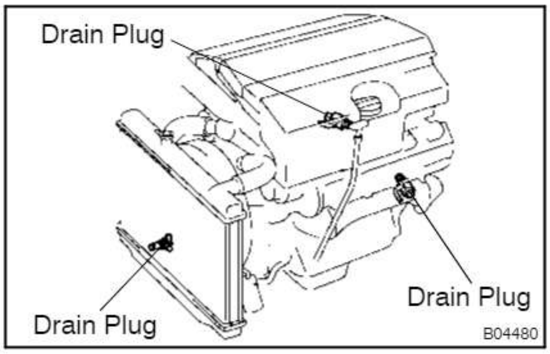

(b) Loosen the 3 drain plugs on the engine and radiator, and drain the coolant.

(c) Close the 3 drain plugs.

Torque: 12.7 N·m (130 kgf·cm, 9ft·lbf) for engine

2. REFILL WITH ENGINE COOLANT

(a) slowly fill the system with coolant.

- Use a good brand of ethylene– glycol base coolant and mix it according to the manufacturer's directions.
- Using coolant which includes more than50 % ethylene–glycol (but not more than 70 %) is recommended.

NOTICE:

- **Do not use an alcohol type coolant.**
- **the coolant should be mixed with demineralized water or distilled water.**

Capacity:
Europe: 15.3 liters (16.2 US qts, 13.4 Imp. qts)
G.C.C. countries:
M/T: 15.2 liters (16.1 US qts, 13.3 Imp. qts)
A/T: 14.8 liters (15.6 US qts, 13.0 Imp. qts)
Australia: 14.8 liters (15.6 US qts, 13.0 Imp. qts)
w/ rear heater: 15.3 liters (16.2 US qts, 13.4 Imp. qts)
Others:
M/T: 15.7 liters (16.7 US qts, 13.7 Imp. qts)
A/T: 15.3 liters (16.2 US qts, 13.4 Imp. qts)

(b) Install the radiator cap.

(c) Bleed the cooling system.

(1) Start the engine, and open the heater water valve.

(2) Maintain the engine speed at 2,000 – 2,500 rpm, and warm up the engine.

(d) Stop the engine, and wait until the engine coolant cools down.

(e) Refill the radiator reservoir with coolant until it reaches the "FULL" line.

3. CHECK FOR ENGINE COOLANT LEAKS

WATER PUMP

COMPONENTS

C00P1–01

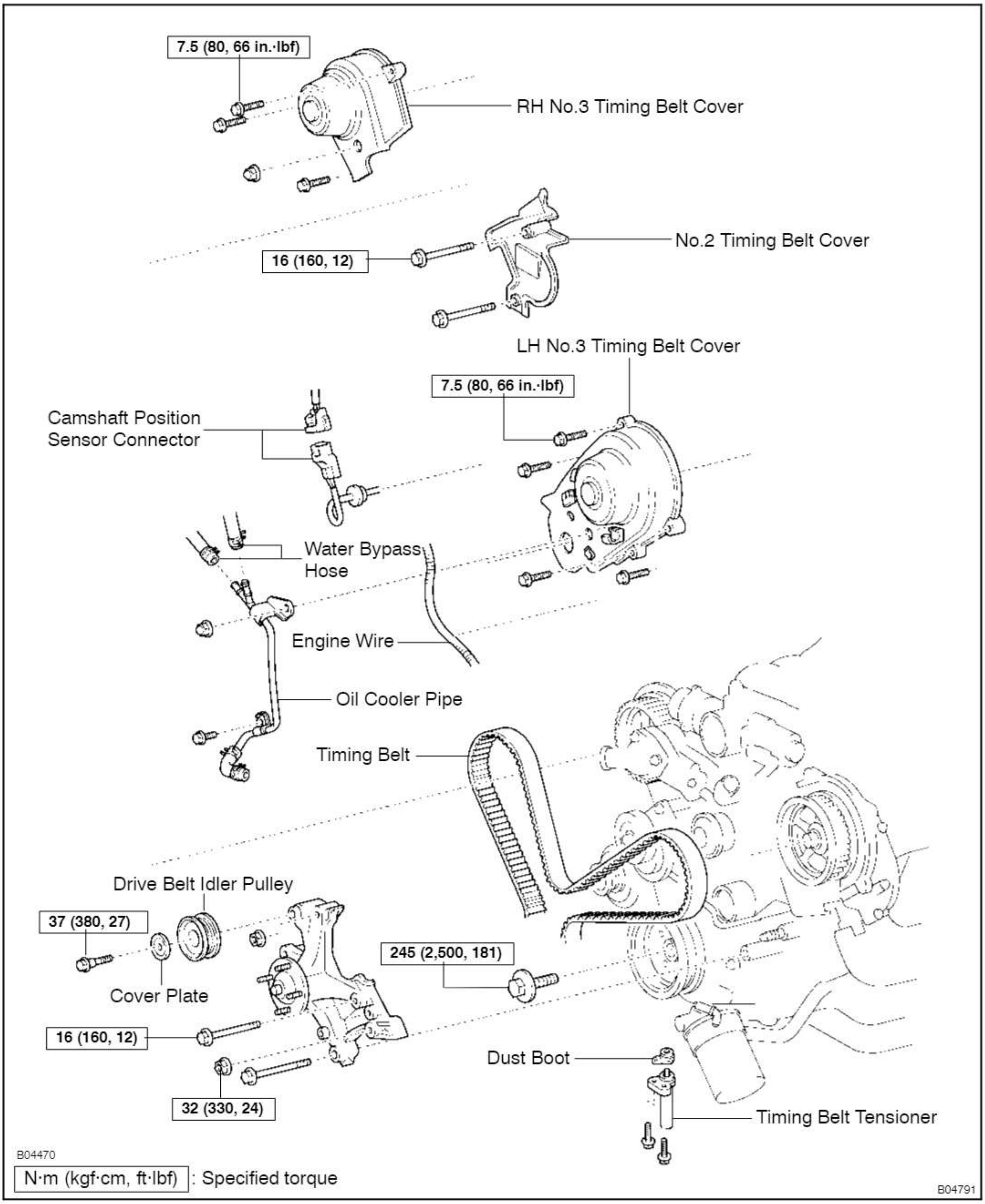

N·m (kgf·cm, ft·lbf) : Specified torque

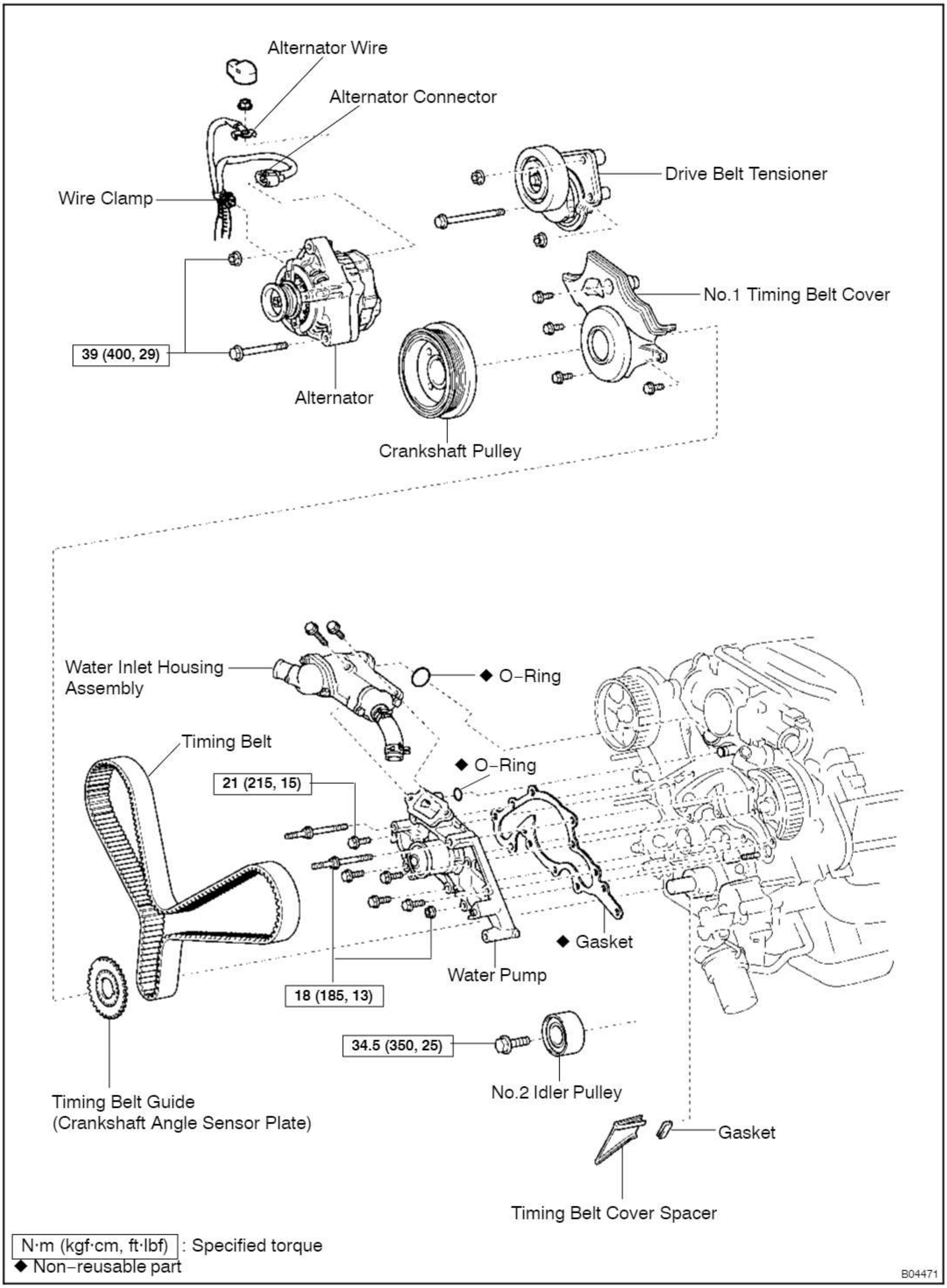
Alternator Wire
Alternator Connector
Wire Clamp
Drive Belt Tensioner
No.1 Timing Belt Cover
39 (400, 29)
Alternator
Crankshaft Pulley
Water Inlet Housing Assembly
◆ O–Ring
Timing Belt
◆ O–Ring
21 (215, 15)
◆ Gasket
Water Pump
18 (185, 13)
34.5 (350, 25)
No.2 Idler Pulley
Timing Belt Guide (Crankshaft Angle Sensor Plate)
Gasket
Timing Belt Cover Spacer
N·m (kgf·cm, ft·lbf) : Specified torque
◆ Non–reusable part
B04471

CO0P2–01

REMOVAL

1. **DRAIN ENGINE COOLANT**
2. **REMOVE TIMING BELT (See page EM–16)**
3. **REMOVE NO.2 IDLER PULLEY (See page EM–14)**

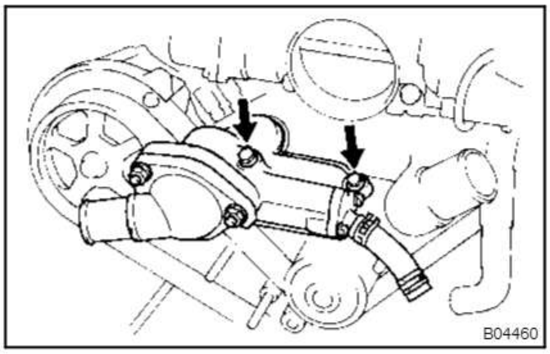

4. **REMOVE WATER INLET AND INLET HOUSING ASSEMBLY**

(a) Disconnect the water bypass hose from the water inlet housing.
(b) Remove the 2 bolts holding the water inlet housing to the water pump.
(c) Disconnect the water inlet housing from the front water bypass joint, and remove the water inlet and inlet housing assembly.
(d) Remove the O–ring from the water inlet housing.

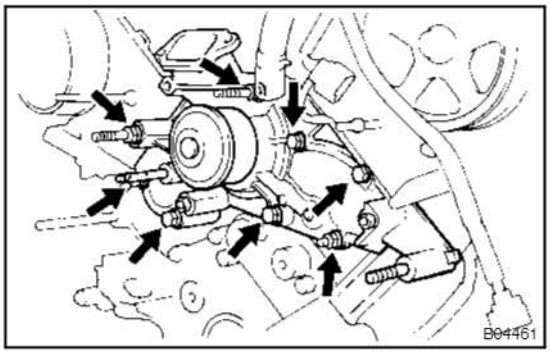

5. **REMOVE WATER PUMP**

(a) Remove the 5 bolts, 2 stud bolts, nut, water pump and gasket.
(b) Remove the O–ring from the water bypass pipe.

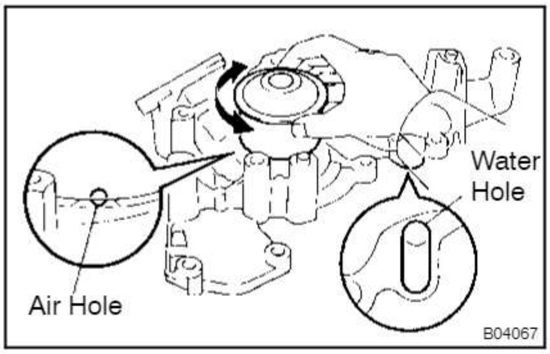

INSPECTION

1. INSPECT WATER PUMP

(a) Visually check the air hole and water hole for coolant leakage.

If leakage is found, replace the water pump and timing belt.

(b) Turn the pulley, and check that the water pump bearing moves smoothly and quietly.

If necessary, replace the water pump.

2. INSPECT TIMING BELT COMPONENTS (See page EM–21)

CO0P4–01

INSTALLATION

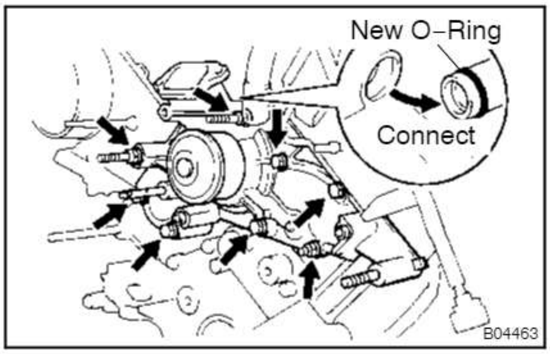

1. INSTALL WATER PUMP

(a) Install a new O–ring to the water bypass pipe end.
(b) Apply soapy water to the O–ring.
(c) Connect the water pump to the water bypass pipe end.
(d) Install the water pump and new gasket with the 5 bolts, 2 stud bolts and nut. Uniformly tighten the bolts, stud bolts and nut in several passes.

Torque:
Bolt: 21 N·m (215 kgf·cm, 15 ft·lbf)
Stud bolt and nut: 18 N·m (185 kgf·cm, 13 ft·lbf)

HINT:
Use bolts 35 mm (1.38 in.) in length.

2. INSTALL WATER INLET AND INLET HOUSING ASSEMBLY

(a) Remove any old packing (FIPG) material and be careful not to drop any oil on the contact surfaces of the water inlet housing and water pump.
- Using a razor blade and gasket scraper, remove all the old packing (FIPG) material from the gasket surfaces and sealing groove.
- Thoroughly clean all components to remove all the loose material.
- Using a non–residue solvent, clean both sealing surfaces.

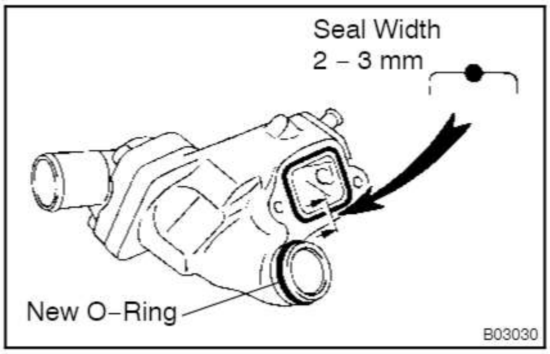

(b) Apply seal packing to the sealing groove of water inlet housing as shown in the illustration.
seal packing: Part No. 08826–00100 or equivalent
- Install a nozzle that has been cut to a 2 – 3 mm (0.08 – 0.12 in.) opening.
- Parts must be assembled within 5 minutes of application. Other wise the material must be removed and reapplied.
- Immediately remove nozzle from the tube and reinstall cap.

(c) Install a new O–ring to the water inlet housing.
(d) Apply soapy water on the O–ring.
(e) Attach the water inlet housing end to the front water bypass joint hole.

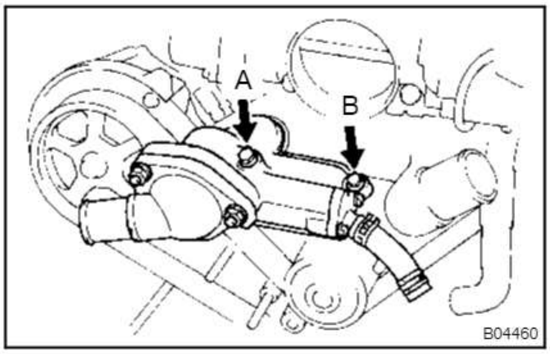

(f) Install the water inlet and housing assembly with the 2 bolts. Alternately tighten the bolts.
Torque: 18 N·m (185 kgf·cm, 13 ft·lbf)

HINT:

Each bolt length is indicated in the illustration.

Bolt length:

76 mm (3.00 in.) for A

22 mm (0.87 in.) for B

3. **INSTALL NO.2 IDLER PULLEY (See page EM–23)**
4. **INSTALL TIMING BELT (See page EM–23)**
5. **FILL WITH ENGINE COOLANT**
6. **START ENGINE AND CHECK FOR ENGINE COOLANT LEAKS**
7. **RECHECK ENGINE COOLANT LEVEL**

THERMOSTAT

COMPONENTS

CO0P5–01

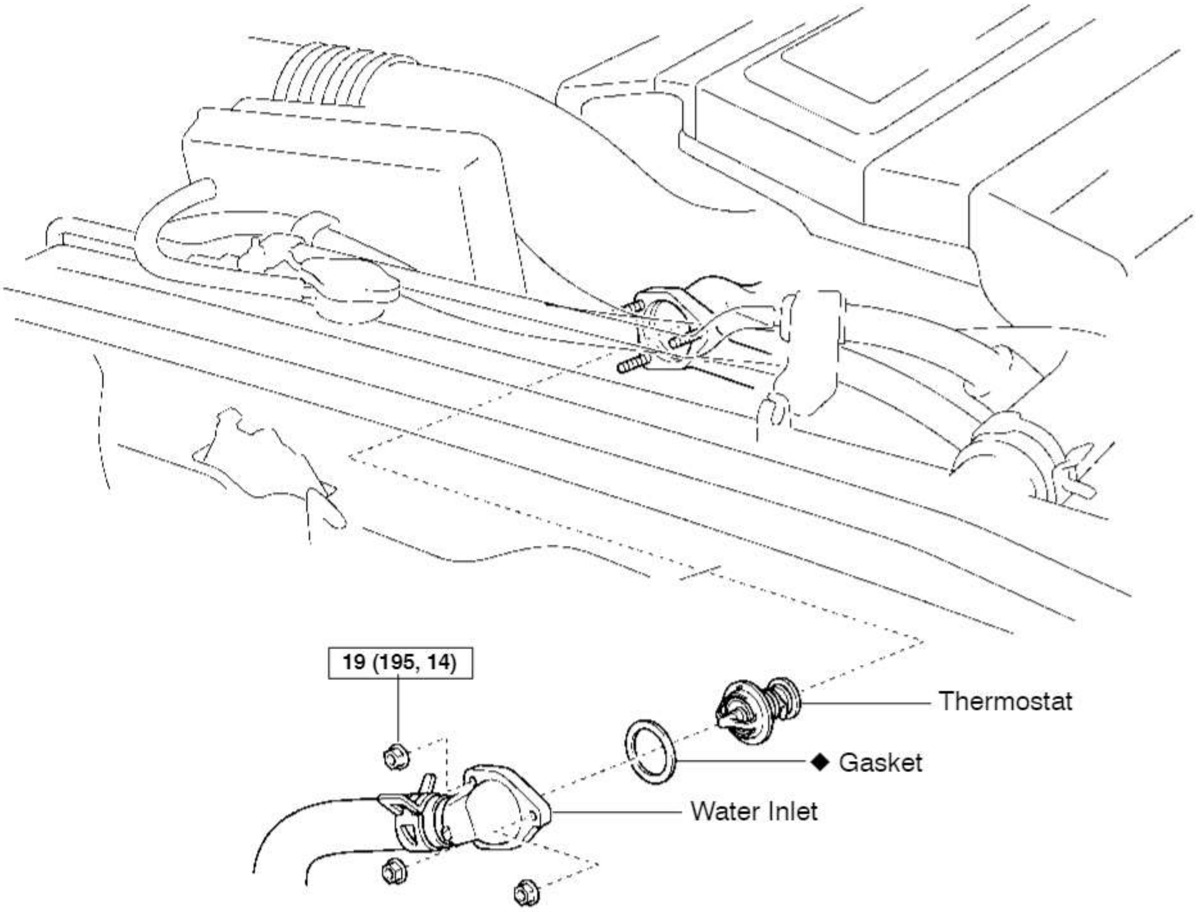

N·m (kgf·cm, ft·lbf) : Specified torque
◆ Non–reusable part

B04464

REMOVAL

HINT:

Removal of the thermostat would have an adverse effect, causing a lowering of cooling efficiency. Do not remove the thermostat, even if the engine tends to overheat.

1. **DRAIN ENGINE COOLANT**

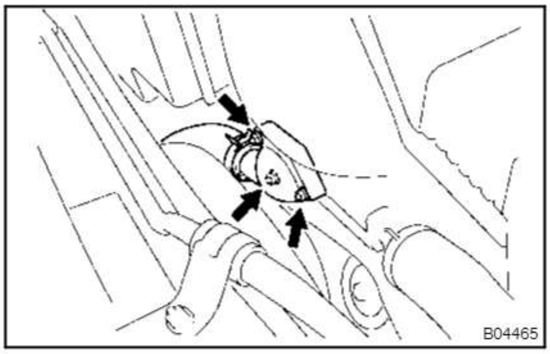

2. **DISCONNECT WATER INLET FROM WATER INLET HOUSING**

Remove the 3 nuts and disconnect the water inlet from the water inlet housing.

3. **REMOVE THERMOSTAT**

(a) Remove the thermostat.

(b) Remove the gasket from the thermostat.

CO0P7–01

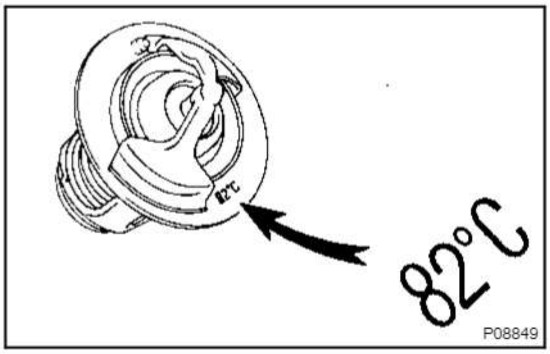

INSPECTION

INSPECT THERMOSTAT

HINT:

The thermostat is numbered with the valve opening temperature.

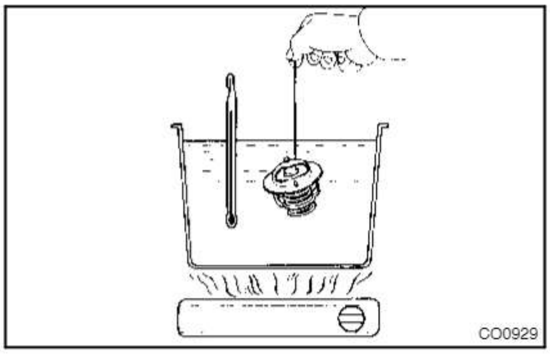

(a) Immerse the thermostat in water and gradually heat the water.

(b) Check the valve opening temperature.

Valve opening temperature: 80 – 84°C (176 – 183°F)

If the valve opening temperature is not specified, replace the thermostat.

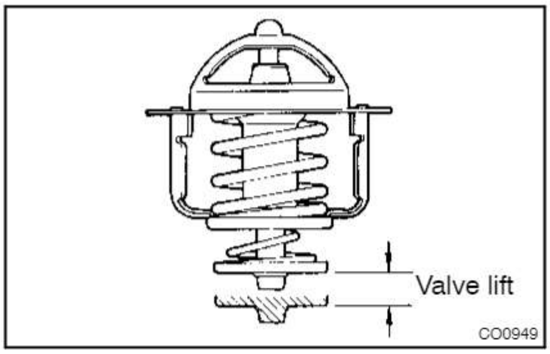

(c) Check the valve lift.

Valve lift: 10 mm (0.39 in.) or more at 95°C (203°F)

If the valve lift is not as specified, replace the thermostat.

(d) Check that the valve is fully closed when the thermostat is at low temperatures (below 40°C (104°F)).

If not closed, replace the thermostat.

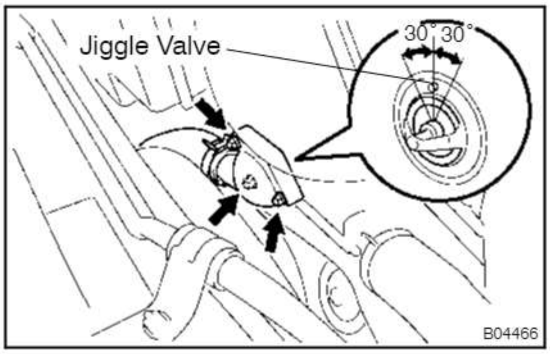

INSTALLATION

1. **PLACE THERMOSTAT IN WATER INLET HOUSING**

(a) Install a new gasket to the thermostat.

(b) insert the thermostat into the water inlet housing with the jiggle valve facing upward.

HINT:

The jiggle valve may be set within 30° of either side of the prescribed position.

2. **INSTALL WATER INLET**

Install the water inlet with the 3 bolts.

Torque: 19 N·m (195 kgf·cm, 14 ft·lbf)

3. **FILL WITH ENGINE COOLANT**
4. **START ENGINE AND CHECK FOR ENGINE COOLANT LEAKS**
5. **RECHECK ENGINE COOLANT LEVEL**

RADIATOR

CO0P9–01

ON–VEHICLE CLEANING

CLEAN RADIATOR

Using water or a steam cleaner, remove any mud or dirt from the radiator core.

NOTICE:

If using a high pressure type cleaner, be careful not to deform the fins of the radiator core. (i.e. Maintain a distance between the cleaner nozzle and radiator core.)

ON–VEHICLE INSPECTION

1. REMOVE RADIATOR CAP

CAUTION:

To avoid the danger of being burned, do not remove the radiator cap while the engine and radiator are still hot, as fluid and steam can be blown out under pressure.

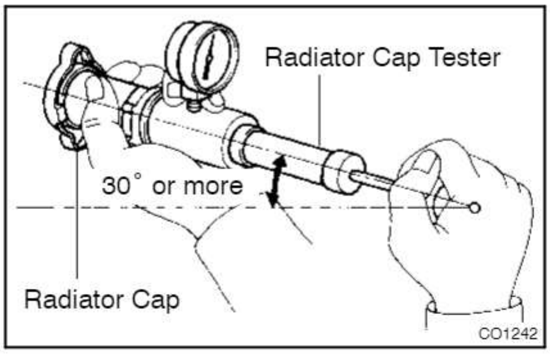

2. INSPECT RADIATOR CAP

NOTICE:

- **If the radiator cap has contaminations, always rinse it with water.**
- **Before using a radiator cap tester, wet the relief valve and pressure valve with engine coolant or water.**
- **When performing steps (a) and (b) below, keep the tester at an angle of over 30° above the horizontal.**

(a) Using a radiator cap tester, slowly pump the tester and check that air is coming from the vacuum valve.

Pump speed: 1 push/(3 second or more)

NOTICE:

Push the pump at a constant speed.

If air is not coming from the vacuum valve, replace the radiator cap.

(b) Pump the radiator cap tester, and measure the relief valve opening pressure.

Pump speed: 1 push within 1 second

NOTICE:

This pump speed is for the first pump only (in order to close the vacuum valve). After this, the pump speed can be reduced.

Standard opening pressure:
93 – 123 kPa (0.95 – 1.25 kgf/cm^2, 13.5 psi)
Minimum opening pressure:
78 kPa (0.8 kgf/cm^2, 11.4 psi)

HINT:

Use the tester's maximum reading as the opening pressure.

If the opening pressure is less than minimum, replace the radiator cap.

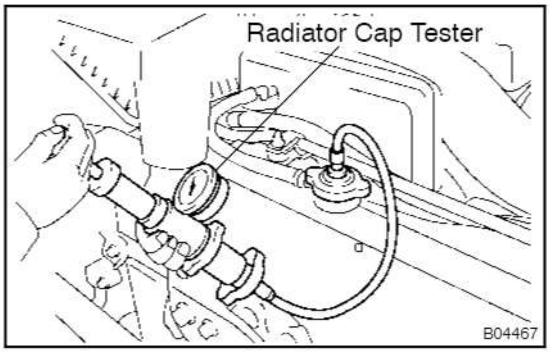

3. INSPECT COOLING SYSTEM FOR LEAKS

(a) Fill the radiator with coolant and attach a radiator cap tester.

(b) Warm up the tester.

(c) Pump it to 118 kPa (1.2 kgf/cm^2, 17.1 psi), and check that the pressure does not drop.

If pressure drops, check the hoses, radiator or water pump for leaks. If no external leaks are found, check the heater core, cylinder block and head.

4. REINSTALL RADIATOR CAP

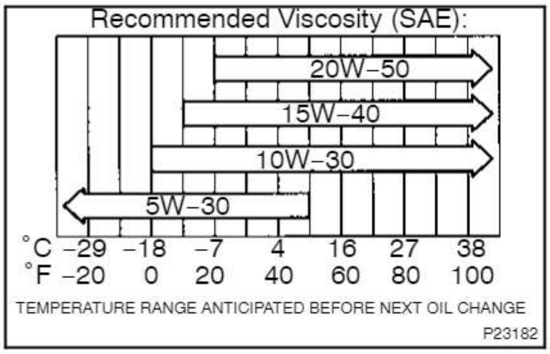

OIL AND FILTER

INSPECTION

LU0D0–01

1. **CHECK ENGINE OIL QUALITY**

Check the oil for deterioration, entry of water, discoloring or thinning.

If the quality is visibly poor, replace the oil.

Oil grade:

API grade SH Energy–conserving II or SJ, Energy–Conserving or ILSAC multigrade engine oil. Recommended viscosity is as shown in the illustration.

2. **CHECK ENGINE OIL LEVEL**

After warming up the engine and then 5 minutes after the engine stop, oil level should be between ”L” and ”F” of the dipstick. If low, check for leakage and add oil up to ”F” mark.

NOTICE:

- **Do not fill with engine oil above the ”F” mark.**

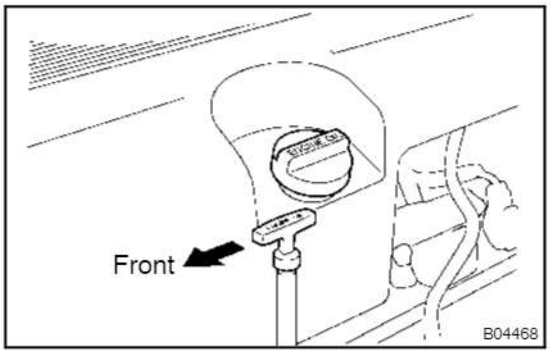

- **Install the oil dipstick facing the direction shown in the illustration.**

3. **REMOVE ENGINE UNDER COVER NO.1**

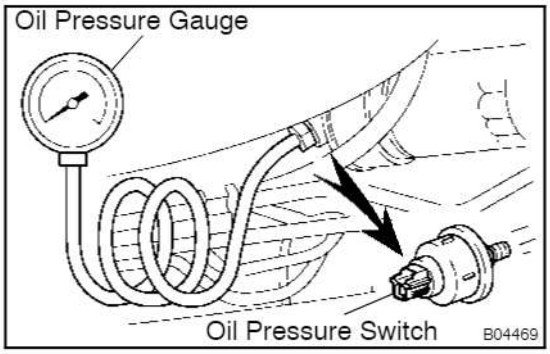

4. **REMOVE OIL PRESSURE SWITCH**
5. **INSTALL OIL PRESSURE GAUGE**
6. **WARM UP ENGINE**

Allow the engine to warm up to normal operating temperature.

7. **CHECK OIL PRESSURE**

Oil pressure:

At idle: 29 kPa (0.3 kgf/cm^2, 4.3 psi) or more

At 3,000 rpm:

294 – 588 kPa (3.0 – 6.0 kgf/cm^2, 43 – 85 psi)

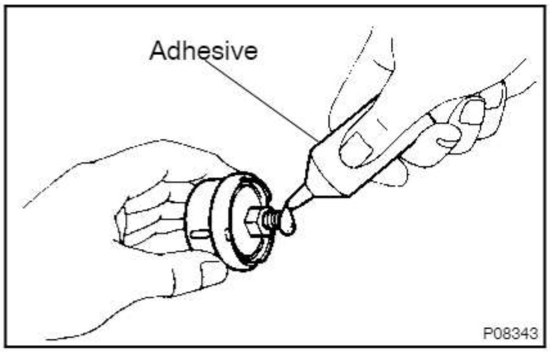

8. **REMOVE OIL PRESSURE GAUGE**
9. **REINSTALL OIL PRESSURE SWITCH**

(a) Apply adhesive to 2 or 3 threads of the oil pressure switch.

Adhesive:

Part No. 08833–00080, THREE BOND 1344, LOCTITE 242 or equivalent

(b) Reinstall the oil pressure switch.

10. **START ENGINE AND CHECK FOR ENGINE OIL LEAKS**
11. **REINSTALL ENGINE UNDER COVER NO.1**

REPLACEMENT

CAUTION:

- **Prolonged and repeated contact with mineral oil will result in the removal of natural fats from the skin, leading to dryness, irritation and dermatitis. In addition, used engine oil contains potentially harmful contaminants which may cause skin cancer.**
- **Care should be taken, therefore, when changing engine oil to minimize the frequency and length of time your skin is exposed to used engine oil. Protective clothing and gloves that cannot be penetrated by oil should be worn. The skin should be thoroughly washed with soap and water, or use water–less hand cleaner, to remove any used engine oil. Do not use gasoline, thinners, or solvents.**
- **In order to preserve the environment, used oil and used oil filters must be disposed of only at designated disposal sites.**

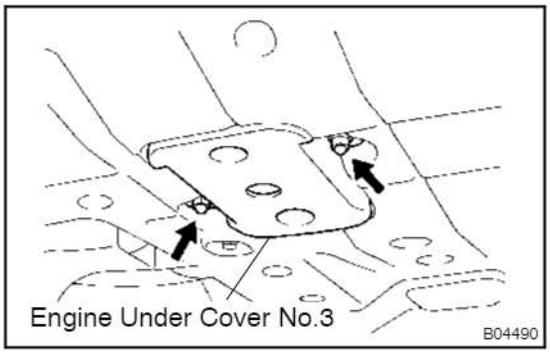

1. DRAIN ENGINE OIL

(a) Remove the 2 nut and engine under cover No.3

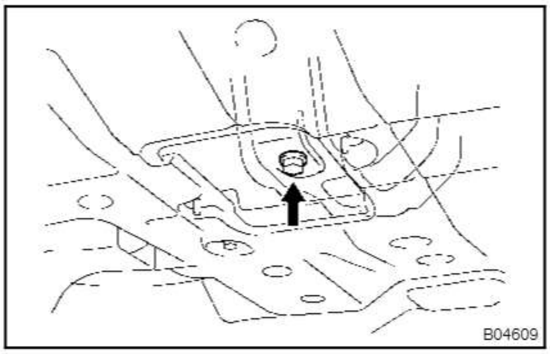

(b) Remove the oil filler cap.

(c) Remove the oil drain plug, and drain the oil into a container.

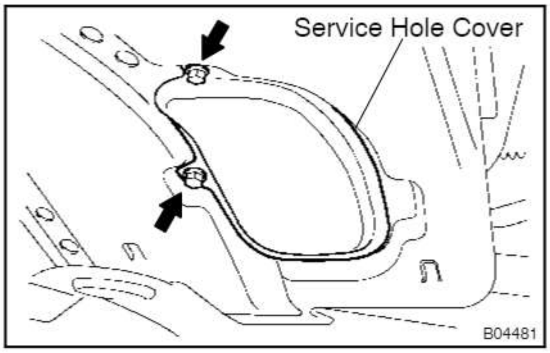

2. REPLACE OIL FILTER

(a) Remove the 2 bolts and service hole cover.

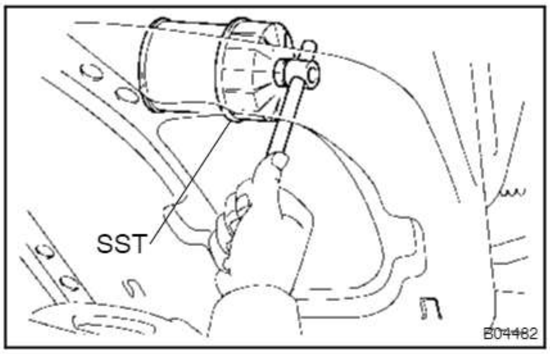

(b) Using SST, remove the oil filter.
SST 09228–07501

(c) Clean the oil filter contact surface on the oil filter mounting.

(d) Lubricate the filter rubber gasket with clean engine oil.

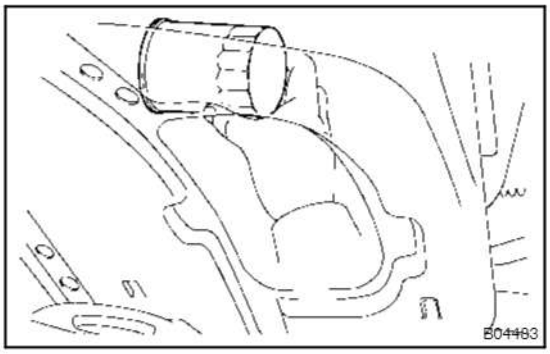

(e) Tighten the oil filter by hand until the rubber gasket contacts the seat of the filter mounting.

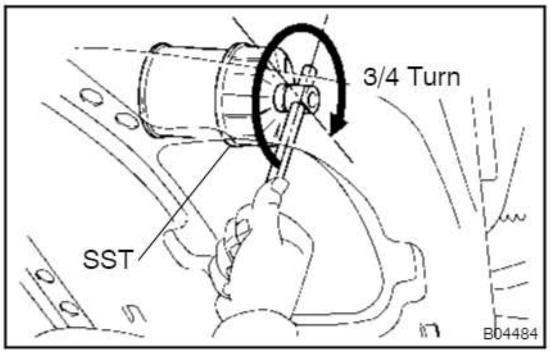

(f) Using SST, give it an additional 3/4 turn to seat the filter.
SST 09228–07501

3. FILL WITH ENGINE OIL

(a) Clean and install the oil drain plug with a new gasket.
Torque: 39 N·m (400 kgf·cm, 29 ft·lbf)

(b) Fill with new engine oil.
Capacity:
Drain and refill:
w/ Oil filter change: 6.8 liters (7.2 US qts, 6.0 Imp. qts)
w/o Oil filter change: 6.4 liters (6.8 US qts, 5.6 Imp. qts)
Dry fill: 8.0 liters (8.5 US qts, 7.0 Imp. qts)

(c) Reinstall the oil filler cap.

4. START ENGINE AND CHECK FOR ENGINE OIL LEAKS

5. RECHECK ENGINE OIL LEVEL

6. REINSTALL ENGINE UNDER COVER NO.3 AND SERVICE HOLE COVER

OIL PUMP

COMPONENTS

LU0D2–01

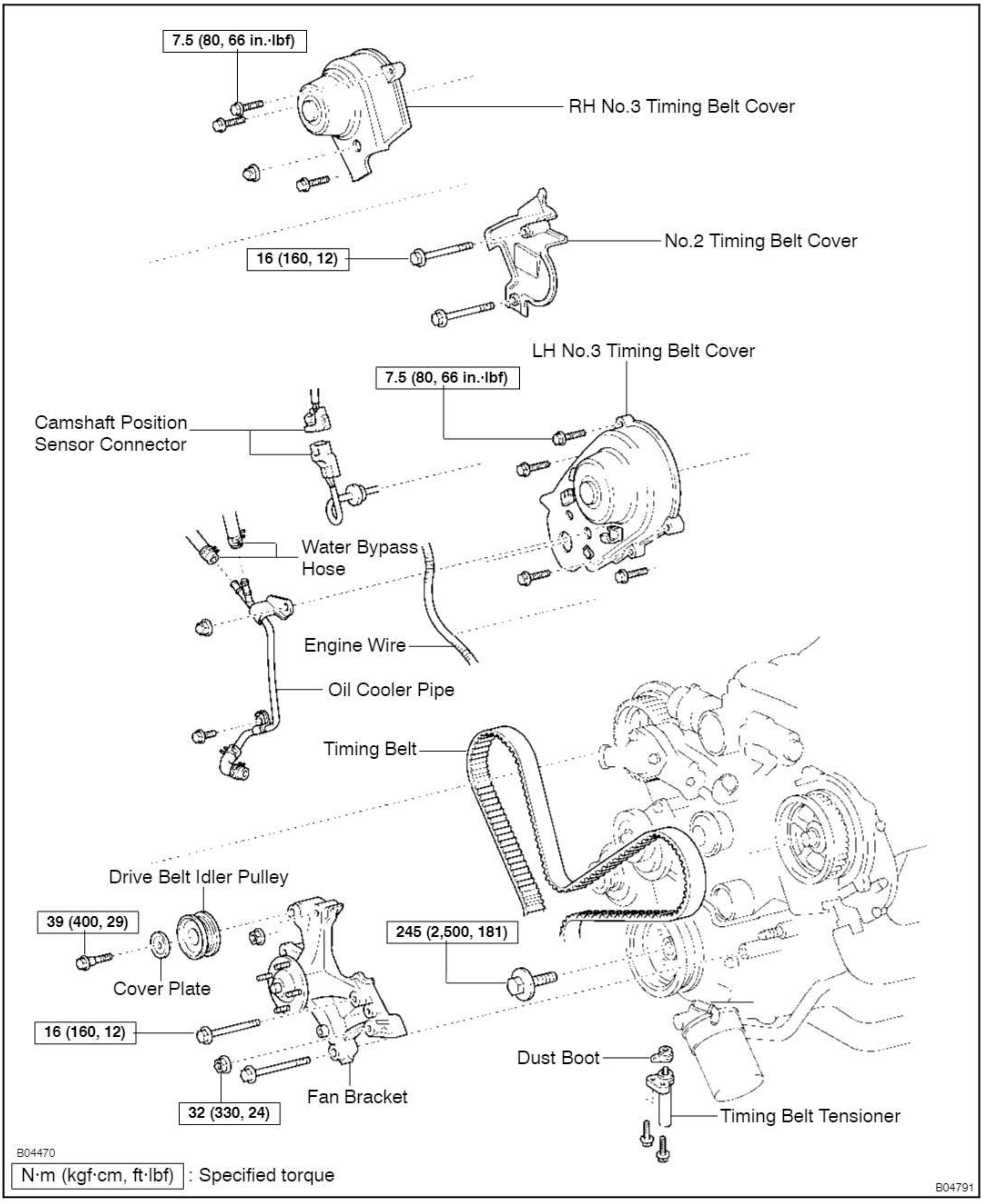

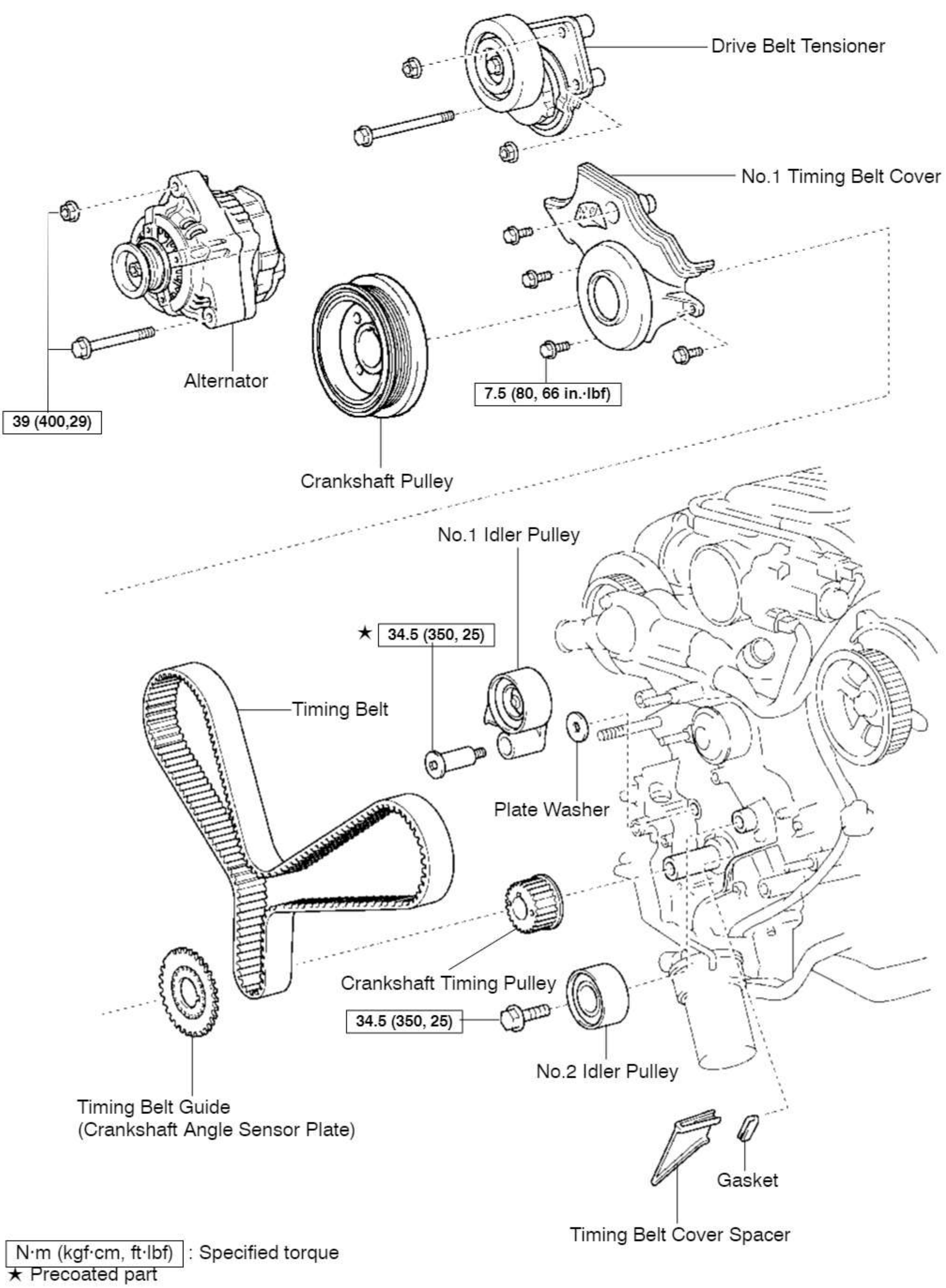

N·m (kgf·cm, ft·lbf) : Specified torque
★ Precoated part

B04472

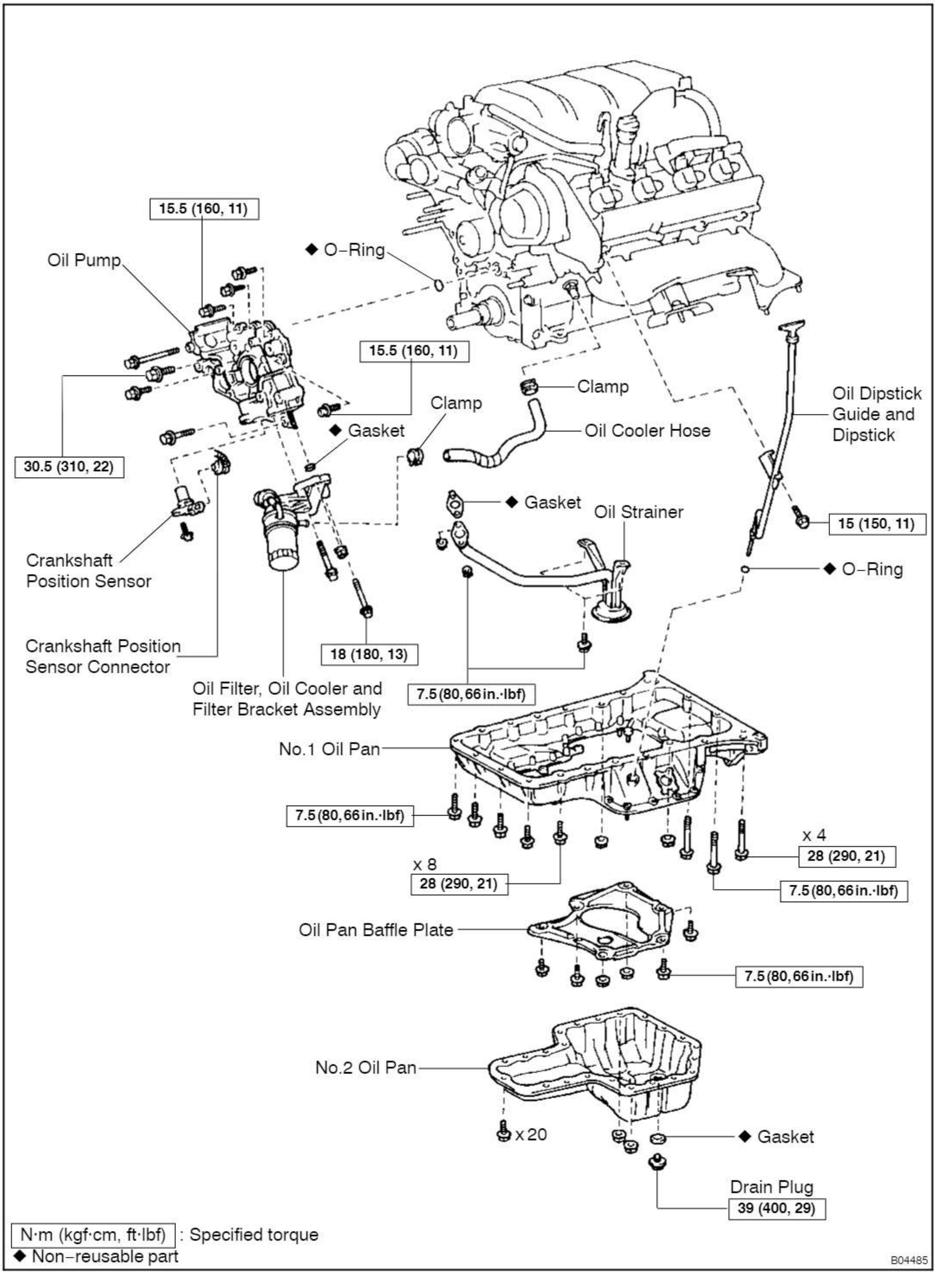
15.5 (160, 11)
Oil Pump
◆ O–Ring
15.5 (160, 11)
Clamp
Oil Dipstick Guide and Dipstick
Clamp
Oil Cooler Hose
◆ Gasket
30.5 (310, 22)
◆ Gasket
Oil Strainer
15 (150, 11)
Crankshaft Position Sensor
◆ O–Ring
Crankshaft Position Sensor Connector
18 (180, 13)
7.5 (80, 66 in.·lbf)
Oil Filter, Oil Cooler and Filter Bracket Assembly
No.1 Oil Pan
7.5 (80, 66 in.·lbf)
x 4
28 (290, 21)
x 8
28 (290, 21)
7.5 (80, 66 in.·lbf)
Oil Pan Baffle Plate
7.5 (80, 66 in.·lbf)
No.2 Oil Pan
x 20
◆ Gasket
Drain Plug
39 (400, 29)
N·m (kgf·cm, ft·lbf) : Specified torque
◆ Non–reusable part
B04485

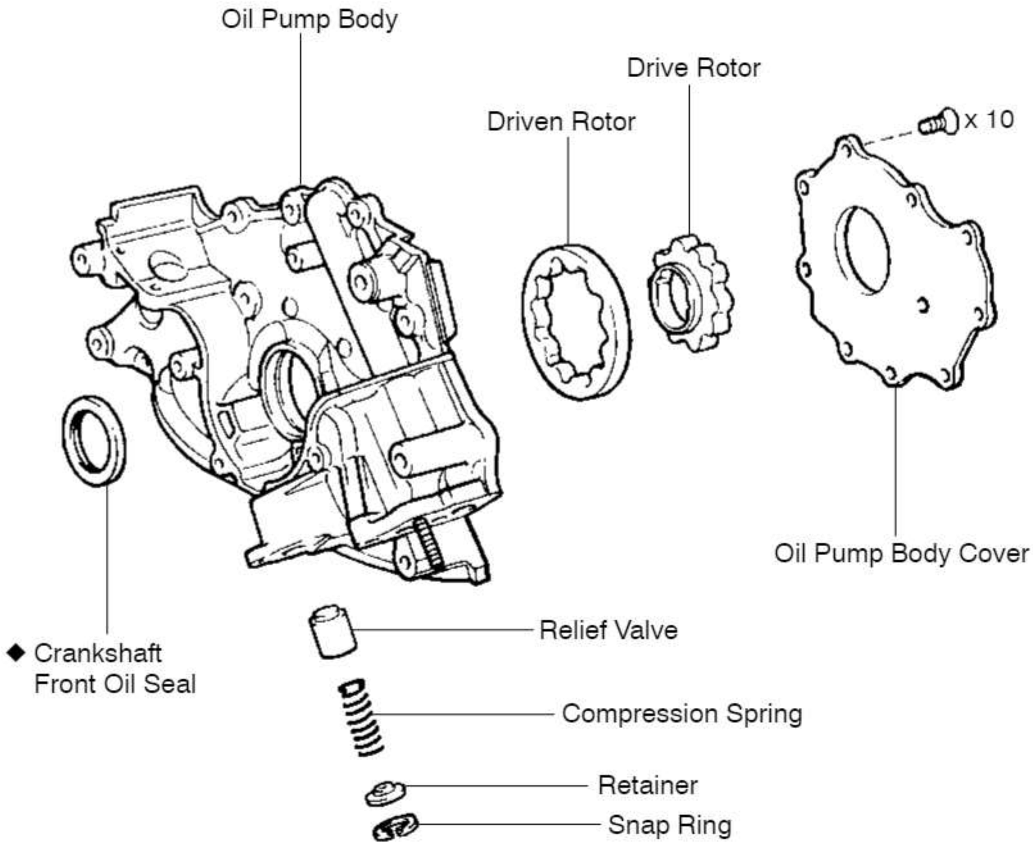

◆ Non−reusable part

LU0D3–01

REMOVAL

1. **REMOVE TIMING BELT (See page EM–16)**
2. **REMOVE NO.1 IDLER PULLEY (See page EM–16)**
3. **REMOVE NO.2 IDLER PULLEY (See page EM–16)**
4. **REMOVE CRANKSHAFT TIMING PULLEY (See page EM–16)**

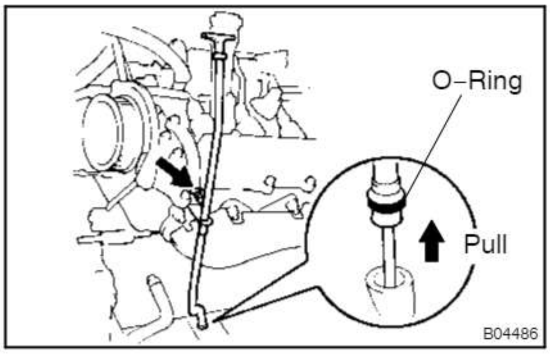

5. **REMOVE OIL DIPSTICK GUIDE**

(a) Remove the bolt holding the oil dipstick to the LH cylinder head.

(b) Pull out the dipstick guide together with the dipstick from the No.1 oil pan.

(c) Remove the O–ring from the dipstick guide.

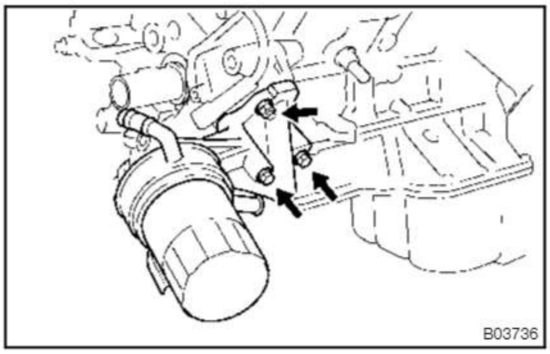

6. **REMOVE OILFILTER, OIL COOLER AND FILTER BRACKET ASSEMBLY**

(a) Disconnect the oil cooler hose.

(b) Disconnect the oil pressure switch connector.

(c) Remove the stud bolt, bolt, nut and the oil filter, oil cooler and filter bracket assembly.

(d) Remove the gasket from the filter bracket.

7. **REMOVE CRANKSHAFT POSITION SENSOR (See page IG–13)**

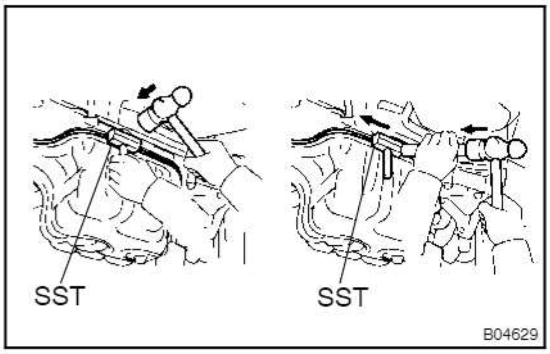

8. **REMOVE NO.2 OIL PAN**

(a) Remove the 20 bolts and 2 nuts.

(b) Insert the blade of SST between the No.1 and No.2 oil pans, cut off applied sealer and remove the No.2 oil pan.
SST 09032–00100

NOTICE:

- **Be careful not to damage the No.2 oil pan contact surface of the no.1 oil pan.**
- **Be careful not to damage the No.2 oil pan flange.**

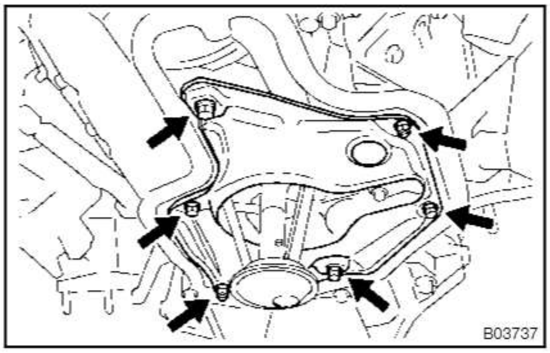

9. **REMOVE OIL PAN BAFFLE PLATE**

Remove the 4 bolts, 2 nuts and baffle plate.

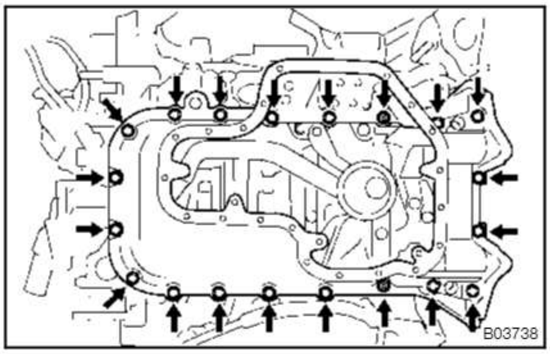

10. REMOVE NO.1 OIL PAN

(a) Remove the 17 bolts and 2 nut.

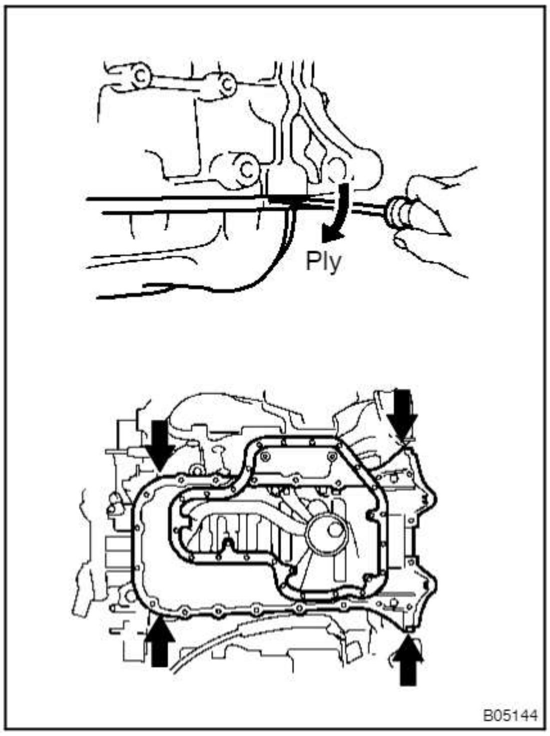

(b) Using a screwdriver, remove the No.1 oil pan by plying between the oil pan and cylinder block in the sequence shown.

NOTICE:

Be careful not to damage the contact surface of the cylinder block and No.1 oil pan.

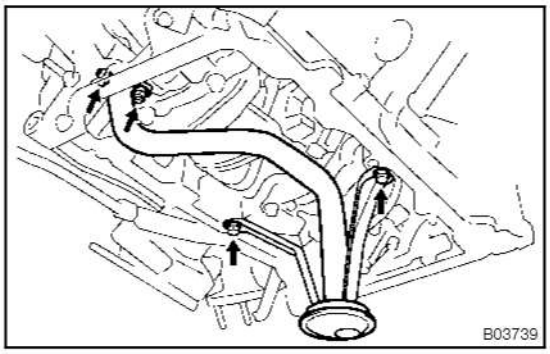

11. REMOVE OIL STRAINER

Remove the 2 bolts, 2 nuts, oil strainer and gasket.

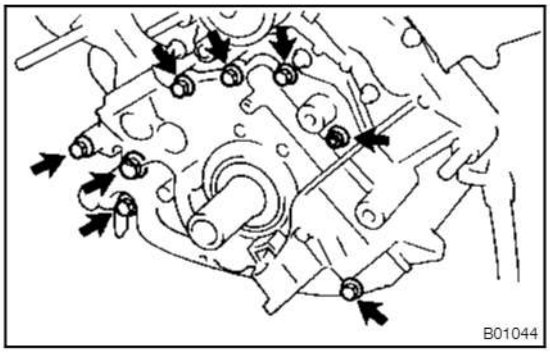

12. REMOVE OIL PUMP

(a) Remove the 8 bolts.

HINT:

Use a 6 mm hexagon wrench for the hexagon head bolt.

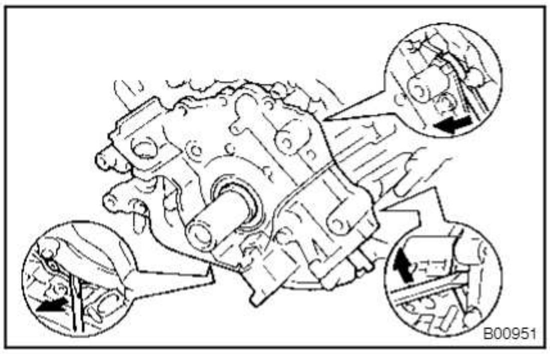

(b) Using a screwdriver, remove the oil pump by plying the portions between the oil pump and cylinder block.

NOTICE:

Be careful not to damage the contact surface the cylinder block and oil pump.

(c) Remove the O–ring from the cylinder block.

LU0D4–01

DISASSEMBLY

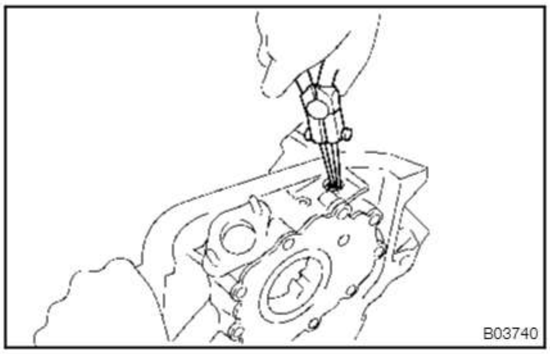

1. REMOVE RELIEF VALVE

(a) Using snap ring pliers, remove the snap ring.
(b) Remove the retainer, spring and relief valve.

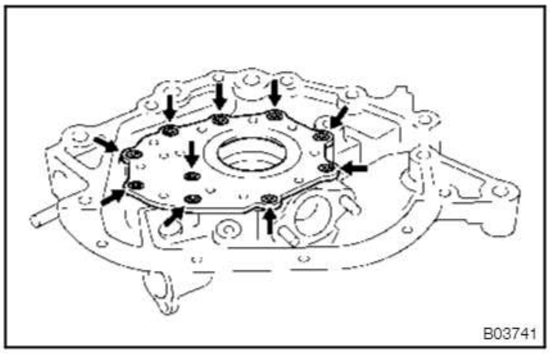

2. REMOVE DRIVE AND DRIVEN ROTOR

Remove the 10 screws, pump body cover, the drive and driven rotors.

LU0D5–01

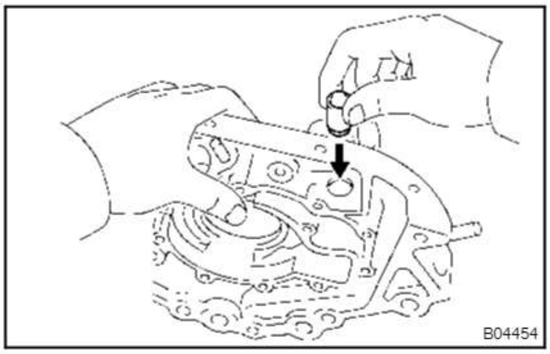

INSPECTION

1. INSPECT RELIEF VALVE

Coat the valve with engine oil and check that it falls smoothly into the valve hole by its own weight.

If it doesn't, replace the relief valve. If necessary, replace the oil pump body.

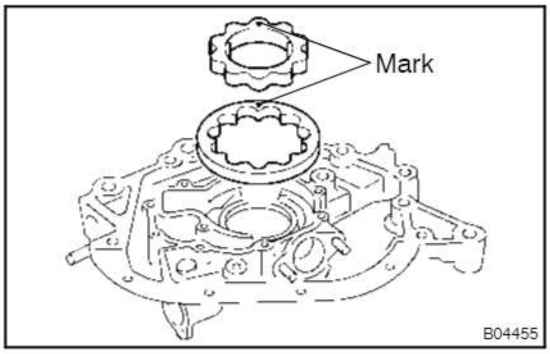

2. INSPECT DRIVE AND DRIVEN ROTORS INTO OIL PUMP BODY

Place the drive and driven rotors into the oil pump body with the mark facing upward.

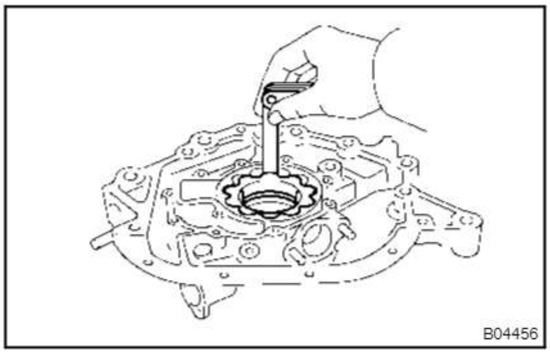

3. INSPECT ROTORS FOR TIP CLEARANCE

Using a feeler gauge, measure the clearance between the drive and driven rotor tips.

Standard tip clearance:
0.110 – 0.240 mm (0.0043 – 0.0094 in.)
Maximum tip clearance: 0.35 mm (0.0138 in.)

If the tip clearance is greater than maximum, replace the rotors as a set.

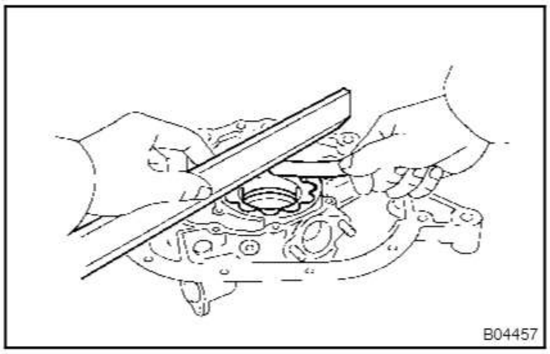

4. INSPECT ROTORS FOR SIDE CLEARANCE

Using a feeler gauge and precision straight edge, measure the clearance between the rotors and precision straight edge.

Standard side clearance:
0.030 – 0.090 mm (0.0012 – 0.0035 in.)
Maximum side clearance: 0.15 mm (0.0059 in.)

If the side clearance is greater than maximum, replace the rotors as a set. If necessary, replace the oil pump assembly.

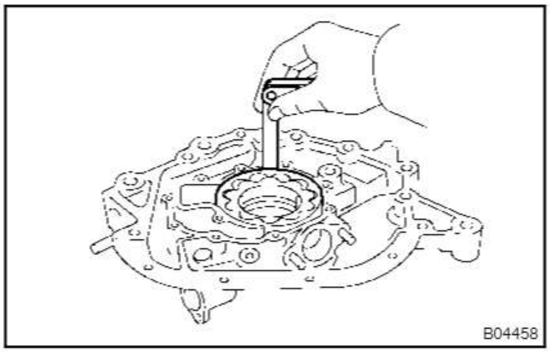

5. INSPECT ROTOR FOR BODY CLEARANCE

Using a feeler gauge, measure the clearance between the drive and driven rotor and body.

Standard body clearance:
0.100 – 0.175 mm (0.0039 – 0.0069 in.)
Maximum body Clarence: 0.30 mm (0.0118 in.)

If the body clearance is greater than maximum, replace the rotors as a set. If necessary, replace the oil pump body.

6. REMOVE DRIVE AND DRIVEN ROTORS

REPLACEMENT

REPLACE CRANKSHAFT OIL SEAL (See page EM–86)

LU0D7–01

REASSEMBLY

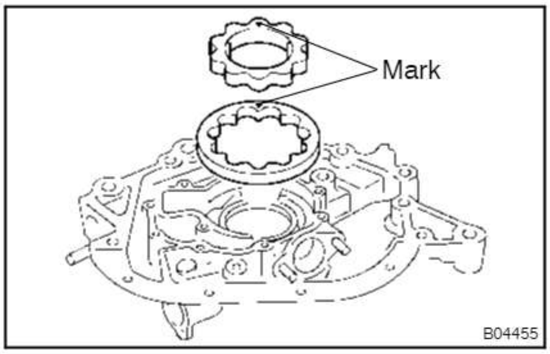

1. INSTALL DRIVE AND DRIVEN ROTORS

(a) Place the drive and driven rotors into pump body with the marks facing the pump body cover side.

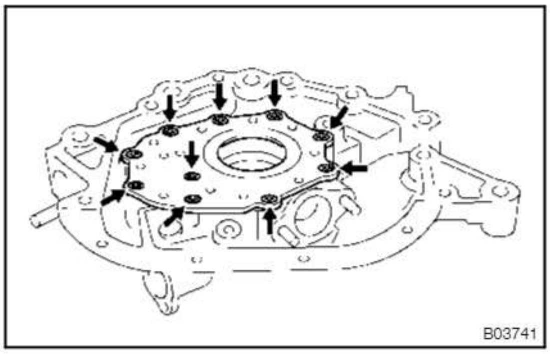

(b) Install the pump body cover with the 10 screws.
Torque: 10 N·m (105 kgf·cm, 7 ft·lbf)

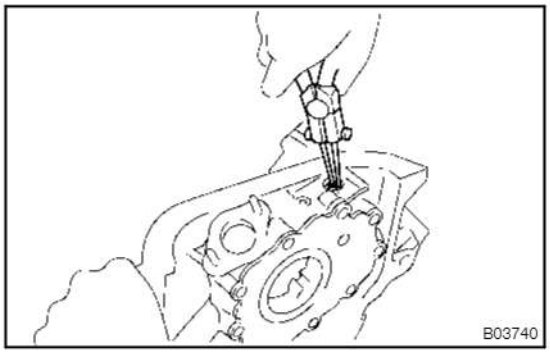

2. INSTALL RELIEF VALVE

(a) Insert the relief valve, spring and retainer into the oil pump body hole.

(b) Using snap ring pliers, install the snap ring.

LU0D6–01

INSTALLATION

1. INSTALL OIL PUMP

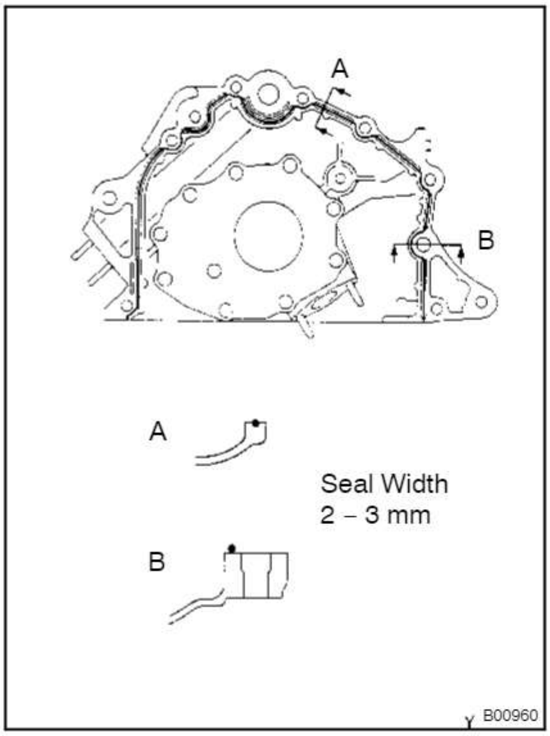

(a) Remove any old packing (FIPG) material and be careful not to drop any oil on the contact surface of the oil pump and cylinder block.

- Using a razor blade and gasket scraper, remove all the old packing (FIPG) material from the gasket surfaces and sealing groove.
- Thoroughly clean all components to remove all the loose material.
- Using a non–residue solvent, clean both sealing surfaces.

(b) Apply seal packing to the oil pump as shown in the illustration.

Seal packing: Part No. 08826–00080 or equivalent

NOTICE:

Avoid applying an excessive amount to the surface. Be particularly careful near oil passage.

- Install a nozzle that has been cut to a 2 – 3 mm (0.08 – 0.12 in.) opening.
- Parts must be assembled within 5 minutes of application. Otherwise the material must be removed and reapplied.
- Immediately remove nozzle from the tube and reinstall cap.

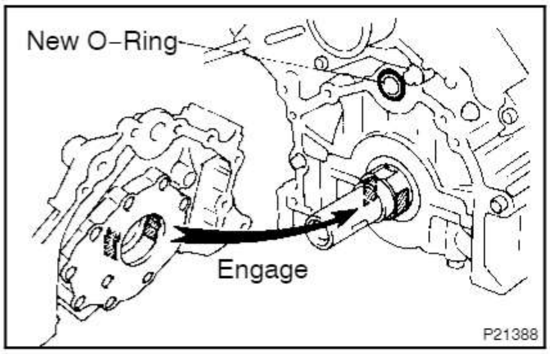

(c) Install a new O–ring to the cylinder block.

(d) Engage the spline teeth of the oil pump drive gear with the large teeth of the crankshaft, and slide the oil pump on the crankshaft.

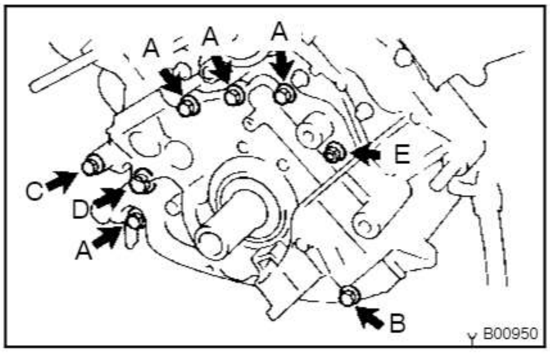

(e) Install the oil pump with the 8 bolts. Uniformly tighten the bolts in several passes.

Torque:
15.5 N·m (160 kgf·cm, 11 ft·lbf)
for 12 mm head and 6 mm hexagon head
30.5 N·m (310 kgf·cm, 22 ft·lbf) for 14 mm head

HINT:

- Use a 6 mm hexagon wrench for the hexagon head bolt.
- Each bolt length is indicated in the illustration.
  Bolt length:

35 mm (1.38 in.) for A of 12 mm head
50 mm (1.97 in.) for B of 12 mm head
106 mm (4.17 in.) for C of 12 mm head
44 mm (1.73 in.) for D of 14 mm head
28 mm (1.10 in.) for E of 6 mm hexagon head

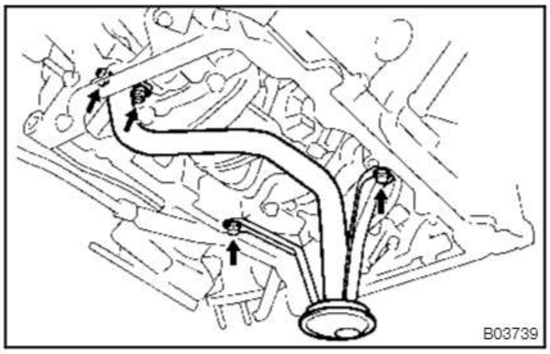

2. INSTALL OIL STRAINER

Install a new gasket and the oil strainer with the 2 bolts and 2 nuts.

Torque: 7.5 N·m (80 kgf·cm, 66 in.·lbf)

HINT:

Use bolt 12 mm (0.47 in.) in length.

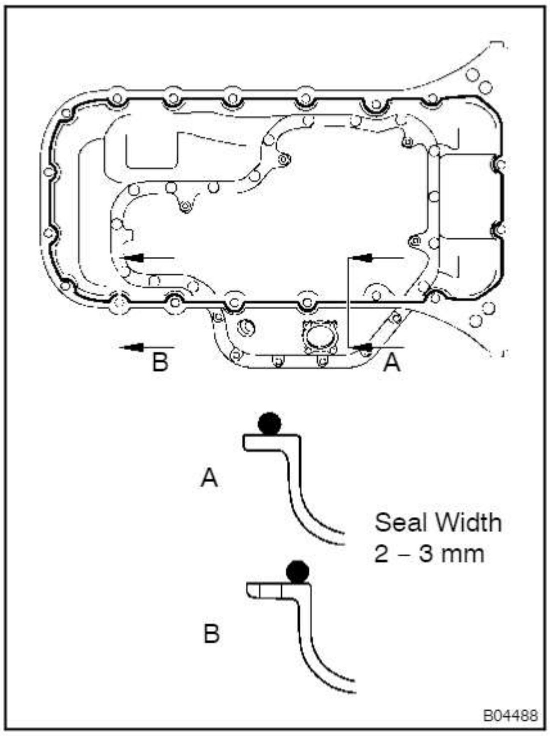

3. INSTALL NO.1 OIL PAN

(a) Remove any old packing (FIPG) material and be careful not to drop any oil on the contact surfaces of the No.1 oil pan, cylinder block, oil pump and rear oil seal retainer.

- Using a razor blade and gasket scraper, remove all the old packing (FIPG) material from the gasket surfaces and sealing groove.
- Thoroughly clean all components to remove all the loose material.
- Using a non–residue solvent, clean both sealing surface.

(b) Apply seal packing to the No.1 oil pan as shown in the illustration.

Seal packing: Part No. 08826–00080 or equivalent

- Install a nozzle that has been cut to a 3 – 5 mm (0.12 – 0.20 in.) opening.
- Parts must be assembled within 5 minutes of application. Otherwise the material must be removed and reapplied.
- Immediately remove nozzle from the tube and reinstall cap.

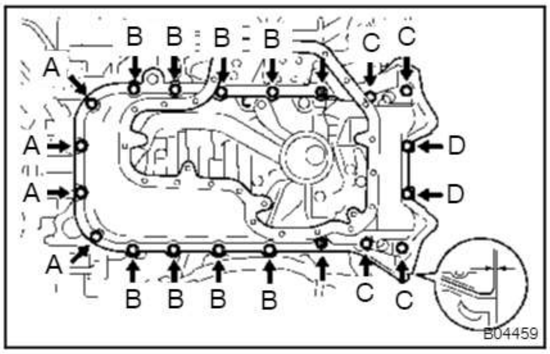

(c) Temporarily install the No.1 oil pan with the 18 bolts, stud bolt and 2 nuts.

HINT:

Each bolt length is indicated in the illustration.

Bolt Length:

20 mm (0.79 in.) for A of 10 mm head

25 mm (0.98 in.) for B of 12 mm head

60 mm (2.36 in.) for C of 12 mm head

35 mm (1.38 in.) for D of 10 mm head

(d) Set the No.1 oil pan as shown in the illustration.

NOTICE:

Make sure the clearance between the rear ends of the No.1 oil pan and cylinder block is 0.2 mm (0.008 in.) or less. If the clearance is more than 0.2 mm (0.008 in.), the No.1 oil pan will be stretched.

(e) Uniformly tighten the bolts, stud bolts and nuts in several passes.

Torque:

7.5 N·m (80 kgf·cm, 66 in.·lbf) for 10 mm head

28 N·m (290 kgf·cm, 21 ft·lbf) for 12 mm head

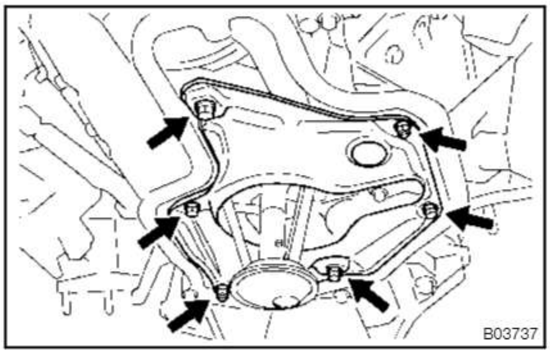

4. INSTALL OIL PAN BAFFLE PLATE

Install the baffle plate with 4 bolts and 2 nuts.

Torque: 7.5 N·m (80 kgf·cm, 66 in.·lbf)

HINT:

Use bolts 12 mm (0.47 in.)in length.

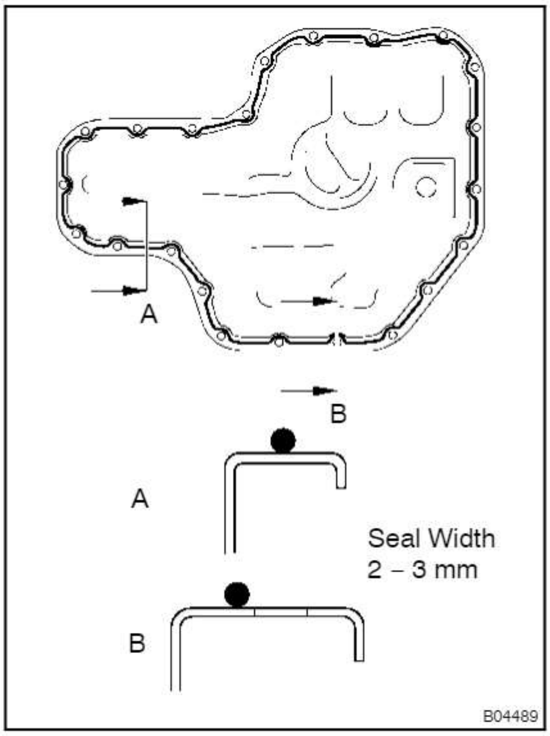

5. INSTALL NO.2 OIL PAN

(a) Remove any old packing (FIPG) material and be careful not to drop any oil on the contact surfaces of No.1 and No.2 oil pans.

- Using a razor blade and gasket scraper, remove all the old packing (FIPG) material from the gasket surfaces and sealing groove.
- Thoroughly clean all components to remove all the loose material.
- Using a non–residue solvent, clean both sealing surfaces.

NOTICE:

Do not use a solvent which will affect the painted surfaces.

(b) Apply seal packing to the No.2 oil pan as shown in the illustration.

Seal packing: Part No. 08826–00080 or equivalent

- Install a nozzle that has been cut to a 3 – 5 mm (0.12 – 0.20 in.) opening.

- Parts must be assembled within 5 minutes of application. Otherwise the material must be removed and reapplied.
- Immediately remove nozzle from the tube and reinstall cap.

(c) Install the No.2 oil pan with the 20 bolts and 2 nuts. Uniformly tighten the bolts and nuts in several passes.

Torque: 7.5 N·m (80 kgf·cm, 66 in.·lbf)

HINT:

Use bolts 14 mm (0.55 in.) in length

6. INSTALL CRANKSHAFT POSITION SENSOR (See page IG–14)

7. INSTALL OIL FILTER, OIL COOLER AND FILTER BRACKET ASSEMBLY

(a) Install a new gasket to the oil filter bracket.

(b) Install the oil filter, oil cooler and filter bracket assembly with the stud bolt, bolt and nut.

Torque: 18 N·m (185 kgf·cm, 13 ft·lbf)

(c) Connect the oil pressure switch connector.

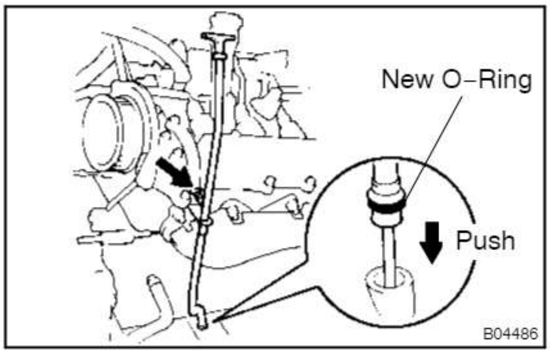

8. INSTALL OIL DIPSTICK AND DIPSTICK

(a) Install a new O–ring to the dipstick guide.

(b) Apply soapy water to the O–ring.

(c) Push in the dipstick guide end into the guide hole of the No.1 oil pan.

(d) Install dipstick guide with the bolt.

Torque: 15 N·m (155 kgf·cm, 11 ft·lbf)

(e) Install the dipstick.

9. INSTALL CRANKSHAFT TIMING PULLEY (See page EM–23)

10. INSTALL NO.1 IDLER PULLEY (See page EM–23)

11. INSTALL NO.2 IDLER PULLEY (See page EM–23)

12. INSTALL TIMING BELT (See page EM–23)

OIL COOLER

COMPONENTS

LU0D9–01

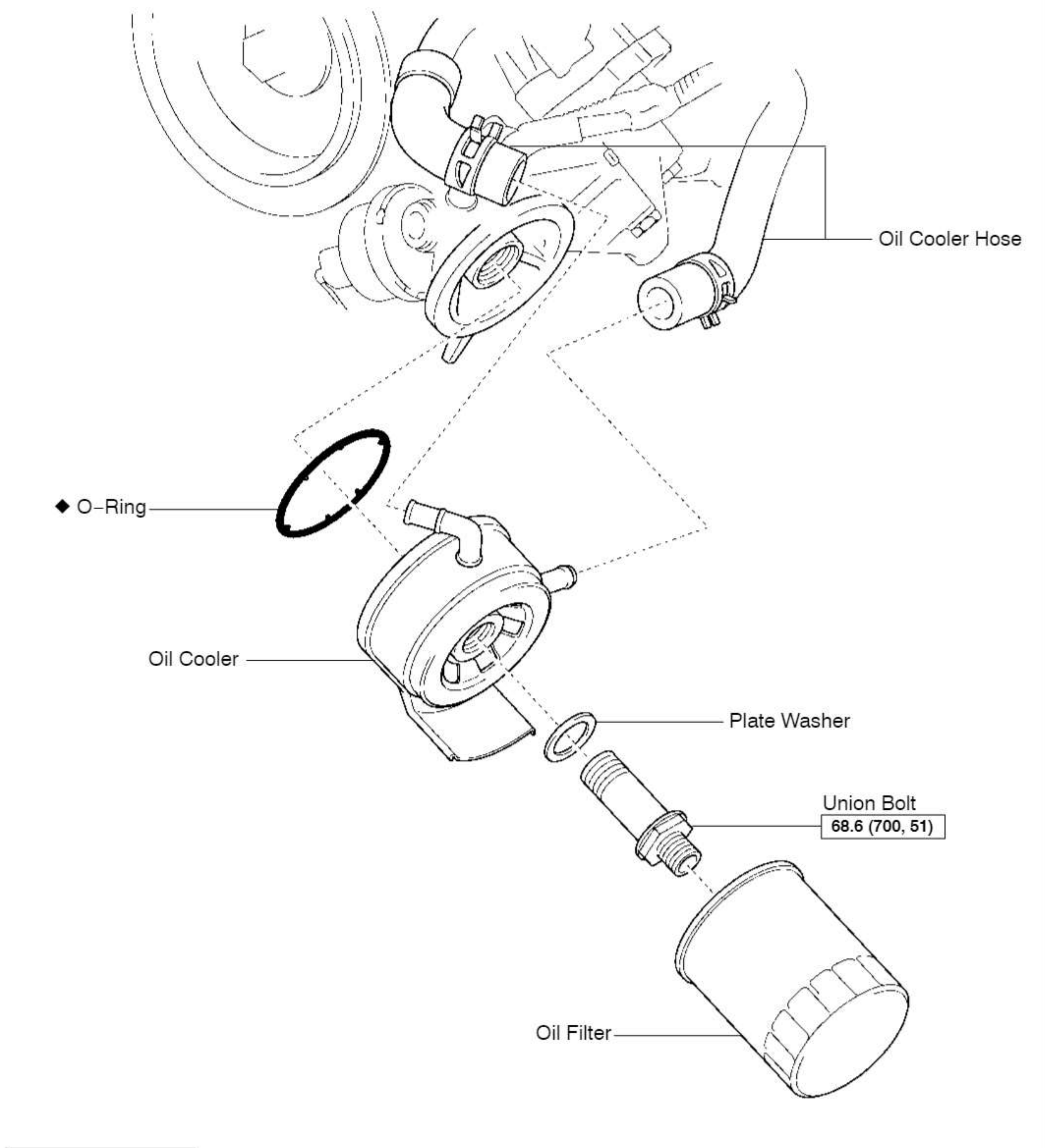

N·m (kgf·cm, ft·lbf) : Specified torque
◆ Non–reusable part

B04473

LU0DA–01

REMOVAL

1. **DRAIN ENGINE COOLANT**
2. **REMOVE OIL FILTER (See page LU–2)**

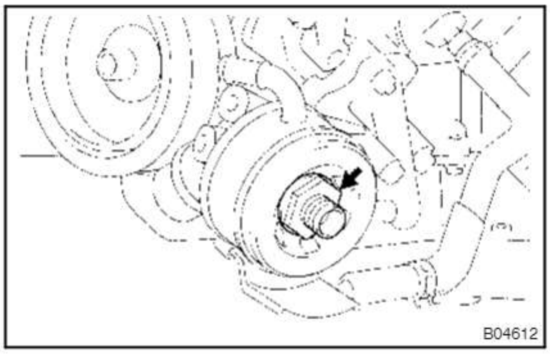

3. **REMOVE OIL COOLER**

(a) Disconnect the 2 oil cooler hoses from the oil cooler.

(b) Remove the union bolt, plate washer and oil cooler.

(c) Remove the O–ring from the oil cooler.

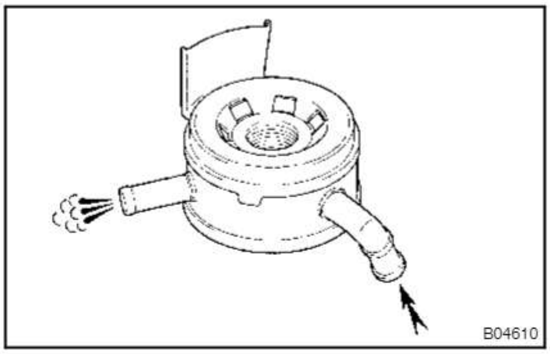

INSPECTION

INSPECT OIL COOLER

Check the oil cooler for damage or clogging.
If necessary, replace the oil cooler.

INSTALLATION

1. INSTALL OIL COOLER

(a) Clean the oil cooler contact surface on the oil cooler mounting.

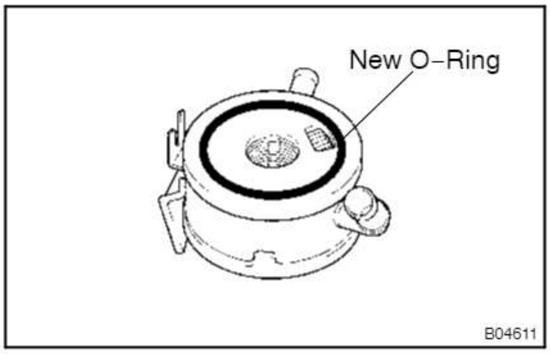

(b) Install a new O–ring to the oil cooler.

(c) Apply a light coat of engine oil on the threads and under the head of the union bolt.

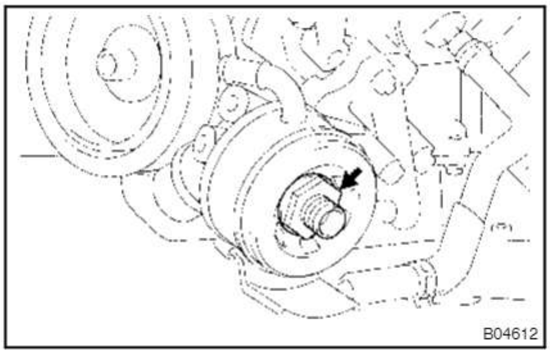

(d) Install the plate washer and union bolt.

Torque: 78.5 N·m (800 kgf·cm, 58 ft·lbf)

(e) Connect the 2 oil cooler hoses to the oil cooler.

2. INSTALL OIL FILTER(See page LU–2)

3. FILL WITH ENGINE COOLANT

4. START ENGINE AND CHECK FOR ENGINE COOLANT AND ENGINE OIL LEAKS.

5. CHECK ENGINE OIL LEVEL